BEFORE THE COUNCIL OF THE
METROPOLITAN SERVICE DISTRICT

FOR THE PURPOSE OF AMENDING THE CLASSIFICATION AND PAY PLANS FOR THE METROPOLITAN SERVICE DISTRICT	))))	RESOLUTION NO. 85-573 Introduced by the Executive Officer

WHEREAS, Ordinance No. 81-116 adopted Personnel Rules of the Metropolitan Service District (Metro) which requires the establishment and maintenance of a Classification Plan and Pay Plan; and

WHEREAS, The need has been established for the new classification and positions of Personnel Officer, Data Processing Manager, and Information Systems Analyst; now, therefore,

BE IT RESOLVED,

1. That pursuant to Sections 24 & 26 of the Personnel Rules, the Classification Plan is amended effective June 1, 1985, to include the classification specifications attached hereto as Attachment "B."

2. That Table A of the Pay Plan is amended to include the classifications of Personnel Officer at salary range 12.5; Data Processing Manager at salary range 13.5; and Information Systems Analyst at salary range 9.0.

3. That positions in these classifications shall be exempt for purposes of overtime compensation pursuant to ORS 279.340 and 279.342.

ADOPTED by the Council of the Metropolitan Service District this 13th day of June, 1985.

Richard Waker,
Vice Presiding Officer

JS/gl
3580C/411-3

Metro
Classification No.: 091

Established:
Revised:
EEO:
AA: Official/Manager

DATA PROCESSING MANAGER

MISSION STATEMENT

Under general direction to plan, organize and direct the activities of the automated information systems for use by and between departments of Metro. To provide oversight for the maintenance of existing systems and for improvements as needed and as appropriate; to provide needs assessment services and recommendations for the implementation of new information systems based on state of the art hardware and software technology.

DISTINGUISHING CHARACTERISTICS

This is an administrative and professional position directing the activities of a division. An employee in this class has direct responsibility for recommending courses of action for existing and new systems, establishing strategies to put data processing techniques to better use for the organization and conducting special studies as needed. The primary responsibility is systems development, including work plan preparation and directing a staff in performing problem definition, systems analysis and design, documentation, forms design, preparing program specifications, and design innovations to improve or extend the capabilities of existing data systems. Direction is received from Metro's Deputy Executive Officer.

PRINCIPAL FUNCTIONS

Duties include but are not limited to:

1. System Planning and Development

   Typical Activities:

   - Evaluates new technologies and develops strategies to take advantage of their corresponding benefits.
   - Defines scope of system to be developed, delineates tasks, and subsystem breakdowns.
   - Coordinates and monitors all aspects of soliciting, reviewing, selecting, hiring and monitoring performance of vendors providing automated program or equipment services.
   - Initiates, directs and monitors division efforts in problem definition, system analysis and design, documentation, forms design, and preparation of program specifications.

2. Work Direction

Typical Activities:

- Exercises direct supervision over information processing technical, programming and development staff.
- Conducts regularly scheduled and issue-centered staff meetings relative to existing or developing automated program improvements.
- Initiates and directs performance appraisals.
- Directs the organization, coordination and implementation of hiring, promoting and assigning subordinate staff in accordance with Metro adopted EEO and personnel policies.

3. Consultation and Evaluation

Typical Activities:

- Consults with department heads and supervisors regarding information processing needs.
- Develops training and information services to appropriate management staff to assist in decision-making, implementation and operations of computerized functions.
- Advises appropriate staff on the impact of information processing applications on organizational structure and on individual positions.
- May negotiate contracts for, and does direct activities of, equipment acquisition and installation, scheduling, testing and facility suitability.
- Evaluates the feasibility of developing systems, determines priorities for application and correllates decisions with Metro capabilities.

4. Administration

Typical Activities:

- Prepares and submits budget, and monitors expenditures relative to performance indicators.
- Maintains direct control of system and data processing activities involving a significant risk of operational or financial difficulties.
- Responsibility and accountability in developing staff work plans, program logic, coding, testing and debugging, documentation and implementation of the system of programs.
- Identifies costs for work performed by staff and use of equipment, and provides monthly rate/expenditure/budgeting reports accordingly.
- Establishes and applies policies, standards and rationale for users and Executive Management and provides report as required.

REQUIRED KNOWLEDGE AND SKILLS

Substantial Knowledge Of:

Management practices and principles as applied to direction of a data processing staff; financial management and analysis and project management techniques.

Considerable Knowledge Of:

Software applications to operating systems; data base systems; data communications systems; system utilities and components; language systems; report and graphic writers.

Skill To:

Develop structured methodologies, backup/recovery procedures, data security measures, and interactive system operation; analyse organizational needs and develop operational and strategic planning improvements; communicate effectively both orally and in writing to a variety of people representing various levels of understanding and responsibility; prepare and present entity diagrams, dataflow diagrams, program specifications and applicable short- and long-range associated costs.

Ability To:

Become familiar with Metro staff, procedures, policies and existing automated data systems; review technical, organization and economic aspects of data systems and effectively relate to and interpret for user management the status and potential improvements of systems; establish and maintain effective working relationships with subordinates.

WORKING CONDITIONS

Duties are performed primarily indoors and are of a sedentary nature.

DK/srs
2944C/377-3
05/21/85

Metro
Classification No.: 070

Established:
Revised:
EEO:
AA: Professional

PERSONNEL OFFICER

MISSION STATEMENT

Under general direction to develop and conduct various human resources and personnel administration programs and services; to perform and present complex studies, surveys, and special projects; to provide work direction to assistants; and to do other work as required.

DISTINGUISHING CHARACTERISTICS

The Personnel Officer classification is a seasoned professional class that is responsible for providing the full range of personnel/human resources services to Metro. Functions include: recruitment, Affirmative Action, classification/job evaluation, compensation administration, benefits administration, and employee/labor relations. This class differs from the lower level Personnel Analyst which requires more supervision and direction, and has more limited, narrower work assignments requiring less experience.

PRINCIPAL FUNCTIONS

Duties include but are not limited to:

1. RECRUITING

   Typical Activities:

   - Confers with managers to determine staffing needs and recruiting strategies; develops selection criteria and issues job announcements, conforming to agency guidelines, Affirmative Action policies, etc.

   - Reviews and screens applicants according to selection guidelines, pertinent laws, and agency policies.

   - Formally notifies all candidates of recruitment results; serves as initial contact for complaints regarding recruiting problems, issues, etc.; serves as the agency's official contact regarding formal Affirmative Action or alleged discrimination complaints.

2. CLASSIFICATION/JOB EVALUATION

Typical Activities:

- Conducts classification studies; gathers and analyzes pertinent supporting documentation.

- Evaluates, writes new/revised jobs according to internal value and equity criteria; recommends salary ranges based upon the job evaluation methodology.

- Oversees, coordinates any appeals based upon perceived classification errors, misunderstanding; notifies affected employees of final decisions, salary implications, etc.

- Conducts salary surveys to assure competitiveness and alignment with Metro's compensation philosophy and overall mission, administers Metro's pay plan.

3. AFFIRMATIVE ACTION

Typical Activities:

- Serves as Metro's Affirmative Action Officer.

- Develops Metro's Affirmative Action Plan, goals and policies; monitors, reports on agency's progress and efforts; recommends changes in strategy regarding EEO/AA efforts and results.

4. ADMINISTRATIVE FUNCTIONS

Typical Activities:

- Oversees and coordinates benefits contracts and programs, including Workers' Compensation.

- Provides work direction and training to other staff in technical personnel/human resources assignments and projects.

- Monitors and prepares budget information for the personnel unit as needed.

- Analyzes and recommends changes to personnel policies as needed or requested.

- Oversees official personnel records; reviews and processes transactions.

- Supervises and evaluates employees of the Personnel Office.

- Coordinates agency safety program, assists in compliance activities.

5. EMPLOYEE/LABOR RELATIONS

Typical Activities:

- Reviews, interprets the intent of labor contracts personnel rules, and human resources policies.

- May provide short-term counseling to troubled employees; refers serious matters to trained professionals.

- Collects, prepares wage and salary data studies, benefits studies as needed or requested.

- Participates in labor negotiations and contract analysis.

REQUIRED KNOWLEDGE AND SKILLS

Working knowledge of:

Principles of public personnel administration and contemporary human resources issues, practices; principles, concepts, and practices relating to merit system policy with respect to employment issues (recruiting, promotion, training, etc.); principles, practices and laws pertaining to collective bargaining; research and analysis techniques, methodologies; principles and concepts of job evaluation systems, salary administration practices, and related issues; effective employee relations practices. Current laws and regulations pertaining to Workers' Compensation, Affirmative Action, employee benefits and personnel administration.

Skill To:

Collect, organize and analyze data, and formulate/develop recommendations based upon findings and analysis; communicate effectively in writing, verbally, and through formal presentations; conduct investigations, research problems, etc. to resolve or prevent formal complaints, litigation, appeals, etc.; act as a strategic resource to both management and employees in improving Metro's personnel services; establish, maintain effective working relationships with a variety of people, including the public.

WORKING CONDITIONS

The majority of duties are performed indoors and are of a sedentary nature.

JS/srs
3591C/377-3
05/21/85

Metro
Classification No.: 634

Established:
Revised:
EEO:
AA: Admin. Support

INFORMATION SYSTEMS ANALYST

MISSION STATEMENT

Under direction exercises skilled work in developing, coding and testing computer programs in a variety of fields, such as management, personnel, budget and other agency information systems.

DISTINGUISHING CHARACTERISTICS

The analyst is primarily focused on assisting program analysts or a program manager in establishing job requirements, processing specifications and other data inputting for construction of standard programs for processing data of chart results. This position differs from an entry-level training position in that, due to experience, close supervision is not required.

PRINCIPAL FUNCTIONS

Duties include but are not limited to:

1. Program Development

   Typical Activities:

   - Prepares and analyzes detailed flow charts for programs representing each logical step in the solution of a problem.
   - Translates detailed flow charts into computer programs.
   - Prepares and codes instructions using one of several program languages.
   - Documents programs for use by others by developing such items as charts, written listings, and formats for input and output.
   - Presents proposed system to user departments.

2. Program Operation

   Typical Activities:

   - Assists in analysis of job execution problems.
   - Recommends scheduling or program changes and equipment upgrade.

- Assists in monitoring production work flow and job execution for teleprocessing and batch activities.
- Maintains adequate supply inventory.
- Instructs agency personnel on operational procedures.
- Coordinates with appropriate manufacturers the resolution of operation problems.
- Assists in writing procedures for implementation and use of system programs.
- Receives continued training in programming to remain current in the field.
- Assists with computer capacity analysis.

REQUIRED KNOWLEDGE AND SKILLS

Working Knowledge Of:

Computer programming techniques, languages and basic equipment; block diagramming, flow charting and card and form design. Knowledge of: documentation, scheduling, teleprocessing, and the operations and capabilities of modern data processing equipment.

Skill To:

Interpret and follow complex oral and written instructions and guidelines; analyze and interpret operational and scheduling problems in data processing.

Ability to: establish and maintain effective working relationships with data processing users, employees and other technicians in the field; write clear reports and logs on computer operations and productivity; quickly learn procedures and requirements of the organization.

WORKING CONDITIONS

Duties are performed primarily indoors and are of a sedentary nature.

DK/srs
3570C/377-3
05/21/85

STAFF REPORT

Agenda Item No. 6.2

Meeting Date June 13, 1985

CONSIDERATION OF RESOLUTION NO. 85-573 AMENDING THE CLASSIFICATION AND PAY PLANS

Date: May 29, 1985 Presented by: Jennifer Sims

FACTUAL BACKGROUND AND ANALYSIS

It has been proposed that improvements be made to the Finance and Administration Department in the areas of Personnel and Data Processing. Specifically, the proposal is to create and fill positions for three new classifications: Personnel Officer, Data Processing Manager, and Information Systems Analyst. A report detailing the needs and rationale is attached. This was first presented to the Council Management Committee at its February 21, 1985, meeting. It was decided then that the recommended changes should be considered in the FY 1985-86 budget process. The Budget Review Committee supported the proposal and the Council included the necessary funding in the Approved Budget.

Under the Personnel Rules, the Council must approve new classifications. Therefore, a supportive recommendation is sought on Resolution No. 85-573 establishing these three new classifications and amending the Pay Plan to include them.

EXECUTIVE OFFICER'S RECOMMENDATION

Recommend approval of Resolution No. 85-573 to the Council.

COUNCIL MANAGEMENT COMMITTEE'S RECOMMENDATION

The Council Management Committee recommended adoption of Resolution No. 85-573 at their meeting of May 23, 1985.

JS/gl
3619C/411-3
05/29/85

COMPARATIVE SALARIES
FOR
PERSONNEL OFFICER

Metro Proposal

Personnel Officer ($29,307-$36,712)
Supervises 2 people, up to 300 employees.

Gresham

Personnel Director ($36,276-$46,296)
Supervises 2.5 people, 200 employees.

Lake Oswego

Assistant City Manager/Finance & Administration Manager
($33,204-$42,972)
Has Personnel department supervisory responsibility along with other functional areas of responsibility. Not totally comparable to Metro's Personnel Officer position, 350 employees.

Beaverton

Personnel Director ($31,404-$40,080)
Supervises 4 people. Also has other functional areas of responsibility such as municipal court and clerical workers, 250 employees.

City of Portland

Personnel Analyst 2 ($27,914-$30,389)
Professional level with duties in recruitment, selection, classification, Affirmative Action, training and safety. No supervisory responsibilities.

Assistant Personnel Director ($36,920-$40,394)
Deputy Director for the City's Personnel Office.

JS/srs
3619C/411-2
05/21/85

COMPARATIVE SALARIES
FOR
DATA PROCESSING MANAGER

Metro Proposal

Data Processing Manager - ($32,302-$41,434)
Supervises 1.75 people.

Gresham

Data Processing Manager - ($34,560-$44,088)
Supervises 3.5 people.

City of Portland

Systems and Programming Manager - ($34,320-$39,395)
Coordinates systems with bureaus, plans and directs the design, programming, operation and maintenance of a major system or systems. Supervises programmers and clerical staff.

Computer Services Director ($46,300 flat rate)
Head of the City's Bureau of Computer Services.

Port of Portland

Systems Development Manager ($28,900-$47,400)
Systems Operation Manager
Under Data Processing Manager, responsible for computer systems planning, design and/or operation. Some supervisory responsibilities.

JS/srs
3619C/411-2
05/21/85

REVISED JANUARY 31, 1985

TABLE A

NON-UNION SALARY RANGE TABLE
(Metro Downtown, Gatehouse Sites)

Salary Range Number	Beginning Salary Rate		Entry Merit Rate		Maximum Merit Rate		Maximum Incentive Rate**	
	Annual	Hourly	Annual	Hourly	Annual	Hourly	Annual	Hourly
*0.0	7,529	3.62	7,883	3.79	9,152	4.40	9,443	4.54
0.5	9,090	4.37	9,547	4.59	11,211	5.39	11,565	5.56
1.0	9,672	4.65	10,150	4.88	11,690	5.62	12,022	5.78
1.5	10,130	4.87	10,629	5.11	12,251	5.89	12,626	6.07
2.0	10,566	5.08	11,066	5.32	12,813	6.16	13,187	6.34
2.5	11,107	5.34	11,794	5.67	13,437	6.46	13,853	6.66
3.0	11,690	5.62	12,272	5.90	14,040	6.75	14,477	6.96
3.5	12,251	5.89	12,854	6.18	14,830	7.13	15,267	7.34
4.0	12,813	6.16	13,458	6.47	15,558	7.48	16,037	7.71
4.5	13,437	6.46	14,102	6.78	16,349	7.86	16,890	8.12
5.0	14,040	6.75	14,747	7.09	17,181	8.26	17,701	8.51
5.5	14,830	7.13	15,558	7.48	18,054	8.68	18,616	8.95
6.0	15,558	7.48	16,328	7.85	18,949	9.11	19,490	9.37
6.5	16,349	7.86	17,180	8.26	19,864	9.55	20,467	9.84
7.0	17,180	8.26	18,054	8.68	20,654	9.93	21,320	10.25
7.5	18,054	8.68	18,970	9.12	21,819	10.49	22,464	10.80
8.0	18,949	9.11	19,885	9.56	22,922	11.02	23,629	11.36
8.5	19,864	9.55	20,862	10.03	24,128	11.60	24,835	11.94
9.0	20,550	9.88	21,590	10.38	25,314	12.17	26,083	12.54
9.5	21,819	10.49	22,901	11.01	26,562	12.77	27,352	13.15
10.0	22,922	11.02	24,066	11.57	27,810	13.37	28,642	13.77
10.5	24,128	11.60	25,334	12.18	29,307	14.09	30,181	14.51
11.0	25,293	12.16	26,562	12.77	30,784	14.80	31,740	15.26
11.5	26,562	12.77	27,872	13.40	32,302	15.53	33,280	16.00
12.0	27,810	13.37	29,203	14.04	33,800	16.25	34,819	16.74
12.5	29,307	14.09	30,763	14.79	35,630	17.13	36,712	17.65
13.0	30,784	14.80	32,323	15.54	37,440	18.00	38,563	18.54
13.5	32,302	15.53	33,925	16.31	40,227	19.34	41,434	19.92
14.0	33,800	16.25	35,485	17.06	41,184	19.80	42,411	20.39
14.5	35,422	17.03	37,190	17.88	43,202	20.77	44,491	21.39
15.0	37,170	17.87	39,042	18.77	45,427	21.84	46,779	22.49
15.5	39,562	19.02	41,517	19.96	47,923	23.04	49,400	23.75
16.0	41,538	19.97	43,618	20.97	54,080	26.00	55,702	26.78

* Range 0.0 is adjusted annually in January with other ranges assigned to seasonal position classifications.

** Cost of living adjustments for employees in the incentive range are computed on maximum merit rate.

2459C/397-4
12/07/85

TABLE A

METRO PAY PLAN

Salary Range Number		Classification	Beginning Salary	Entry Merit Rate	Maximum Merit Rate	Maximum Incentive Rate
8.5	030	Support Services Supervisor	19,864	20,862	24,128	24,835
	069	Personnel Analyst	9.55	10.03	11.60	11.94
	332	Development Analyst				
	334	Analyst 2				
	362	Graphics Coordinator				
9.0	307	Engineer Planner 2	20,550	21,590	25,314	26,083
	634	Information Systems Analyst	9.88	10.38	12.17	12.54
10.0	039	Senior Accountant	22,922	24,066	27,810	28,642
	076	Research Coordinator	11.02	11.57	13.37	13.77
	335	Analyst 3				
10.5	308	Engineer Planner 3	24,128	25,334	29,307	30,181
	635	Data Processing Oper. Analyst	11.60	12.18	14.09	14.51
11.0	073	Management Analyst	25,293	26,562	30,784	31,740
	636	Data Processing Systems Analyst	12.16	12.77	14.80	15.26
11.5	033	Council Assistant	26,562	27,872	32,302	33,280
	103	Legal Counsel	12.77	13.40	15.53	16.00
	321	Waste Reduction Manager				
	336	Senior Analyst				
12.5	311	Engineer/Analysis Manager	29,307	30,763	35,630	36,712
	070	Personnel Officer	14.09	14.79	17.13	17.65
13.0	082	Director of Criminal Justice Planning	30,784	32,323	37,440	38,563
			14.80	15.54	18.00	18.54
13.5	092	Director of Legislative Services	32,302	33,925	40,227	41,434
	091	Data Processing Manager	15.53	16.31	19.34	19.92
14.0	071	Manager of Accounting	33,800	35,485	41,184	42,411
	090	Technical Manager	16.25	17.06	19.80	20.39
	320	Solid Waste Operations Manager				
14.5	081	Public Affairs Director	35,422	37,190	43,202	44,491
	083	Director of Budget and Administrative Services	17.03	17.88	20.77	21.39
	085	Director of Development Services				
	105	General Counsel				
15.0	079	Administrator - IRC	37,170	39,042	45,427	46,779
	089	Director of Transportation Planning	17.87	18.77	21.84	22.49
	095	Deputy Executive Officer				

2459C/397-10
02/07/85

Table 1

BUDGET & ADMINISTRATIVE SERVICES DIVISION

PERSONAL SERVICES BUDGET

CURRENT 1984-85 & PROPOSED 1985-86

	CURRENT BUDGET 1984-85 [1]				CURRENT BUDGET-PHASE I PROPOSAL (4/1/85)				PROPOSED 1985-86 BUDGET [2]			
	DIVISION		PERSONNEL		DIVISION		PERSONNEL		DIVISION		PERSONNEL	
PERSONAL SERVICES	AMOUNT	FTE	AMOUNT	FTE	AMOUNT	FTE	AMOUNT	FTE	AMOUNT	FTE	AMOUNT	FTE
Deputy Exec. Off.	7,646	.17			7,646	.17			8,121	.17		
Manager, B&AS	39,410	1.00	9,853	.25	39,410	1.00	9,853	.25	40,607	1.00	8,121	.20
Analyst 3	23,954	1.00			23,954	1.00			24,065	1.00		
Personnel Analyst	21,302	1.00	21,302	1.00	15,977		15,977					
Personnel Officer					7,540	1.00	7,540	1.00	31,387	1.00	31,387	1.00
Support Svc. Supr.	7,945	1.00			7,945	1.00			20,259	1.00		
Print Operator	18,126	1.00			18,126	1.00			18,480	1.00		
Lead Word Proc.Opr.	18,403	1.00			18,403	1.00			19,344	1.00		
Word Proc. Oper.	15,714	1.00			15,714	1.00			8,089	.50		
Admin. Asst.	19,915	1.00	11,623	1.00	19,915	1.00	11,623	1.00	20,509	1.00	20,509	1.00
Secretary	6,986	.50	6,986	.50	6,986	.50	6,986	.50	18,633	1.25	14,384	1.00
Maintenance Aide	6,432	.50			6,432	.50			6,510	.50		
Temporary	2,633				2,633							
Overtime	200				200				200			
Merit	112				112				8,640		2,976	
Fringe	56,373		15,096		58,162		16,077		69,702		23,987	
Total	245,151	9.17	64,860	2.75	249,155	9.17	68,056	2.75	294,506	9.42	101,364	3.20

[1] As proposed in mid-year budget adjustments

[2] Includes 2% Pay Plan catch up and 1% increase in fringe costs

Table 2

DATA PROCESSING DIVISION

PERSONAL SERVICES BUDGET

CURRENT 1984-85 & PROPOSED 1984-86

PERSONAL SERVICES	CURRENT BUDGET[1] 1984-85		CURRENT BUDGET (PHASE I (4/1/85)		PROPOSED BUDGET[2] 1985-86	
	AMOUNT	FTE	AMOUNT	FTE	AMOUNT	FTE
Deputy Exec. Officer	7,197	.16	7,197	.16	7,634	.16
Tech. Services Mgr.	12,504	.30	9.378			
Manager - Data Proc.			8,252	1.00	33,000	1.00
Systems Analyst	14,338	.50	14,338	.50		
Operations Analyst	28,740	1.00	28,740	1.00	30,783	1.00
Programmer					10,400	.50
Secretary	3,493	.25	3,493	.25	3,760	.25
Merit	2,752		2,752		3,423	
Fringe	20,675		22,213		27,590	
Total	89,699	2.21	96,363	2.91	116,590	2.91

1 As proposed in mid-year budget adjustments

2 Includes 2% Pay Plan catch up and 1% increase in fringe costs

Figure 1

DEPARTMENT OF FINANCE & ADMINISTRATION
CURRENT STRUCTURE & STAFF
18.8 FTE

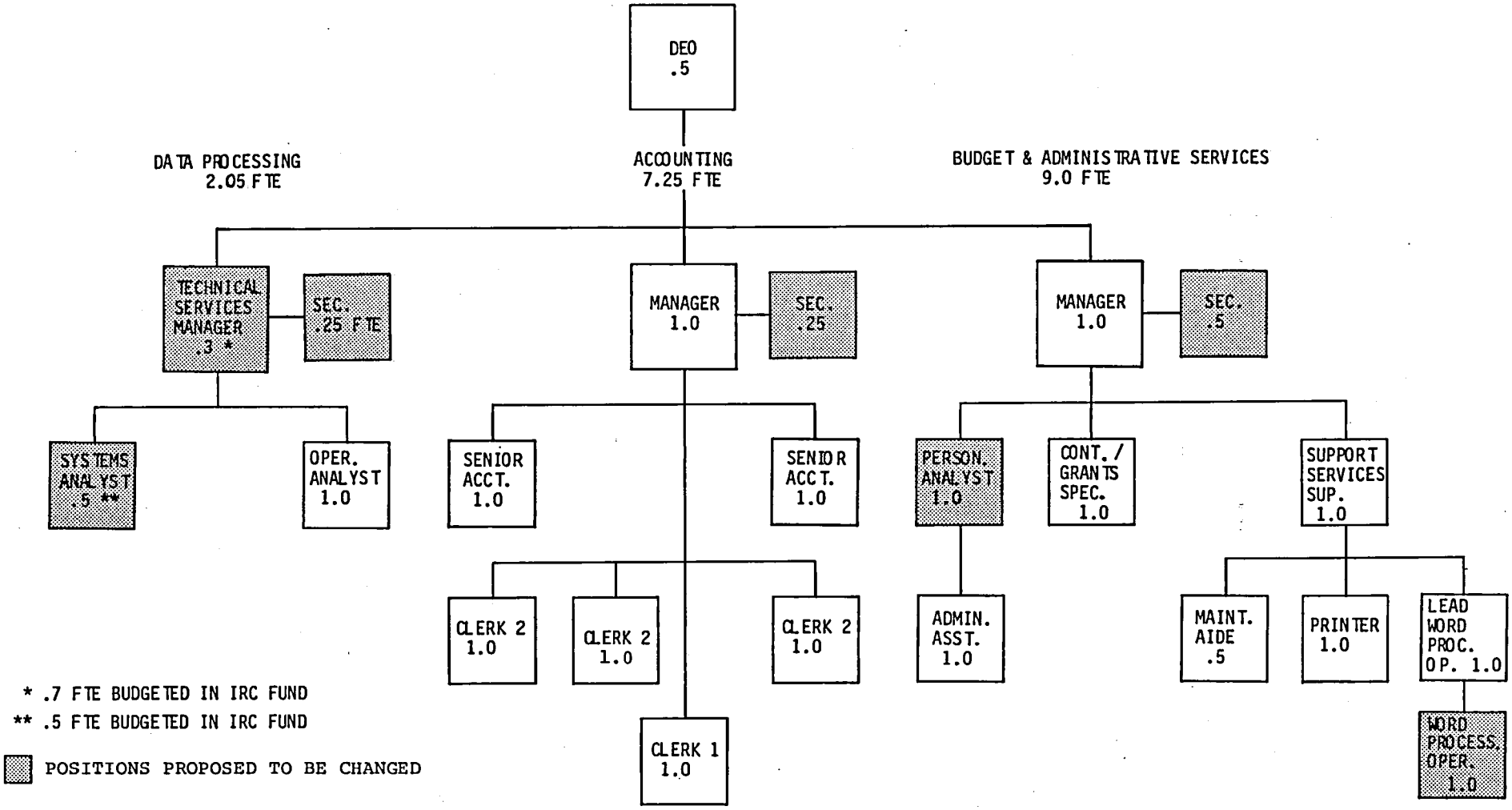

Figure 2

DEPARTMENT OF FINANCE & ADMINISTRATION
PROPOSED STRUCTURE & STAFF
19.5 FTE

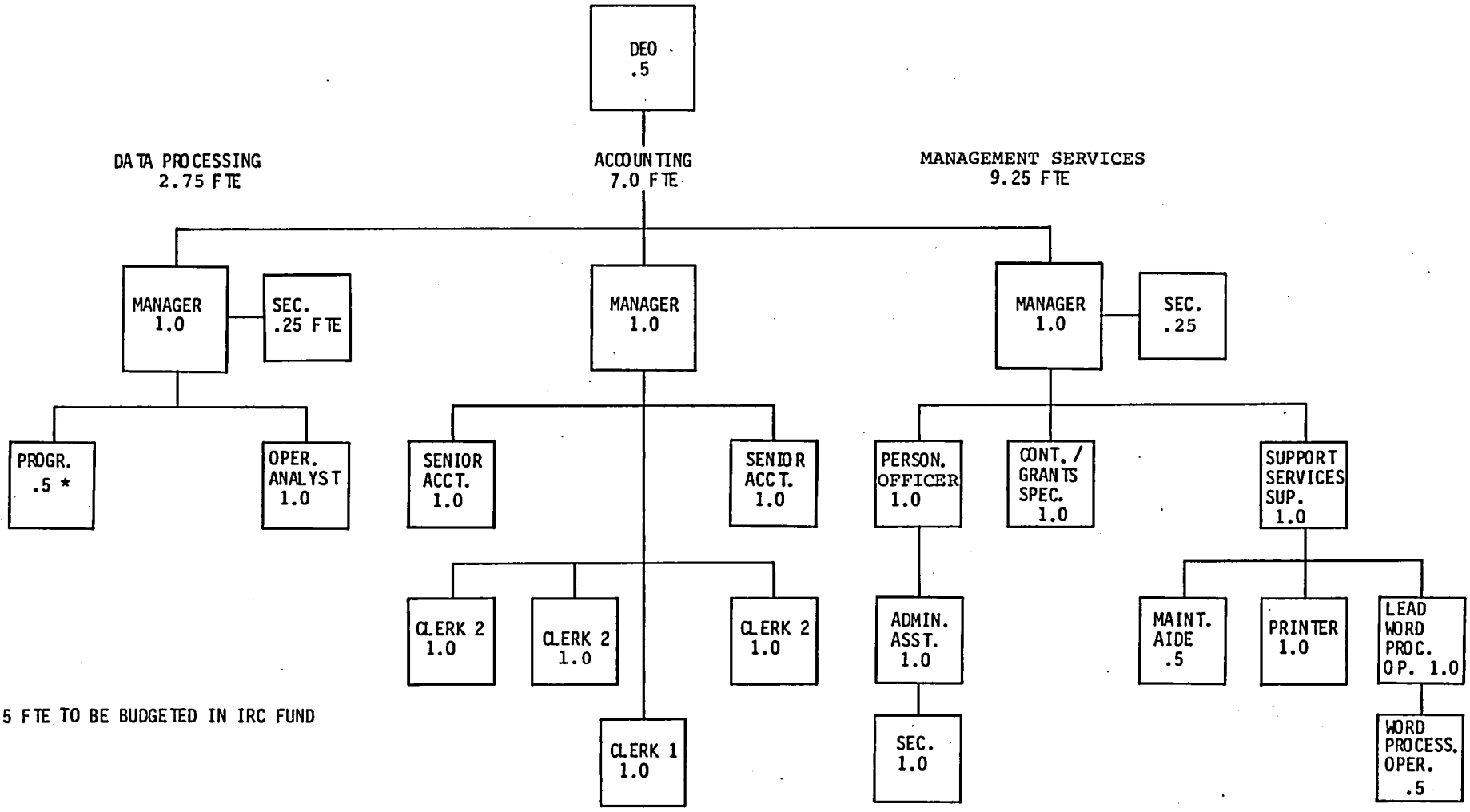

* .5 FTE TO BE BUDGETED IN IRC FUND

Agenda Item No. 6.6

Meeting Date May 23, 1985

Memo

METROPOLITAN SERVICE DISTRICT 527 S.W. HALL ST., PORTLAND, OREGON 97201 503 221-1646
Providing Zoo, Transportation, Solid Waste and other Regional Services

Date: May 16, 1985

To: Metro Council

From: Donald E. Carlson, Deputy Executive Officer

Regarding: Consideration of Resolution No. 85-573 for the purpose of amending Resolution No. 81-116 to create three new classifications

The proposed resolution would create three new classifications and set the salary range for these positions. The proposed classifications are Personnel Officer, Data Processing Manager, and Programmer. These staff changes were presented in the proposed FY 1985-86 Budget. The need and documentation are described in the attached staff report which will be considered by the Council Management Committee on May 16, 1985.

This matter is proposed for action at this time in order to begin recruitment for the new fiscal year as soon as possible. Class specifications will be presented at the meeting or available on request after May 20.

JS/gl
3581C/D3-2

Memo

METROPOLITAN SERVICE DISTRICT 527 S.W. HALL ST., PORTLAND, OREGON 97201-5287 503 221-1646
Providing Zoo, Transportation, Solid Waste and other Regional Services

Date: May 3, 1985

To: Council Management Committee

From: Don Carlson, Deputy Executive Officer

Regarding: Proposed Improvements to the Finance & Administration Department

The attached proposal was presented to the committee at its February 21, 1985 meeting. It was decided then, that the changes recommended for the Finance & Administration department should be considered in the FY 1985-86 budget process. As of this writing, the Budget Review Committee has fully supported the proposal. Pending Council approval of the budget on May 9, we propose to proceed with necessary Council actions so that recruiting may begin immediately.

Three new classifications are proposed which require approval through a resolution amending the Pay & Classification Plans. These materials will be presented at the committee meeting. If recommended by the committee and approved by the Council, recruitment would begin by June 1.

DEC:ktb

Attachment

STAFF REPORT

CONSIDERATION OF A PROPOSAL TO IMPROVE THE SERVICES OF THE DEPARTMENT OF FINANCE AND ADMINISTRATION, PARTICULARLY PERSONNEL AND DATA PROCESSING

Date: February 12, 1985 Presented by: Donald E. Carlson

FACTUAL BACKGROUND AND ANALYSIS

The purpose of this report is to discuss needed changes to strengthen the personnel and data processing capabilities in the Department of Finance and Administration. In 1982, Metro experienced serious financial problems resulting in a reorganization and creation of the Department of Finance and Administration. Three distinct divisions were established within the Department: Accounting, Budget and Administrative Services (including budget, personnel, grants, contract management, word processing, printing and office support functions) and Data Processing. During that time, financial resources were maintained for the Accounting Division (because of the problems with the accounting system) but reductions were made in the personnel area, particularly through the downgrading of the Personnel Manager position from salary range 12.5 to Personnel Assistant at range 8.0. That position was upgraded slightly to Personnel Analyst (8.5) under an agency-wide classification study implemented in July 1984. The Data Processing Division was formally organized in 1982 with a slight addition of resources to fund .3 FTE of the Technical Manager (.7 FTE remainted under Transportation) to act as the Data Processing Division Manager.

Since 1982, good progress has been made in the area of accounting. Regular monthly reports are being provided which greatly assist Department Managers in their fiscal management responsibilities; accounts receivable and payable functions are running smoothly as is the payroll function; investment policies have been adopted by the Council and are implemented by the Accounting Division; and the annual audits for the past two years have been completed in a greatly reduced time and cost over the prior years. In summary, the time and resources applied to the accounting function during the past two years have resulted in a much improved accounting operation. It is time to focus greater effort on the personnel and data processing functions.

Analysis of the Personnel Function.

The responsibility for management of Metro's personnel function is with the Division of Budget and Administrative Services. While the departments take an active role in Personnel matters, many services are provided centrally. These are listed and briefly described in Exhibit A. Four staff members at 2.75 FTE are now directly involved in the listed activities. These are as follows:

1. Division Manager (.25 FTE) works one-quarter time planning and supervising personnel activities. Contact person with Council and Executive Officer on policy matters.

2. Administrative Assistant (1.0 FTE) will work full-time on benefits administration, payroll interface, orientation and selected policy issues once the Support Services Supervisor position is filled.

3. Secretary (.5 FTE) works half-time on recruitment support, assisting applicants and recordkeeping.

4. Personnel Analyst (1.0 FTE) works full-time on the daily administration and processing of all other matters listed in Exhibit A. Serves as Metro's Affirmative Action Officer, participates in collective bargaining, coordinates all recruitments and more.

Problem Statement

Needs of the personnel function have been under review for over a year. Based on recent meetings with the personnel directors from the cities of Beaverton, Gresham and Lake Oswego, and comments from Metro managers and employees, there are five basic problems/needs which must be addressed:

1. The level of expertise and experience of the persons involved in day-to-day personnel matters must be increased. This is important for credibility in dealing with managers and efficiency in tackling the myriad of policy and technical issues that regularly face personnel staff.

2. The personnel function needs to be more visible and focused in the organization.

3. The division of authority and responsibilities between departments and central personnel staff needs to be clarified. The current arrangements are a product of understaffing in central services rather than logical assignment based on needs, expertise, etc.

4. A concentrated technical review of all Personnel Rules, procedures and practices is needed. The Rules are cumber-

some. Procedures and practices may be inconsistent and unclear.

5. Adequate staffing is needed for both technical and clerical work. Adequate technical staff are needed to respond to department and Council needs and to provide those services which should be centralized. Adequate clerical support is needed for accurate and timely recordkeeping, paper processing and applicant assistance.

6. Due to the inadequate level and expertise of current staff plus the worked caused by daily and routine tasks, three major projects will be delayed or not completed this fiscal year. First, limited progress has been made in revising the Personnel Rules. Second, additional work is needed on the Classification Plan including a study of all management level positions for the establishment of a management class series. Third, a special study of Intergovernmental Resource Center (IRC) management needs was promised for consideration with the FY 1985-86 Budget. It has been delayed.

Proposal and Recommendation

1. Establish a Personnel Office by physically arranging staff to give the function identity.

2. Upgrade the Personnel Analyst to a Personnel Officer.

3. Assign a full-time Administative Assistant to Personnel under the Personnel Officer. The other half-time duties of this position would be transferred to the Support Services Supervisor, a new position.

4. Assign the equivalent of a full-time Secretary to Personnel.

As displayed in the chart below, there are discrepancies between the budget, actual use and needs.

	Budget (FTE)	Actual Use	Actual Need
Budget & Admin. Services	.5	.8	1.25
Data Processing	.25	.2	.25
Accounting	.25	0	0
Total	1.0	1.0	1.5

To meet the other clerical needs of the division and those of data processing, it is proposed that one Word Processing Operator be utilized as a Secretary on a half-time basis. This could be accomplished with existing staff.

5. Change the division name from Budget and Administrative Services to Management Services. The division title over emphasizes the budget function and contributes to the confusion over where the responsibility for personnel lies.

6. Immediately focus on a work program with the following priorities:

   a. Review and revise all Personnel Rules, procedures and practices.

   b. Work with departments to clarify central and department responsibilities.

   c. Automate or systematize personnel recordkeeping.

   d. Develop and recommend an organizational training program

The existing and proposed organizational structure and staffing for the personnel function is displayed in Figures 1 and 2 attached.

Timing

The problems and needs identified in this report are immediate and ongoing. It would be beneficial to make these changes as soon as possible. We recommend that implementation be accomplished in two step. First, the position of Personnel Officer be established by the Council during the current fiscal year (effective April 1, 1985) and the remaining changes take place during the 1985-86 fiscal year (effective July 1, 1985). The first step to making improvements to the Personnel function should be the recruitment and hiring of a Personnel Officer. Once that person is on board, a more specific improvement program can be developed and implemented. Table 1 attached shows the fiscal implications for improvements in the Personal Services category of the Budget and Administration Services Division budget.

If the Management Committee agrees with this recommendation, the necessary ordinance for establishing the Personnel Officer position and Pay Plan change will be forwarded to the Council for consideration.

ANALYSIS OF THE DATA PROCESSING FUNCTION

The Date Processing Division was created in 1982-83 on a recommendation from the Council's Financial Task Force. It was formed during a period of severe budget constraints to assist in the development and utilization of existing computer hardware and software. The history of Metro's use of computers is as follows:

Prior to 1979

The Transportation Planning Department was the only unit that was utilizing a computer. At that time CRAG used a large mainframe computer operated by Multnomah County. All of the Data Processing staff worked in the Transportation Planning Department.

1979-1982

During this period Metro purchased its first computer -- a DEC PDP 11-34 (mini-computer). It initially was used by the Transportation Department. A financial software package from Manus was added in 1981. Responsibility for implementing the financial package was given to Accounting. Computer operation was handled by the Transportation Department - essentially by default as this was the only internal source of computer skills. Unfortunately, there was no coordination or linkage between the computer operation group and the Accounting Department implementing the financial package which became the major application. The computer was maintained and kept operational but there were many problems implementing the financial package - mostly due to lack of internal understanding of how it worked. This situation was a major factor which led to Metro's financial problems in 1982.

1982-1983

The Data Processing Division was established. Two staff members from the Transportation Department were moved to the division and the Technical Service Manager was made part-time manager of the division (.3 FTE). Most of the existing computer problems were overcome and the finance package was gradually implemented. However, the machine operation was slow due to insuffient computer resources. At this stage, two computers were in use - one in-house (PDD 11-34) used primarily for finance and secondarily for transportation planning and Multnomah County's large mainframe (for transportation planning and data services).

1984-85

During the current fiscal year a new computer has been added to replace the use of Multnomah County's large mainframe. The IRC purchased a Pixel 100/AD and a software package for transportation modeling. Additional disks have been purchased for the PDP 11-34 and a disk management software was added to improve the PDP 11-34 operation. Implementation of the finance package has been continually upgraded during this period. At this state, the PDP 11-34 operates at a reasonable level for accounting purposes. Any other use or significant improvement to the finance package will result in the need for more computing power.

The new Pixel 11/AD has received so much use that it is now at capacity and demand continues to grow. There is need for additional computing power for the transportation planning and data services functions.

Metro's current word processing system functions well but is an old, centralized system which inhibits distributed word processing and mailing list management. There are other applications for computer use in the agency including records management, budgeting, and graphics. Recent development of micro computers has led to understandable requests for the application of these systems. This trend will continue.

Problem

Metro's use of computers for accounting and transportation planning has been a success. Unfortunately, we have no comprehensive data processing plan to guide us in obtaining and applying new computer technology. Such a plan can lead to productivity improvements as has occurred in other government agencies and the private sector. The increasing demands for programming assistance and the increased load in computer operations assistance have led to a lack of staff resources to complete a data processing plan. Programming help to Metro departments has also suffered.

Recommendation

1. Staff Changes: Establish a full-time position of Data Processing Manager to plan and organize the activities of the division. Replace the System Analyst position with an entry level programmer. The Data Processing staff would then include a Data Processing Manager, Operations Analyst, Programmer and part-time Secretary.

2. Data Processing Plan: There is a need to comprehensively and systematically analyze existing information processing capabilities and needs and prepare a strategy for cost effective computer improvements.

3. Establish a micro computer policy that allows for purchase of micro computers. This policy is needed regardless of the availability of larger computers and should not wait on the existence of a data processing plan. Resource budgeting for personal computers should be based in user departments. Executive Order No. 23, the microcomputer acquisition policy, is attached as Exhibit B.

The existing and proposed organizational structure and staffing for the Data Processing function is displayed in Figures 1 and 2 attached.

Timing

We recommend that implementation be accomplished in two steps. First, the position of full-time Data Processing Manager be established by the Council during the current fiscal year (effective April 1, 1985) and the remaining changes take place during FY 1985-86 (effective July 1, 1985). Obtaining the services of a

full-time manager now will enable us to initiate work on the data processing plan. This will include preparing an RFP and selection process to hire a consultant to assist in the development of the data processing plan. With an early start, any budget implications for new system acquisitions will be addressed by July 1986. Table 2 shows the fiscal implications for improvements in the personal services category of the data processing budget. If the Management Committee agrees with this recommendation, the necessary ordinance for establishing the Data Processing Manager position and Pay Plan changes will be forwarded to the Council for consideration.

DEC/amn
2940C/405-3
02/14/85

EXHIBIT A

CENTRAL PERSONNEL SERVICES

1. Affirmative Action
   - Administer and update the program.
   - Provide regular status reports.
   - Conduct outreach efforts.

2. Personnel Rules
   - Administer and update.

3. Recruitment and Selection
   - Plan and oversee process.
   - Respond to applicant inquiries.
   - Provide employee orientation.

4. Compensation
   - Administer and update the Pay Plan.
   - Process and record all pay changes.

5. Classification
   - Administer and update the Classification Plan.
   - Conduct reclassification study.

6. Safety
   - Ensure compliance with laws.
   - Administer the Workers' Compensation program.
   - Implement first aid program and training.

7. Labor Relations and Negotiations
   - Participate in collective bargaining.
   - Maintain liaison with union representatives.

8. Benefits
   - Administer all benefits programs from enrollment to termination, including medical/dental insurance, disability program, retirement, life insurance, Social Security and unemployment compensation.

9. Counseling
   - Provide information and assistance to supervisors on personnel matters.
   - Provide counseling and advice to all employees on personal problems.

10. Processing and Recordkeeping
    - Review and process all paperwork regarding employment from appointment to separation.
    - Maintain files and records of all information regarding an employee's employment.
    - Generate various reports for internal and external use based on records.

JS/gl/2940C/405-2
02/14/85

EXHIBIT B-1

EXECUTIVE ORDER: NO. 23

EFFECTIVE DATE: MARCH 14, 1985

SUBJECT: MICROCOMPUTER ACQUISITION

This document describes the policy for acquiring microcomputers and related software to achieve the following goals: to encourage improved work quality and productivity by the cost-effective application of microcomputers; to allow end users the opportunity to acquire hardware and software; to enhance the exchange of information and experience concerning the purchase and use of microcomputer hardware and software.

I. Acquisition of Microcomputer Hardware and Software

A. Prior to the acquisition of microcomputer hardware or software users shall and identify:

1. tasks suitable for computerization;
2. appropriate hardware and software systems; and
3. purchase and maintenance providers, with the aid, if requested, of the data processing division.

B. In considering all purchases users are encouraged but not required to:

1. consider hardware and software being used successfully at Metro;
2. have data processing evaluate hardware and software not currently in use at Metro; and
3. for software, select end user packages to avoid programming.

C. The following procedures shall be used for all purchases of software costing more than $500 and of all hardware:

1. The user shall prepare and submit to the data processing division a request considering the following requirements:

   a. is the purchase proposed adequate to service the needs identified; and
   b. are the benefits derived commensurate with the cost of the purchase.

2. The data processing division shall determine whether the purchase meets the requirements under 1 above and shall also determine whether the purchase is compatible with and has a positive effect on Metro's existing data processing and information systems. When it is appropriate to use and maintain data exclusively on the proposed purchase, the compatibility requirement may be waived by the Deputy Executive Officer. The

data processing division shall make a recommendation on the purchase to the Director of Finance & Administration.

3. The Deputy Executive Officer must approve all purchases.

II. Information Exchange

A. The data processing division will maintain for use by Metro employees a list of microcomputer hardware and software currently in use at Metro.

B. Users will inform the data processing division of all acquisitions of microcomputer hardware and software.

C. The data processing division shall maintain a list of recommended hardware and software for common office applications.

III. User Responsibilities

Users shall have the following responsibilities:

A. Users are responsible for administering the purchase and maintenance of the systems they use.

B. Users are responsible for the programs and applications they develop and for all programming problems, errors and maintenance thereof.

C. Users shall obey the letter and spirit of the laws of copyright and trademark.

D. Users shall not use microcomputers for unauthorized access or modification of data on other machines.

E. Users shall clearly label as derivative any report which is based on data copied from the central repository for that data.

F. Users shall ensure the security of their hardware, software and data.

EXECUTIVE OFFICER

RG/ESB/srs
3104C/410-2
03/14/85

NOTE: This Executive Order replaces the draft microcomputer acquisition policy originally included as Exhibit B to this staff report.

Table 1

BUDGET & ADMINISTRATIVE SERVICES DIVISION

PERSONAL SERVICES BUDGET

CURRENT 1984-85 & PROPOSED 1985-86

PERSONAL SERVICES	CURRENT BUDGET 1984-85 [1]				CURRENT BUDGET-PHASE I PROPOSAL (4/1/85)				PROPOSED 1985-86 BUDGET [2]			
	DIVISION		PERSONNEL		DIVISION		PERSONNEL		DIVISION		PERSONNEL	
	AMOUNT	FTE	AMOUNT	FTE	AMOUNT	FTE	AMOUNT	FTE	AMOUNT	FTE	AMOUNT	FTE
Deputy Exec. Off.	7,646	.17			7,646	.17			8,121	.17		
Manager, B&AS	39,410	1.00	9,853	.25	39,410	1.00	9,853	.25	40,607	1.00	8,121	.20
Analyst 3	23,954	1.00			23,954	1.00			24,065	1.00		
Personnel Analyst	21,302	1.00	21,302	1.00	15,977		15,977					
Personnel Officer					7,540	1.00	7,540	1.00	31,387	1.00	31,387	1.00
Support Svc. Supr.	7,945	1.00			7,945	1.00			20,259	1.00		
Print Operator	18,126	1.00			18,126	1.00			18,480	1.00		
Lead Word Proc.Opr.	18,403	1.00			18,403	1.00			19,344	1.00		
Word Proc. Oper.	15,714	1.00			15,714	1.00			8,089	.50		
Admin. Asst.	19,915	1.00	11,623	1.00	19,915	1.00	11,623	1.00	20,509	1.00	20,509	1.00
Secretary	6,986	.50	6,986	.50	6,986	.50	6,986	.50	18,633	1.25	14,384	1.00
Maintenance Aide	6,432	.50			6,432	.50			6,510	.50		
Temporary	2,633				2,633							
Overtime	200				200				200			
Merit	112				112				8,640		2,976	
Fringe	56,373		15,096		58,162		16,077		69,702		23,987	
Total	245,151	9.17	64,860	2.75	249,155	9.17	68,056	2.75	294,506	9.42	101,364	3.20

[1] As proposed in mid-year budget adjustments

[2] Includes 2% Pay Plan catch up and 1% increase in fringe costs

Table 2

DATA PROCESSING DIVISION

PERSONAL SERVICES BUDGET

CURRENT 1984-85 & PROPOSED 1984-86

PERSONAL SERVICES	CURRENT BUDGET [1] 1984-85		CURRENT BUDGET (PHASE I (4/1/85)		PROPOSED BUDGET [2] 1985-86	
	AMOUNT	FTE	AMOUNT	FTE	AMOUNT	FTE
Deputy Exec. Officer	7,197	.16	7,197	.16	7,634	.16
Tech. Services Mgr.	12,504	.30	9.378			
Manager - Data Proc.			8,252	1.00	33,000	1.00
Systems Analyst	14,338	.50	14,338	.50		
Operations Analyst	28,740	1.00	28,740	1.00	30,783	1.00
Programmer					10,400	.50
Secretary	3,493	.25	3,493	.25	3,760	.25
Merit	2,752		2,752		3,423	
Fringe	20,675		22,213		27,590	
Total	89,699	2.21	96,363	2.91	116,590	2.91

[1] As proposed in mid-year budget adjustments

[2] Includes 2% Pay Plan catch up and 1% increase in fringe costs

Figure 1

DEPARTMENT OF FINANCE & ADMINISTRATION
CURRENT STRUCTURE & STAFF
18.8 FTE

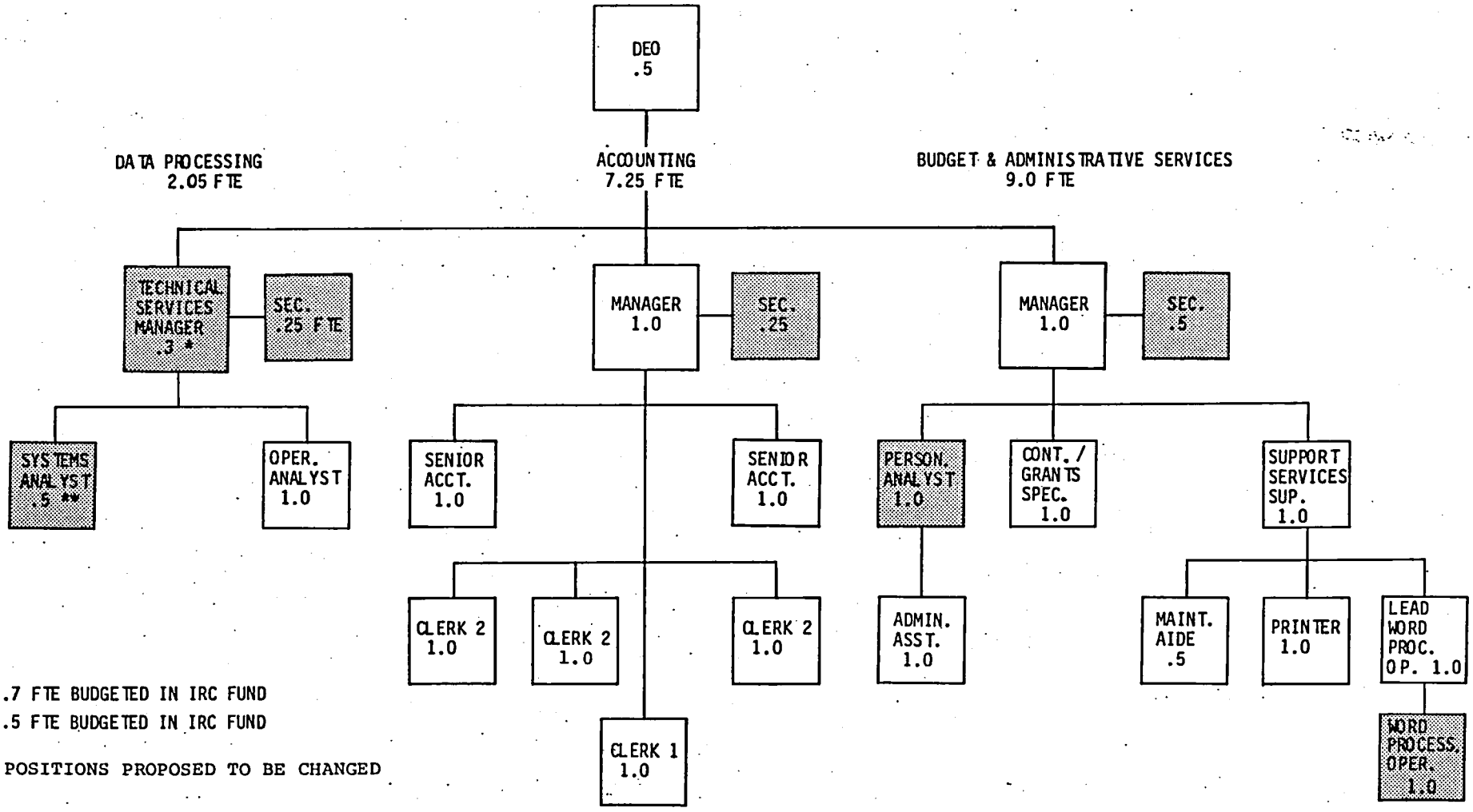

Figure 2

DEPARTMENT OF FINANCE & ADMINISTRATION
PROPOSED STRUCTURE & STAFF
19.5 FTE

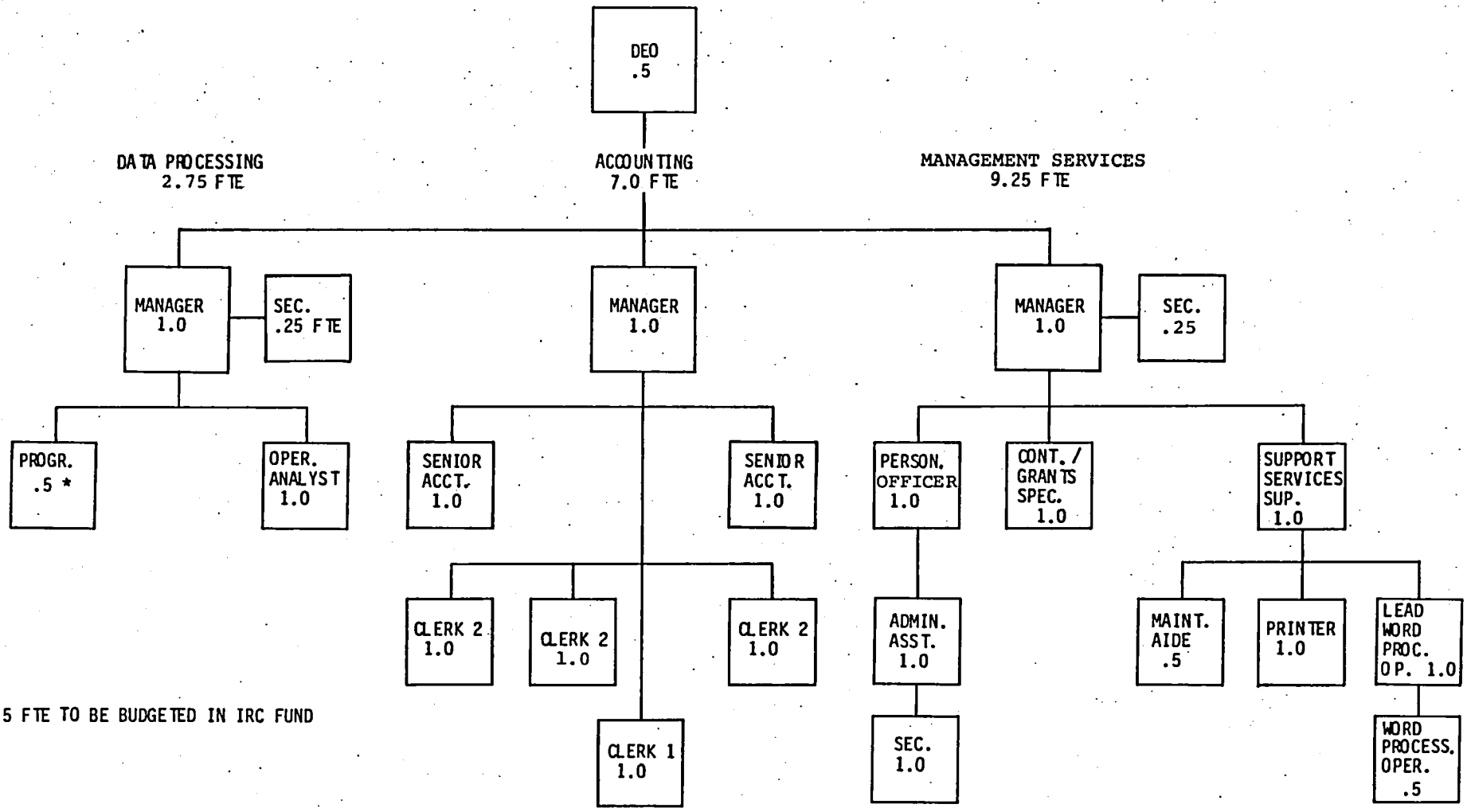

* .5 FTE TO BE BUDGETED IN IRC FUND