MARCH
2005

Healthy Streams Plan



DRAFT

Clean Water Services

Clean Water Services is the surface water management and sanitary sewer system utility for urban Washington County. Clean Water Services works with its 12 member cities to operate and maintain wastewater and storm water systems, and manage surface waters to improve water quality, aquatic habitat, and manage flood risk in the Tualatin River and its tributaries. The District's vision is to enhance the environment and quality of life in the Tualatin River Watershed through visionary and collaborative management of water resources in partnership with others.

Clean Water Services Mission

Provide cost-effective services and environmentally sensitive management of water resources for the Tualatin River Watershed.

Clean Water Services

2550 SW Hillsboro Hwy
Hillsboro, OR 97123
503.681.3600
www.cleanwaterservices.org

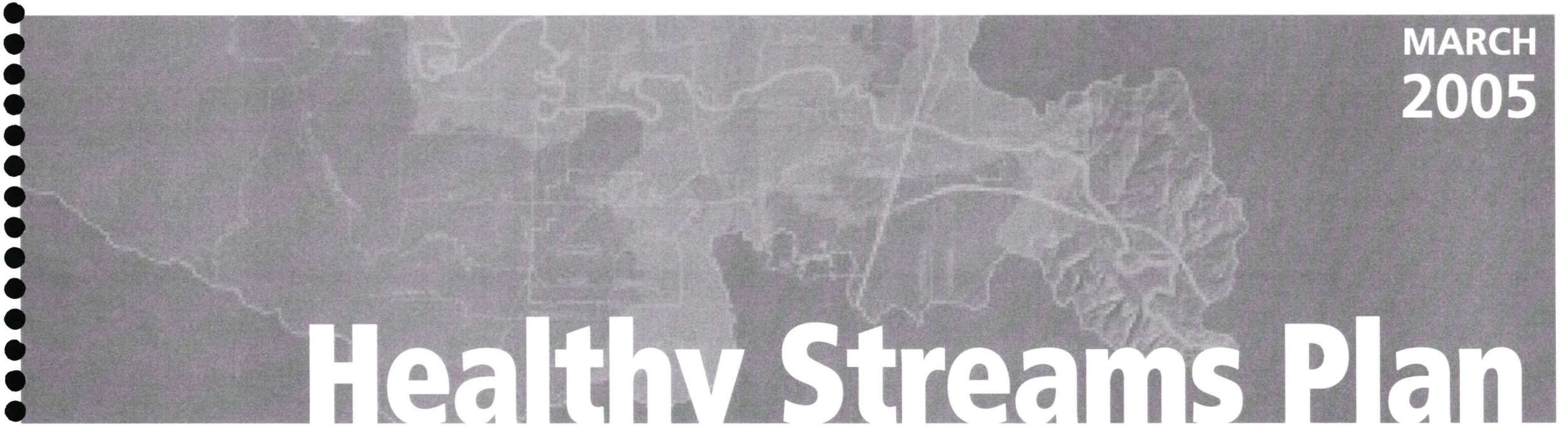

MARCH
2005

Healthy Streams Plan

Principal Authors

Kendra Smith
Water Resources Program Manager,
Clean Water Services

Jill Ory
Water Resources Analyst
Clean Water Services

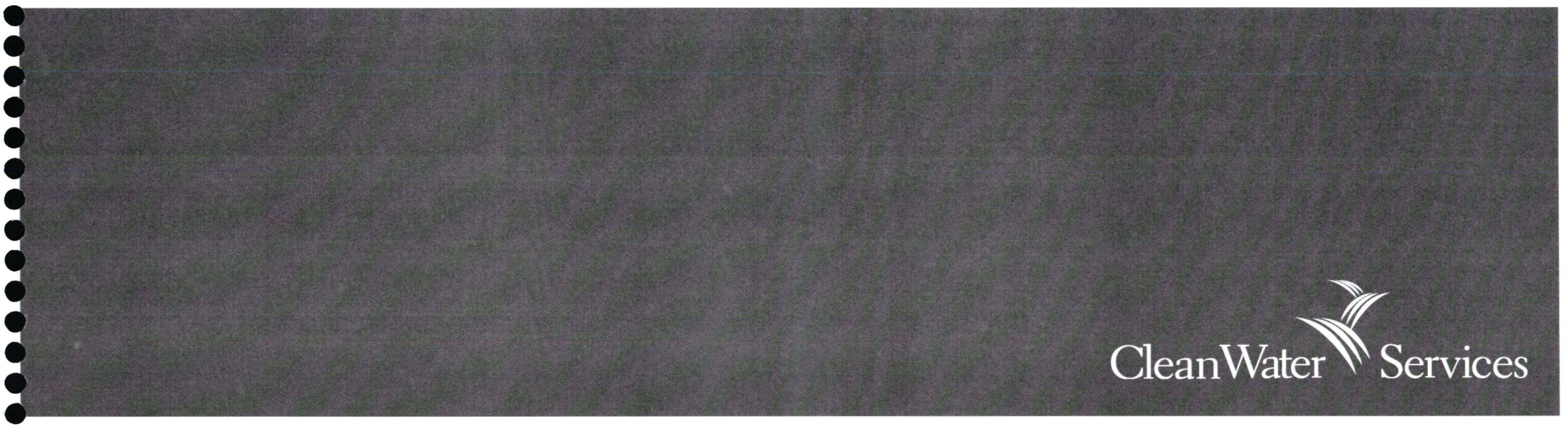

Cooperating and/or Contributing Partners

City of Banks

City of Beaverton

City of Cornelius

City of Durham

City of Forest Grove

City of Hillsboro

City of King City

City of North Plains

City of Sherwood

City of Tigard

City of Tualatin

Federal Emergency Management Agency (FEMA)

Metro

Tualatin Hills Parks and Recreation District

Washington County

Contents

ACKNOWLEDGMENTS . . . . . **x**

INTRODUCTION . . . . . **vii**

Part I: HEALTHY STREAMS ACTION PLAN **1**

Sustaining Healthy Streams x

Scope of the Healthy Streams Plan x

How Clean Water Services Already Helps Streams x

Looking beyond Regulatory Requirements x

Planning Context for the Healthy Streams Plan x

How this Document Is Organized x

Part II: DATA AND ANALYSIS . . . . . **x**

Introduction

1. Social Data and Analysis . . . . . **x**

Population Trends and Demographics x

Community Values x

Public Habits and Behaviors x

Awareness of Surface Water Issues x

2. Economic Data and Analysis . . . . . **x**

Watershed Improvement Costs x

Economic Valuation of Watershed Improvements x

Finance Options x

3. Environmental Data and Analysis . . . . . **x**

Study Area x

Methods x

Geologic Origins of the Watershed x

Geology and Soil x

Land Use and Cover x

Watershed Impervious Area x

Hydrology . . . x
Geomorphology . . . x
Riparian Vegetation . . . x
Water Quality . . . x
Fish and Wildlife . . . x
Qualitative Assessment of Stream Quality . . . x
Culverts and Bridges . . . x
Stormwater . . . x
Miscellaneous Pollutant Source Data and Analysis . . . x
Health Targets for Properly Functioning Stream Conditions . . . x
Conclusions of the Environmental Analysis . . . x

4. Projects, Programs, and Priorities . . . x

Ecological Recovery Ranges . . . x
Watershed Prioritization . . . x
Identification and Prioritization of Project Opportunities . . . x
Project Implementation Feasibility and Prioritization . . . x

Part III: LITERATURE AND APPENDICES . . . x

Literature Cited . . . x

Appendices . . . x

A Evolution of the Surface Water Management Program . . . x
Summary of Clean Water Act and Endangered Species Act . . . x
303(d) Listed Streams in the Tualatin Basin . . . x

B Community Tree Planting Challenge Details . . . x
Stormwater Outfall Retrofit Details . . . x
Culvert Upgrade Details . . . x

C Public Values Survey – Davis, Hibbitts and McCaig . . . x
Public Behaviors Survey – Riley Research . . . x

D ECONorthwest Analysis of Ecosystem Benefits . . . x

E Hydrology/Hydraulics Modeling Methods and Results . . . x
Rapid Stream Assessment Method and Results . . . x
Location and Description of Flow Gages . . . x

NOTE THAT THESE ARE ELECTRONIC AND WHERE TO FIND THEM.

Plant Community Types and Plant Lists x
Historic Data on Aquatic Habitat and Fish x
ODFW Fish Surveys 1995 and 2000 x
Macroinvertebrate Surveys 2002 x

F Culvert Table and Map x
Outfall Table and Map x

SOMEONE SHOULD CHECK THESE TITLES AGAINST THE ACTUAL FIGURES, TABLES, AND MAPS TO MAKE SURE THEY'RE CONSISTENT

Figures

1 Integrated Water Resources Management

II-1 Population and Demographics

II-2 Public Values Regarding Water Resources

II-3 Priority of Public Values

II-4 Public Awareness Regarding Water Quality Impacts

II-5 Perceived Priority of Behaviors Impacting Water Quality

II-6 Historic Surface Water Management Fund Expenditures – Capital Projects

II-7 Capital Project Types – FY 2000-2004

II-8 Public Preferences for Funding

II-9 Public Willingness to Pay for Water Resource Improvements

II-10 The Bretz Floods

II-11 Extrapolated Impervious Cover Acreage by Type for Areas inside the Urban Growth Boundary

II-12 Puget Sound Imperviousness Plotted against Index of Biotic Integrity

II-13 EIA Plotted against Multi-metric Score of Macroinvertebrate Communities in High-gradient Streams

II-14 EIA Plotted against Macroinvertebrate Community Condition Score in Low-gradient Streams

II-15 The Hydrologic Cycle and the Influence of Changing Land Cover

II-16 Distribution of Rainfall by Storm Size

II-17 Flow Augmentation in the Tualatin River

II-18 Peak Flows by River Mile

II-19 Typical Channel Morphology and Disturbance Regime of Pacific Northwest Coastal Ecoregion

II-20 Plot of Riparian Widths against Overall Stream Health

II-21 Monthly Water Quality Index Trends for Major Local Streams

II-22 Prioritization and Project Selection Process

II-23 Watershed stream-health continuum

II-24 Management Objectives Relative to Watershed Condition

Tables

I-1 Policy and Program Refinements

I-2 Stream Preservation and Enhancement

I-3 Potential Flow Restoration Projects

I-4 Community Tree Planting Challenge – Community Stream Enhancement

I-5 Stormwater Outfall Retrofit Projects

I-6 Culvert Upgrade Projects

I-7 Overall Plan Costs

II-1 Frequency of Water Quality Impacting Behaviors

II-2 Historic Surface Water Management Fund Expenditures – Capital Projects

II-3 SWM Capital Project Types – FY 2000-2004

II-4 Average Costs of Capital Improvement Elements

II-5 Valuation of Ecosystem Functions

II-6 Anticipated Range of Benefits for Stream Enhancement Activities

II-7 Surface Water Management Fees of Other Jurisdictions within Oregon

II-8 Surface Water Management Funds Available by Jurisdiction as of FY 04

II-9 Percentage of Impervious Cover Types in Bronson Creek Watershed

II-10 Average Monthly Temperatures and Precipitation for the Tualatin Basin

II-11 History of Base Flow Augmentation to Tualatin River

II-12 Sample of Surface Water Flows of Tualatin and Major Tributaries

II-13 Major Reach Types of River and Streams

II-14 Relative Importance of Factors to Water Quality

II-15 Fish and Wildlife Species in the Metro Region

II-16 Fish Species Observed and IBI Scores by Stream Reach

II-17 Macroinvertebrate Mean Rank for Low-gradient Streams and Multi-metric Scores for High-gradient Streams

II-18 Sample of Qualitative Scoring Results

II-19 Stream Health Targets by Reach Type

II-20 Management Tools Used in RESTORE Model

II-21 Public Values/Goals and Corresponding Objectives

II-22 Total Miles of RESTORE-determined Enhancement Activity

Maps

1 Tualatin River Basin

I-1 Stream Preservation and Enhancement Project Locations

I-2 Flow Restoration Project Locations

I-3 Community Tree Planting Challenge Potential Locations

I-4 Stormwater Outfall Retrofit Project Locations

I-5 Culvert Upgrade Locations

II-1 Green Infrastructure in the Tualatin Basin

II-2 Effective Impervious Area Coverage

II-3 Flow-deficient Watersheds as of 2000

II-4 Water Rights and Allocations

II-5 Floodplain Modeling and Mapping

II-6 Reach Types and Stream Classifications

II-7 Historic Vegetation Cover

II-8 Tree Canopy Cover

II-9 Native/Non-native Species Presence in the Riparian Corridor

II-10 Water Quality Monitoring Sites

II-11 Stream Bed Material

II-12 Large Wood in Streams

II-13 Estimated Spawning and Rearing Habitat

II-14 Abundance of Fish at Sampling Locations

II-15 Abundance of Macroinvertebrates at Sampling Locations

II-16 Metro Upland Goal 5 Map

II-17 Overall Qualitative Ranking of Streams

II-18 Priority Watersheds for Aquatic Species

II-19 Priorities for Stormwater Management

II-20 Priority Watersheds for Flow Restoration

II-21 Total Priority Results of RESTORE

II-22 Locations of Flow Restoration, Revegetation, Land Preservation and Geomorphic Enhancement Priorities

Acknowledgments

Healthy Streams Plan Partners

Clean Water Services developed the Healthy Streams Plan in partnership with the local land use jurisdictions of Washington County, special service districts, and the federal government as previously listed under Cooperating and/or Contributing Partners. Local expertise and feedback was greatly appreciated throughout the planning process.

Healthy Streams Plan Advisory Committee

An Advisory Committee of local watershed stakeholders guided the planning. The Advisory Committee met regularly throughout the development of the Plan.

Dick Schouten, *Washington County (Committee Chair)*

Hal Bergsma, *City of Beaverton*

Scott Bernards, *Tualatin Hills Park and Recreation District*

Rob Burkhart, *Oregon Department of Environmental Quality*

Bill Gaffi, *Clean Water Services*

Tom Gamble, *West County City Representative*

Ron Garst, *Environmental Representative*

Laura Hill, *U.S. Fish and Wildlife Service*

Marissa Houlberg, *Citizen Representative*

Terry Keyes, *South County City Representative*

Jim Lange, *Business Representative*

Dan Logan, *Rural Representative*

Greg Miller, *Transportation Representative*

Ernie Platt, *Homebuilder Representative*

Pat Ribellia, *City of Hillsboro*

Stephanie Shanley, *Business Representative*

Jim Turner, *NOAA-Fisheries*

Lori Hennings, *Metro*

Amin Wahab, *City of Portland*

Many other participants provided considerable help, including the three regional project committees for Watersheds 2000, the task forces that assisted with regulatory updates to design and construction standards, city and county staff, and consultants who provided technical information and analysis throughout the four-year project. Clean Water Services greatly appreciates the time, effort, and skill these people provided.

Watersheds 2000 South County Project Committee

Corinne Conway, *Resident*

Dale Deharpport, *Home Builders Association*

Christie Galen, *Resident*

Marissa Houlberg, *Resident*

Terry Keyes, *City of Sherwood*

Mike McKillip, *City of Tualatin*

Len Schelsky, *Westlake Consultants*

Watersheds 2000 Central County Project Committee

Melissa Gall, *Washington County*

Scott Hamilton, *Resident*

Steve Huffman, *Soil and Water Conservation District*

Jim Labbe, *Audubon Society of Portland*

Larry Landauer, *Agriculture*

Lauri Mullen, *Tualatin Riverkeepers*

Ernie Platt, *Home Builders Association*

Vergie Ries, *City of Forest Grove*

David Whitaker, *CH2M Hill*

Watersheds 2000 East County Project Committee

Margaret Armstrong, *Merlo Station High School*

Greg Berry, *City of Tigard*

Mark Boguslawski, *City of Beaverton*

Bob Bothman, *Resident*

Jay Hamlin, *Resident*

Laura Hill, *Resident*

John Jensen, *Resident*

Rick Raetz, *Washington County*

Julie Reilly, *Tualatin Hills Parks and Recreation District*

Jennifer Snyder, *WRG Design*

Forrest Soth, *Beaverton City Council*

Edward Trompke, *Westside Economic Alliance*

Jennifer Wells, *City of Hillsboro*

Vegetated Corridor Task Force

Heidi Berg, *Clean Water Services*

Dave Cady, *Centex Homes*

Ron Carley, *Audubon Society of Portland*

Nora Curtis, *Clean Water Services*

Francis Erickson, *Tektronix*

Barbara Fryer, *Beaverton*

John Rieman, *WRG Design*

Kendra Smith, *Clean Water Services*

Jennifer Snyder, *David Evans and Associates*

Scott Talbot, *Hillsboro*

Ross Van Loo, *Washington County*

Effective Impervious Area Task Force

Greg Berry, *Tigard*

Bruce Bieri, *Hillsboro*

Dana Burns, *Washington County*

Joe Curran, *Specht*

Nora Curtis, *Clean Water Services*

Bill Derry, *CH2M Hill*

Melissa Gall, *Washington County*

Sue Gries, *Tualatin Watershed Council*

Jeff Grunwald, *Tualatin Valley Fire and Rescue*

Charlie Marble, *Forest Grove*

Mike McKillip, *Tualatin*

Brian Rager, *Tigard*

Brad Roast, *Beaverton*

Dawn Uchiyama, *Clean Water Services*

Kendra Smith, *Clean Water Services*

Gille Willbanks, *Citizen*

Hydrology/Hydraulics – Stormwater Task Force

Jeffrey Blank, *HDR, Inc.*

Kevin Coulton, *HDR, Inc.*

Jim Duggan, *Beaverton*

Doug Gates, *Clean Water Services*

Cedomire Jesec, *WRG Design*

Terry Keyes, *Sherwood*

Roy Koch, *Portland State University*

Dennis O'Connor, *Habitat Concepts*

Jill Ory, *Clean Water Services*

Ernie Platt, *Home Builders Association*

Phil Pommier, *Pacific Water Resources*

Rick Raetz, *Washington County*

Kathy Sugnet, *Pacific Water Resources*

Ken Vigil, *Vigil Agrimis*

Clean Water Services Staff

Bill Gaffi, *General Manager*

Watershed Management Division: Craig Dye, Tom Vanderplaat, Kendra Smith, Jill Ory, Jan Miller, Bernie Bonn, Bruce Cordon, Peter Guillozet, Dave Nutt, Dawn Uchiyama

Conveyance Systems Department: Robert Cruz, Nora Curtis, Heidi Berg, Doug Gates

Public and Employee Services Division: Linda Kelly, Mark Jockers, Sheri Wantland

Project Consultants

Ecological Consultants

Fishman Environmental Services: Paul Fishman, Dan Stark, Kathy Mai, Steve Novotony, Kim Gould, Rafael Guiterrez

Pacific Habitat Services: John Van Staveren, Patricia Farrell, Sean Eisner

Montgomery Watson Harza: Mary Louis O'Keefe, Betsy Torrell, Craig Cooper, Eileen McLanahan

ABR, Inc: Michael Cole

Water Resource Engineering and Survey Consultants

Pacific Water Resources: Roger Sutherland, Seth Jelen, Kathy Sugnet, Phil Pommier, Steve Blanton, Ken Elbert

Phil Williams and Associates: Kevin Coulton

Tetra Tech: Jim Harper, Brad Moore

Davis Consulting Group: Doug Davis, Mike Meuchler, Frank Campbell-Gilles

GIS and Web Consultants

Metro

Ecotrust: Mike Merten

Public Affairs Consultants

Jeanne Lawson and Associates: Vaughn Brown, Kristen Kibler

Davis, Hibbitts & McCaig: Tim Hibbitts, Adam Davis, Tripp Somerville, Su Midghall

Riley Research Associates: Michael Riley

Economic Consultants

ECONorthwest: Ed MacMullan, Ed Whitelaw

Decision-Making Model Consultants

Oregon State University: John Bolte, Ariana Henning

Plan Editing, Layout, and Design

Counterpoint Consulting: Nancy Jerrick

Bryan Potter Design: Bryan Potter, Eldon Potter

Abbreviations

CWA	Clean Water Act
DEQ	Department of Environmental Quality – Oregon
District	Clean Water Services
EPA	Environmental Protection Agency
ESA	Endangered Species Act
MS4	Municipal Separate Storm Sewer System
NOAA-Fisheries	National Oceanic and Atmospheric Administration – Fisheries
NPDES	National Pollutant Discharge Elimination System
ODFW	Oregon Department of Fish and Wildlife
ODOT	Oregon Department of Transportation
TMDL	Total Maximum Daily Load
USFWS	United States Fish and Wildlife Service

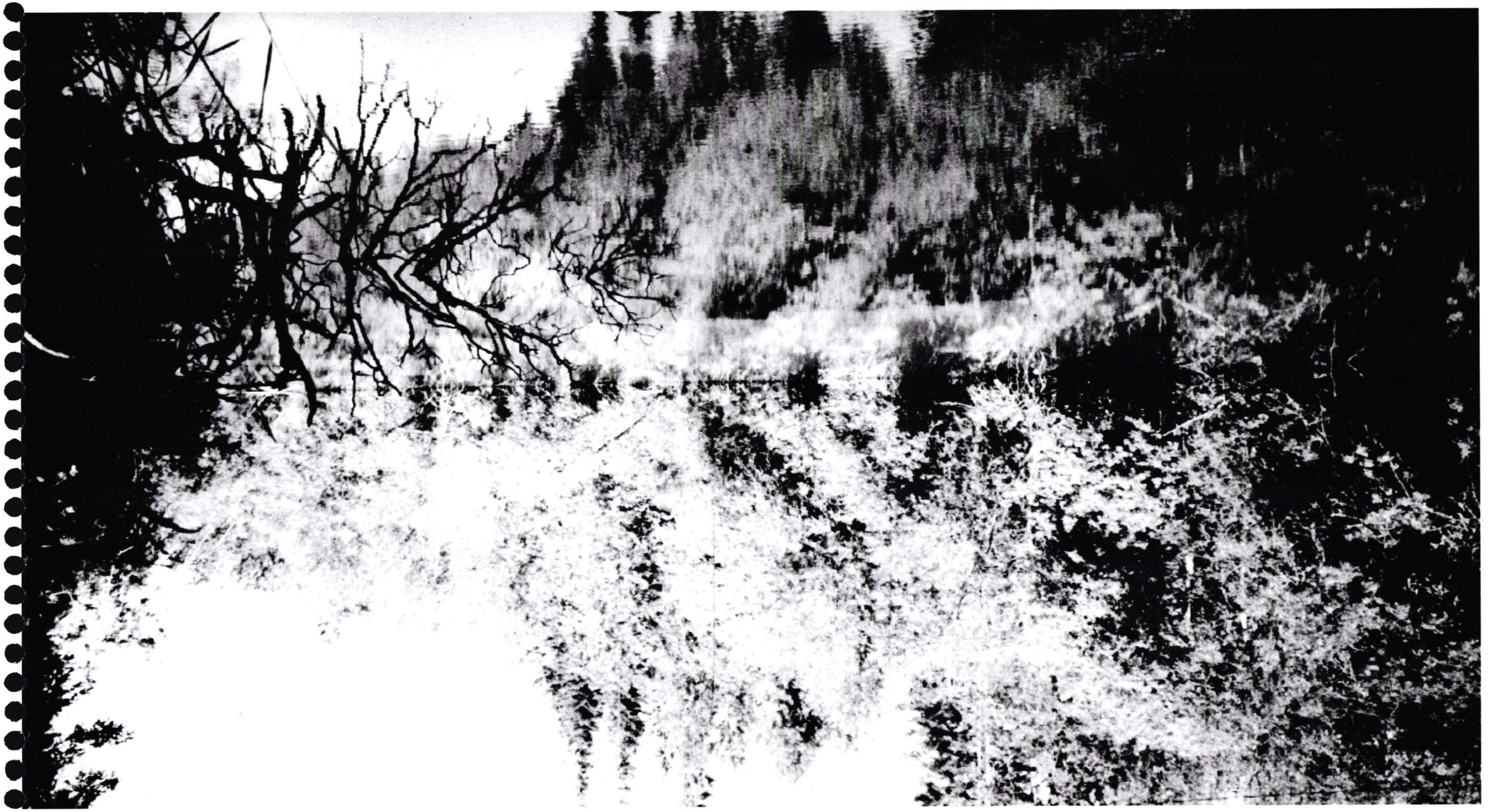



Sustaining Healthy Streams

Human activities have influenced the Tualatin River Basin for centuries. Native Americans burned the plains of the Tualatin Valley to promote big game hunting, and harvested wapato, camas, berries, and other native plants for subsistence living. The early 1800s brought fur trappers from the east who dramatically depleted beaver populations. Settlers drained the wetland complexes formed by beavers and diked the streams to establish extensive farms. The old-growth forested mountains were extensively logged by the 1850s, with logging continuing to the present day. Cities were developed and roads were built.

Many of these activities have harmful effects on the natural environment. In the 1970s, environmental protection regulations were developed to help repair the landscape, improve water quality, and protect at-risk species. Even with these regulations, however, rapid urbanization has impacted the watershed landscape and stream system. While many streams in the Tualatin Basin meet water quality standards under the Clean Water Act (CWA), some do not. Altered watershed conditions and encroachment into floodplains have resulted in damaging floods. Fish and wildlife habitat has been reduced and impaired. In 1999, winter steelhead and spring Chinook were listed as threatened species under the Endangered Species Act (ESA).

Clean Water Services (the District) has worked over the years to respond to these watershed conditions. In 2000, the District began an updated watershed planning process. The purpose was to identify the underlying causes of declining stream health and suggest actions that would help the District improve resource conditions in a prioritized and adequately proportioned manner. The actions were also to be consistent with the goals and intent of the Clean Water Act and Endangered Species Act. Local jurisdictions—cities, Washington County, and special service districts—partnered with Clean Water Services to provide financial assistance and technical and policy advice. The Healthy Streams Plan is the result of that four-year effort. The Plan identifies policy and program refinements, as well as surface water and stormwater projects to be funded through the capital improvement program to improve water quality, water quantity management, and aquatic species habitat.

The Healthy Streams Plan looks beyond standard regulatory requirements in an effort to focus on the overarching needs of the surface water system. It provides an adaptable strategy for managing surface water and promoting overall stream health. It is grounded in the principle of sustainability: meeting the clean water needs of the present, without compromising the ability of future generations to meet their own needs. A sustainable watershed management program balances socioeconomic values with environmental considerations. Accordingly, the planning process included social, economic, and environmental analysis. The Plan's recommendations reflect this integrated approach. The Healthy Streams Plan is consistent with and complements the District's other facility and master plans that address the sanitary and storm systems.

The Healthy Streams Plan is designed to be adaptive. The watershed information will be regularly updated. Clean Water Services and its partners will monitor and adjust actions over time as they gain experience and knowledge and as conditions change. The strategy will inevitably evolve, but the underlying vision and management elements will remain. This adaptive management approach will help the watershed community (those who live, work, and recreate in the watershed) stay on course toward greater watershed and stream health.

The goal of the Healthy Streams Plan is to utilize scientific knowledge and innovation to improve watershed and stream health for community benefit.

The Healthy Streams Plan Advisory Committee created the following vision for the Healthy Streams Plan:

Identify watershed protection and restoration actions that consistently advance stream health throughout the Tualatin River Basin.

To achieve that vision, the Committee advised Clean Water Services to:

Conduct systematic project and policy identification and selection, integrating ecological science with socioeconomic values and public preferences, to determine implementation priorities and meet regulatory requirements, including moving toward the goals of the Clean Water Act and Endangered Species Act."

Healthy Streams Plan
Map 1:Tualatin Watershed



TualatinRiver

streams

N

Miles
00.51 2

Scope of the Healthy Streams Plan

Clean Water Services, in partnership with local jurisdictions and the watershed community, manages the surface water system of the urban portion of the Tualatin River Basin. The surface water system—or "green infrastructure"—comprises the natural streams, wetlands, floodplains, and their associated upland buffers. Water within the system comes from natural surface water and groundwater flow and from two types of discharges: 1) stormwater runoff from impervious surfaces that drains via a constructed storm system and 2) wastewater effluent treated in the wastewater treatment plants.

Clean Water Services has jurisdiction over 292 miles of stream within Washington County's urban growth boundary. The Healthy Streams Plan study area also includes areas outside the urban growth boundary that flow into Clean Water Services' jurisdiction (Map 1). The Healthy Streams Plan project evaluated in detail a total of 338 miles of streams and their associated floodplains and wetlands and approximately 42 miles of the Tualatin River. The detailed study area represents 34 percent of the Tualatin River Basin and primarily covers urban and urban fringe areas.

The Healthy Streams Plan focuses primarily on enhancing the functions of the surface water system (green infrastructure) that are critical to maintaining water quality, quantity, and aquatic habitats. However, the Plan also addresses broad watershed-wide stormwater management issues (such as impervious cover, street sweeping, and storm system inspections), directly connected stormwater outfalls built before 1991, and culverts that are impassable to fish or are deficient in conveyance. These topics are included because of their direct influence on the quality and effectiveness of the surface water system.

The Healthy Streams Plan replaces former watershed plans developed by Clean Water Services, including the Fanno, Rock/Bronson/Willow, Hedges, Butternut, and Beaverton Creek plans. Local drainage plans will continue to be used for storm system conveyance issues that are not directly associated with the streams. The Stormwater Management Plan required for regulatory compliance with the District's watershed permit will be developed by 2006. The Stormwater Management Plan may include some of the recommendations identified in this and other plans as appropriate to meet regulatory mandates.

How Clean Water Services Already Helps Streams

The Tualatin River Basin is a highly regulated and managed watershed. Clean Water Services (formerly the Unified Sewerage Agency) has managed wastewater since the early 1970s, and became responsible for surface water management (SWM) in the urban portions of the Tualatin River Watershed in 1990.

Clean Water Services implements a diverse, strategic program to ensure surface waters meet or exceed water quality standards, protect public health and safety, provide habitat for aquatic species, and are an amenity to the watershed community. To meet National Pollutant Discharge Elimination System (NPDES) stormwater permit requirements, Clean Water Services and its partners implement best management practices for stormwater. These include public education, source control, erosion control, stormwater pretreatment, water quality monitoring, and storm system maintenance. Clean Water Services further improves surface water quality and aquatic habitat by implementing stream enhancement and streamside buffer protections.

The Healthy Streams Plan articulates the latest scientific information related to watershed and stream management, and identifies and prioritizes projects and activities that could be implemented to further improve the District's water resources management. It is standard practice for the District to modify practices, programs, and projects as information is presented and proven to advance surface water protection. The Healthy Streams Plan provides new or updated ideas for some program elements. A chronology that documents the evolution of the surface water management program in the Tualatin River Watershed is provided in Appendix A.

Looking Beyond Regulatory Requirements

The federal Clean Water Act and Endangered Species Act were specifically crafted to protect water quality and at-risk species and their habitats (see Appendix A). These federal laws exert daily influence on the surface water management strategies of Clean Water Services and the local jurisdictions.

In the Tualatin River Basin, the Department of Environmental Quality (DEQ) has focused its water quality regulatory efforts on managing the point sources of stormwater runoff and wastewater effluent. DEQ has identified phosphorous, ammonia, bacteria, biological criteria, dissolved oxygen, and temperature as constituents of concern that impair the beneficial uses of the surface water system, such as water contact recreation, fish communities, and salmon spawning and rearing in some portions. Clean Water Services and its partners manage pollution by implementing extensive stormwater and wastewater treatment and maintenance strategies, as required through NPDES permits (see previous section). Dramatic water quality improvements have been made over the last 30 years through the construction of advanced sanitary and stormwater infrastructure. Now, the challenge is to more effectively manage the diverse and diffuse non-point sources of pollution.

Clean Water Services

Vision: Enhance the environment and quality of life in the Tualatin River Watershed through visionary and collaborative management of water resources in partnership with others.

Mission: Provide cost-effective services and environmentally sensitive management of water resources for the Tualatin River Watershed.

To achieve the vision and mission, Clean Water Services conducts comprehensive planning efforts before implementation to ensure that interrelated programs and projects are aligned.

Metro estimates that the population of the Tualatin River Watershed will increase from 455,000 today to over 700,000 by 2040. Given this potential growth, strategies for preserving the high quality of life and the environment must be formulated. Watershed planning must integrate social, economic, and environmental elements in a manner that promotes sustainable growth in all sectors.

Sharing the Vision

The Healthy Streams Plan process considered and drew from the social, economic, and environmental visions of other groups in the Tualatin River Watershed:

- The Vision Action Network has unified community members from all sectors (faith, business, not-for-profit, advocacy, citizen organizations, education, and government) to identify practical, collaborative strategies that help address long-standing community and social concerns.
- The Westside Consortium for Economic Health, consisting of business and government leaders, has identified regional strategies that will maintain and promote economic growth and stability in the Tualatin River Basin. Its strategy focuses on four interlocking elements of people, place, clusters, and leadership (Westside Consortium for Economic Health 2003).
- The Tualatin Basin Watershed Council is a diverse group of community stakeholders with a watershed vision of "a balanced ecosystem that supports a healthy watershed, provides for an economic base and viable communities" (Tualatin Watershed Council 1999).
- Some local jurisdictions also have vision and action plans for their communities that address watershed issues.

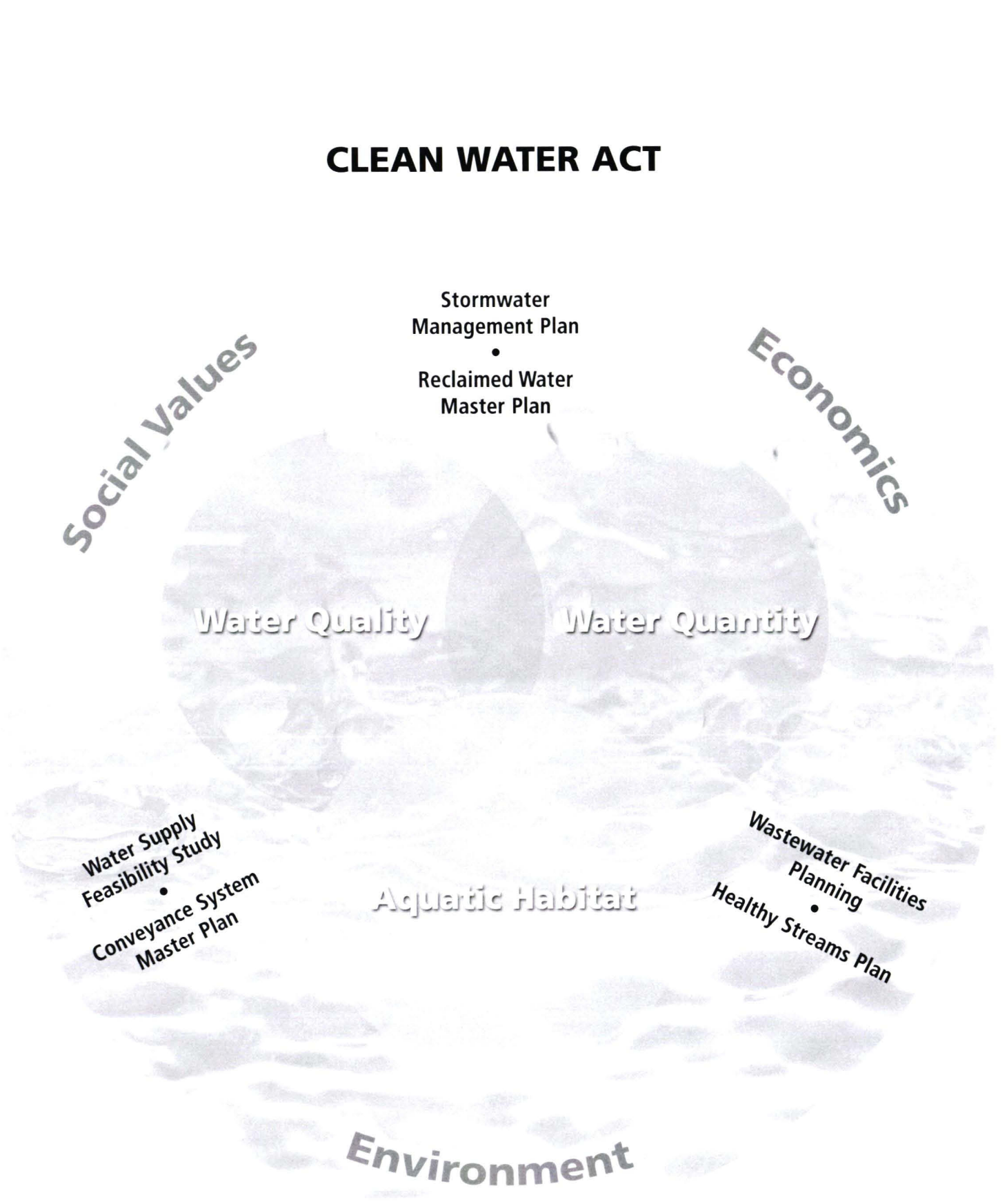

Clean Water Services and its partners focus on achieving the greatest overall environmental benefit with the limited financial resources available. Activities already underway include, but are not limited to:

Surface Water System (Green Infrastructure)

- **Watershed planning**
- **Vegetated corridors and sensitive area regulation**
- Capital project construction to enhance streams and wetlands and repair culverts
- **Community-based, non-profit partnerships and sponsorship of intergovernmental events** to clean up streams, plant trees, and remove invasive species
- **Public education**, including streamside technical assistance to property owners, investigation of reported illegal streamside activities, and the River Rangers childhood education program
- **Public awareness** through brochures, print ads, and media campaigns
- **GIS (geographic information systems) mapping and database management** to track activities
- **Water quality, fish, macroinvertebrate, and flow monitoring**

Stormwater Infrastructure

- **Storm system drainage planning, monitoring, and mapping**
- **Stormwater regulation**, including the pretreatment of polluted stormwater runoff through stormwater facilities
- **Storm system capital improvements** to improve outfalls, stormwater facilities, and pipes
- **Pollution prevention** through regulating, inspecting, and enforcing erosion and pollutant source controls
- **Storm system maintenance** of catch basins, storm lines, facilities, and street sweeping
- **Water quality monitoring**

Sanitary Infrastructure

- **Master planning** for sanitary sewer and wastewater treatment facilities
- **Installation and maintenance of the sanitary conveyance system and pump stations**
- **Operation and maintenance of state-of-the-art wastewater treatment plants**
- **Augmentation of river** flows during the summer to improve water quality

The Healthy Streams Plan suggests projects and activities that can help the District and its partners to meet strict water quality standards. Improvements to the green infrastructure, through which all surface waters flow, can help preserve and protect water quality and aquatic species by reducing non-point sources of pollution such as channel erosion and ultraviolet light impacts. This "soft," green surface water system is important because even with clean water from the storm and sanitary system, the Tualatin River and its streams would still lack needed flow, canopy, and habitat necessary for the surface water system to maintain good water quality. For this reason, the Healthy Streams Plan looks beyond the standard regulatory requirements for managing discharges and incorporates elements of an integrated water resources management strategy that will promote an ecologically healthy and self-sustaining system.

Planning Context for the Healthy Streams Plan

The Healthy Streams Plan is one piece of the District's Integrated Water Resources Management (IWRM) strategy to protect the health of surface water resources and the vitality of the watershed community by integrating the water quality, water quantity, and habitat needs of the Tualatin River Basin. All water resource supplies and demands in the watershed are interconnected. Understanding their interrelationships is critical to efficient management of the resource.

The District has developed an internal interdisciplinary team that reviews and considers planning for surface water; the treatment plants; storm and sewerage conveyance; and water supply for drinking water, irrigation, flow restoration, and reclaimed water (Figure 1). A comprehensive look at these programs helps the

How this Document Is Organized

Part I

Action Plan, presents the recommendations of the Healthy Streams planning process. It includes:

- The priorities underlying the recommendations
- Guiding principles
- Refinement options for existing policies and programs
- Capital improvement projects
- Implementation and monitoring

Part II

Summary of Data and Analyses, provides the socioeconomic and scientific data and analysis used to develop the recommendations in the Action Plan. Details on methodology, data, and maps are available through the electronic Appendices and Internet links provided in the text.

- **Chapter 1:** Social Data and Analysis, addresses population trends and demographics, community values, public habits and behaviors, and public awareness of water resource issues.
- **Chapter 2:** Economic Data and Analysis, addresses the costs and benefits of watershed improvements and the financing options available to implement the Healthy Streams Plan.
- **Chapter 3:** Environmental Data and Analysis, describes current baseline environmental conditions in the watershed.
- **Chapter 4:** Projects, Programs and Priorities, describes how the gathered information was analyzed and projects were developed and prioritized before being integrated into the Action Plan.

Part III

Literature and Appendices, provides background and more detailed information in an electronic format.

District to effectively and efficiently manage and/or influence the policies of water resources management in the Basin. Recommendations from the Healthy Streams Plan will complement strategies for stream and river flow restoration, reclaimed water use, temperature management, and NPDES permit compliance.

Clean Water Services began the Healthy Streams Plan as an effort to update and finish watershed plans, integrating Clean Water Act and Endangered Species Act issues into the process. The Plan is not designed to be a regulatory document. Instead, it is meant to guide the adaptive management of the surface water system. The Plan was built upon the recommendations of the Surface Water Management (SWM) Framework, an assessment of the 10-year-old storm and surface water management program that was completed in 1999 (USA 2000). Through an extensive public involvement and analysis of stakeholder values, the Framework identified the surface water management program's successes and opportunities. The information and guidance developed during the Framework process were integrated into the Healthy Streams Plan's scope and suggested actions.

The Healthy Streams Plan gathered extensive watershed and stream base data through the Watersheds 2000 inventory. The water resource modeling, topographic/stream survey, and ecological data were used to produce GIS-based (geographic information system) watershed analysis, update floodplain maps, identify priority enhancement projects, and evaluate policy and program refinement options.

In addition to collecting and analyzing environmental data, the Healthy Streams Plan process analyzed socioeconomic costs, benefits, and values. This included considerable public involvement through committees, surveys, and stakeholder discussions. Three regional project committees participated in the Watersheds 2000 inventory, and were merged into one Healthy Streams Plan Advisory Committee in 2002. These committees contributed invaluable review and comment and helped articulate public values. The Advisory Committee developed a vision and mission that provided overall guidance for the Healthy Streams Plan (see page 2). It also identified goals and action principles, which are outlined in Part I: Action Plan.

Implementation of the Healthy Streams Plan began before the actual document was even complete. The products developed during the planning process (such as modeling, mapping, surveys, and environmental analysis) are used to more efficiently implement capital improvement projects along streams. The information is also being used by local jurisdictions and developers to evaluate requirements for floodplains, streams, and other resources.



PART
1

Healthy Streams Action Plan

Introduction

The Healthy Streams Action Plan identifies short-term and long-term policy and program refinement options and capital improvement projects that could be implemented to improve watershed and stream health. The Action Plan integrates the vision and values expressed by the public (see Introduction) with the social, economic, environmental, and ecological analysis (see Part II: Chapters 1-4). It focuses on improving the basic surface water management activities that Clean Water Services (the District) and its local partners already implement. The Action Plan also identifies policy and program refinement options, which may be expanded upon or reduced via other implementation efforts (e.g., Storm Water Management Plan, Reclaimed Water Plan, land use planning, design and construction standards updates), depending on regulatory, political, and/or financial constraints.

The Action Plan is designed to "plan and act on multiple levels" to support a "sustainable system that goes beyond just tangible physical facilities" by "updating and maintaining management plans, refreshing educational programs and continuing or renewing commitments to regular intergovernmental partnering" (Surface Water Management Framework, USA 2000). Many of the Action Plan's detailed actions were developed from the general guidance provided in the Framework and the stormwater best management practices outlined in the 2000 Stormwater Management Plan.

The Healthy Streams Plan Advisory Committee affirmed this approach by suggesting that Clean Water Services and the watershed community:

- Protect streams where highly valued watershed functions are at or moving towards healthy stream targets.
- Enhance streams where improvements to watershed functions will help avoid further degradation and move the stream towards healthy stream targets.
- Create a new desired condition for streams where watershed functions are significantly impaired and not likely to fully recover, but could still support a variety of beneficial functions for the community.

Assigning Priority and Proportion to Actions

Understanding the interrelationships among the socioeconomic and environmental variables at multiple spatial and temporal scales is critical to developing a successful action plan. The watershed planning process addressed issues of scale and proportion by considering properly functioning watershed and stream conditions, defining stream health targets, and assessing how much stream reaches currently depart from the health targets. A variety of techniques were then employed to refine the approach and set priorities for capital projects and policy/programmatic refinements. These included detailed analysis of field data and review of relevant research; identification of priority watershed areas; application of the RESTORE model (a tool for making decisions about enhancement strategies); and evaluation of fish passage and conveyance through culverts. The watershed-scale policy and programmatic refinements complement the site-specific capital projects, addressing issues that are more global in nature, such as hydrology and land use.

It is ecologically and economically impossible to fully restore the entire watershed to historic conditions. Opportunities exist, however, to advance surface and stormwater management activities more rapidly. The Action Plan offers a menu of options that can improve watershed conditions to varying degrees over variable timeframes. Such stream enhancement and stormwater management actions can improve, but not fully remedy, historic impacts to the surface water infrastructure.

Given the limits of restoration, watershed managers all over the country are shifting their sights from treatment to prevention. It is easier to protect a healthy watershed from impact than it is to restore a degrading, unhealthy watershed. Watershed managers are now able to anticipate future problems in healthy watersheds and employ effective tools to prevent degradation (Schuler and Holland 2000). In the Pacific Northwest, researchers recommend focusing watershed management on **preservation** where resource values are high, and on **prevention** of further degradation and **enhancement** of riparian zones where function is impaired, but not lost (Horner et al. 1996). In analyzing the data and formulating recommendations, Clean Water Services drew a similar general conclusion: **Protect the best, and enhance the rest.**

Guiding Principles

Early in the planning process, the project committees established the following guidelines to help set project priorities:

- **Define the project in a watershed context.**
- **Address multiple benefits/stream corridor functions.**
- **Implement cost-effective projects that maximize environmental benefits for dollars spent.**
- **Avoid policies that would be detrimental to land use.**
- **Implement projects with a high probability of success, based on surrounding conditions and proven techniques.**
- **Focus on addressing ecological functions from the top down.**
- **Connect and grow projects outward from healthy areas.**
- **Maintain flexibility and collaborate with other public works projects.**
- **Protect the best and enhance the rest.**

Later, the Healthy Streams Plan Advisory Committee added to the guidelines previously developed by the project committees, including:

- **Construct the most financially feasible, cost-effective projects, strategies, and policies.**
- **Encourage community involvement and basin partnerships.**
- **Promote intergovernmental cooperation and coordination.**
- **Address legal and regulatory requirements proactively.**
- **Apply watershed principles and emphasize natural conditions where feasible and applicable.**
- **Consider the complete range of solutions.**
- **Use an adaptive management system to monitor and adjust project actions.**
- **Develop a financing plan or funding strategy that is publicly acceptable and moves toward system recovery in a timely manner.**

Combined, these guiding principles were used to formulate policy and program refinements and to develop prioritization criteria for selecting annual capital projects for surface and stormwater (see Capital Improvement Program on page ____).

Policy and Program Refinement Options

Table I-1 identifies a variety of policy and program refinements that could increase the effectiveness of the urban surface water and stormwater management program. A majority of these non-construction actions were previously identified and/or recommended in the Surface Water Management Framework, the Board-accepted watershed plans for Fanno and Beaverton Creeks, and the District's 2000 Stormwater Management Plan.

As noted in the table, some of the options have been acted on concurrently with the development of the Healthy Streams Plan. The table also lists the rationale and interrelated programs to show how the proposed refinements relate to other efforts by Clean Water Services and the local jurisdictions. The extent and specifics of the options will be further defined as the options advance toward implementation or are incorporated into other District processes. The costs associated with the suggested refinements are assumed to be predominantly operational (part of existing District and City staff general duties), and within the budgets of the existing programs. Project costs are estimated for options that would require consultant or material assistance, and estimated operating costs are assigned to options that need additional staffing (see Appendix B)

Regional Regulations

Regional and local regulations are developed and/or revised as knowledge of environmental management issues improves. To reduce the impacts of urbanization on water quality, water quantity, and aquatic species, Clean Water Services regulates the stormwater, surface water, and sanitary sewer systems through its design and construction standards. Metro, the cities, and Washington County regulate land use, building, and transportation to promote safe, orderly development of urban environments, while still maintaining the critical resources (water, air, soil, vegetation) that the community depends upon or demands. The District and Metro apply their requirements regionally, while the cities and county implement their regulations locally. However, Washington County jurisdictions have increasingly operated on a sub-regional level to ensure consistency and substantial compliance with federal, state, and regional mandates.

The urban stream data collected and analyzed during the project, as well as extensive scientific literature (see Part III), suggest that streams are being impacted by changing watershed hydrology (increasing scouring stormwater flows and decreasing summer base flows), which in turn alters geomorphic and vegetative functions. Loss of geomorphic equilibrium and riparian cover degrades water quality and aquatic habitat and further alters hydrology. To reduce the impacts of urbanization and advance stream health, three areas of regulation were identified for improvement: onsite stormwater (quality and quantity) management, sensitive area/vegetated corridor management, and land use regulations.

Timeline and Costs for Policy and Program

Appendix B contains planning-level estimates of implementation costs for the various options, which are summarized in Table I-7. Appendix B also provides an implementation timeline for 2005-2010. Some of the options are discrete projects, while others will be ongoing once fully developed and implemented. The costs reflect the estimated additional staff cost per year or the project cost, as appropriate. It is anticipated that a majority of the proposed refinements will be implemented by existing staff as part of their current jobs. The actions would be further developed and implemented as they became a priority and/or time-critical to meet other regulatory mandates, such as the MS4 (municipal separate storm sewer) portions of the NPDES permit, Goal 5 regional planning, or compliance with the Endangered Species Act.

Preserving and enhancing the surface and stormwater system requires assistance from the entire watershed community. Some stakeholders have expressed the desire to eliminate onsite treatment and use regional facilities. Watershed health cannot be achieved with only one or two strategies or entities; both regional and onsite tools are needed. The Healthy Streams Plan recommends alternative onsite design options and approaches that will help developers better integrate stormwater as an amenity in site designs. These alternatives may eliminate the need for typical facilities in some areas, reducing both public and private maintenance requirements. There are insufficient low-cost upland areas to implement public regional facilities. However, stream corridor enhancements are considered a regional approach because they provide "treatment" of surface waters by regulating light input, sediment, and nutrient transport. The Policy and Program Refinements section below suggests design adjustments for onsite facilities, and the Capital Improvement Program section addresses local and regional projects.



Onsite Stormwater Quality and Quantity Management

The District currently has design and construction standards for onsite stormwater management to help reduce the impacts of stormwater runoff from individual development activities. Stormwater quality management reduces the transport of pollutants to streams by implementing erosion control and requiring stormwater treatment through a variety of best management practices (such as swales, ponds, or other devices) before stormwater is discharged to surface waters. Stormwater quantity management currently focuses on the conveyance capacity of the storm system and on flood risk. The standards do not currently address the cumulative changes in watershed hydrology resulting from urbanization.

To enhance the effectiveness of and increase options for managing onsite stormwater, the policy and program refinements include the following concepts:

- **Disperse and retain low-intensity rainfall to facilitate groundwater recharge and protect stream channels from scouring flows. Allow the use of effective impervious area management techniques, such as improved landscape design and impervious surface alternatives, to eliminate and/or slow the flow coming from the site during smaller storm events.**
- **Manage the change in storm peaks and volumes resulting from development to more closely mimic the pre-existing hydrographs in the watershed. Allow the use of other creative site design alternatives to manage infrequent detention events that will reduce the impacts to stream channels, while managing conveyance and flood risk.**
- **Treat only the runoff that is contaminated – predominantly from auto-related surfaces. Allow the use of alternative, cost-effective, easy-to-maintain treatment technologies that are effective in capturing the type and mass of pollutants anticipated to run off the site.**

The options for refining onsite stormwater management (Table I-1, section 1.0) will require coordination with the land use jurisdictions to ensure there are no barriers to implementing innovative techniques. Specific tasks related to the land use component of stormwater management are presented in Table I-1, section 2.0.

Table 1-1: *Policy and Program Refinements*

	POLICY AND PROGRAM OPTIONS (COMPLETE / UNDERWAY / PROPOSED)	RATIONALE	PARTNERS (Bold = Lead)	INTERRELATED PROGRAMS (SEE KEY)
1.0 Stormwater Regulation				
1.1	Improve the consistency of hydrologic modeling for development sites. Develop an easy to use tool for stormwater mitigation that accounts for the site location, pollutant washoff, runoff timing, duration, and volume.	On-site treatment and detention requirements do not consider site specific pollutant washoff or cumulative quantity management impacts of urbanization. Identified in the SWM Framework	**District** Cities County Design Engineers	**1,2,3**
1.2	Re-examine storms to determine capture rates and treatments that optimize pollutant removal (total suspended solids) from stormwater. Set water quantity management standards to retain stream hydrograph.	City of Portland, WA. Department of Ecology, and NOAA-Fisheries recommend alternative standards for pretreatment and quantity management to reduce the impacts of urbanization.	**District** Cities **County**	**1,2,3**
1.3	Develop stormwater maps that identify the most appropriate strategies for different subwatersheds. Subwatersheds with existing imperviousness of less than 10% could be "capped" to preserve stream health while ones with higher imperviousness could have a sliding scale, to allow for higher density.	National and Pacific Northwest research identifies watershed imperviousness as a key factor in determining stream health, with 10% imperviousness as a threshold.	**District** **Cities** County	**1,2,3,4**
1.4	Develop a policy that requires "cleaner" runoff from sidewalks, patios, and certain rooftops to be retained and infiltrated into the ground, where practicable. Pretreatment of runoff would be limited to vehicle surfaces and certain types of rooftops (restaurant and galvanized metal).	Removing "clean" stormwater runoff from the system will reduce the size of pretreatment facilities and help recharge shallow groundwater for improved stream base flows.	**District** Cities County	**1,2,3**
1.5	Develop standards and stormwater quantity mitigation credits for effective impervious area reduction techniques such as landscaping, planter boxes, eco-roofs, pervious pavers, green streets, and porous concrete. Prepare brochures for designers to assist them with "selling" the concepts to their clients (complete).	Identified as a priority in the SWM Framework. Portland, jurisdictions in Washington, and NOAA- Fisheries recommend alternatives to "slow the flow", to protect streams and wetlands. Alternative treatments could potentially reduce public facility maintenance requirements and delay conveyance upgrades.	**District** Cities County	**1,2,3,4**
1.6	Increase pretreatment design options available for different land use types, including filters for ultra urban, high load sites. Stormwater wet ponds and extended dry ponds should be re-evaluated to address aesthetics and mosquitoes.	Identified in the SWM Framework. Applying pretreatment techniques based on anticipated pollutants and loading will ensure optimal treatment at appropriate short and long term costs.	**District** Cities County Design Engineers	**1,2,3**
1.7	Require maintenance agreements for all private storm systems. District and Cities develop standard language of an Agreement, which should include a provision for the District / City to take over maintenance and bill the owner if maintenance is not occurring.	Identified in the SWM Framework. An evaluation of private facilities suggests that increased inspection and enforcement are necessary to ensure the private systems are properly maintained.	**District** **Cities** Landowner	**1,2,3**

Table 1: *Policy and Program Refinements (continued)*

POLICY AND PROGRAM OPTIONS (COMPLETE / UNDERWAY / PROPOSED)		RATIONALE	PARTNERS (Bold = Lead)	INTERRELATED PROGRAMS (SEE KEY)
2.0 Local Land Use and Building Codes				
2.1	Allow required landscaping areas to also serve as stormwater quantity facilities. Encourage landscape areas be inverted or below impervious grade wherever practicable to allow water to drain to such areas.	All pervious area can provide stormwater quantity mitigation for the 2-year storm and less. This would allow developers to get "double credit" for landscaping and stormwater.	District **Cities** **County** Design Engineers	**1,2,3,4**
2.2	Allow alternative parking lot and street designs per Metro's Green Streets guidelines, where safety considerations allow. Allow curb cuts to pass flows into facilities in parking lots. Limit piped drainage systems wherever practicable. Allow for alternative pavement and concrete treatments. Create adjustable criteria for different site conditions.	National and Pacific Northwest research identifies watershed imperviousness as a key factor in determining stream health. Reducing runoff, reduces the amount of stormwater needing to be treated.	District **Cities** **County** Design Engineers	**1,2,3,4**
2.3	Require "cleaner" runoff from non-vehicle surfaces to drain to pervious areas to the maximum extent practicable (sidewalk pitching, roof drain discharges).	Removing "clean" stormwater runoff from the system will reduce the size of pretreatment facilities and help to recharge shallow groundwater for improved stream base flows.	District **Cities** **County**	**1,2,4**
2.4	Specify diverse alternatives for the definition of "approved drainage" in local codes so that plumbing inspectors can approve non-pipe drainage alternatives and still comply with the uniform plumbing code.	The barrier for implementation of impervious area reduction is often the plumbing / building code, which states that water must drain to an approve "facility".	District **Cities** **County** State	**1,2,3,4**
2.5	Allow for cluster or lower density development in priority fish areas and steeply sloped headwaters in order to maximize canopy cover retention. Allow for density reductions in priority areas, and for storm water facilities.	The steeply sloped headwater areas of the Basin represent the best habitat for anadromous and resident trout, preserve water quality, and manage water quantity.	District **Cities** **County** **Metro**	**4,5,6**
2.6	Provide general authorization or limited review for stream enhancement activities implemented by government entities, if State/Federal permits have been obtained and/or the project is overseen by the District. Native planting and invasive species removal in sensitive natural resource areas should be allowed without a land use permit.	Land use review of tree planting and stream enhancement add unnecessary time and cost to the activities. Permit streamlining is needed to maximize implementation for the least cost.	District **Cities** **County**	**4,5,6**

Land Use, Building, and Transportation Codes

Metro, the cities, and Washington County develop and enforce land use, building, and transportation codes to guide the type, location, and design of land-altering activities, such as development, road building, and home construction. The impervious surfaces created by such land-altering activities generate stormwater runoff that must be managed. Allowing greater flexibility in where and how stormwater can be integrated into landscaping, building design, and parking lot and road design will increase efficient use of available lands and reduce the long-term site and system maintenance costs of stormwater management. It will also be critical to streamline reviews and remove barriers to implementing stream enhancement projects in order to rapidly advancing the Action Plan. Table I-1, section 2.0, suggests the type of code adjustments that could be made to improve efficiencies and reduce barriers to more integrated onsite stormwater management and streamlined enhancement.

Sensitive Areas and Vegetated Corridors

Sensitive areas and vegetated corridors provide the water quality, quantity, and habitat benefits associated with an open surface water system. The District works to protect the surface water infrastructure through design and construction standards. The standards reduce development impacts to water quality along the Tualatin River, all streams, and wetlands by limiting activities in sensitive areas and establishing vegetated corridors (buffers) around sensitive areas. The standards also require the corridors to be improved to a good condition in order to provide adequate buffering function between the development activity and the resource.

Observations during the inventory phase of the Healthy Streams Plan suggested the continued need to protect and enhance sensitive areas and vegetated corridors, as well as the need to educate streamside property owners. Streams with adequate buffers and high-quality riparian vegetation were consistently healthier than streams lacking such features.

The District's sensitive area and vegetated corridor standards have been in place since February 2000 and were updated in 2002-2003, concurrent with the Healthy Streams planning process. Table I-1, section 3.0, shows the options that were implemented to improve the effectiveness of the existing code, which became effective March 1, 2004.

Table 1: *Policy and Program Refinements (continued)*

POLICY AND PROGRAM OPTIONS (COMPLETE / UNDERWAY / PROPOSED)		RATIONALE	PARTNERS (Bold = Lead)	INTERRELATED PROGRAMS (SEE KEY)
3.0 Sensitive Areas and Vegetated Corridors Regulations (continued)				
3.1	Increase the vegetated corridor requirement for high gradient intermittent headwater streams.	Field observations identified impact, and Pacific Northwest studies that identified headwaters as critical to stream health. Such action would reduce landslide hazard, protect critical habitats downstream, and maintain hydrologic functions of the most sensitive water resources	**District** Cities County Homebuilders Business Environmental	**3,4,5** **6,7**
3.2	Increase the vegetated corridor requirement for the river.	NOAA- Fisheries recommends a 200 foot minimum buffer. Such action would protect against bank erosion and flooding of structures.	**District** Cities County Homebuilders Business Environmental	**3,4,5** **6,7**
3.3	Add redevelopment in the definition of development so that a minimum buffer and pretreated stormwater runoff will be required.	Identified in the SWM Framework. Establishes an equitable standard for all development to pretreat stormwater and preserve the green-infrastructure.	**District** Cities County Homebuilders Business Environmental	**3,4,5** **6,7**
3.4	Clarify provisions for revegetation, path alignments, predevelopment clearing, drainage paths, tree cutting, and utility hookups.	Current Standards need clarification to reduce mis-interpretation	**District** Cities County Homebuilders Business Environmental	**3,4,5** **6,7**
3.5	Develop a limited Payment to Provide Program to offer a payment option to implement vegetated corridor standards on sites with redevelopment or where the State/Federal jurisdictions have removed a Sensitive area through their Payment to Provide Program.	Redevelopment sites and sites where the resource is being removed, have less corridor than typical development sites. Payment to Provide allows the District to apply funds to a "buffer bank" which makes up for the loss of buffer elsewhere.	**District** Landowners	**3,4,5,7**

Table 1: *Policy and Program Refinements (continued)*

	POLICY AND PROGRAM OPTIONS (COMPLETE / UNDERWAY / PROPOSED)	RATIONALE	PARTNERS (Bold = Lead)	INTERRELATED PROGRAMS (SEE KEY)
4.0	***Operations and Maintenance of the Storm System (continued)***			
4.1	Utilize GIS to map of high pollutant accumulation and washoff areas (commercial, industrial, multifamily, highways, and major arterials) and areas lacking pre-treatment facilities (pre-1990 development). Focus street sweeping, catch basin and line maintenance in selected test subwatersheds from August through October. Assess the costs of such actions relative to the benefits observed. Consider the purchase of one regionally utilized (and funded) vacuum assisted high efficiency sweeper to sweep the high loading areas.	More strategic maintenance of the public and private stormwater system was identified as a priority in the SWM Framework. Increasing cleaning activities in areas with the highest pollutant accumulation and washoff may reduce (see monitoring companion) pollution loading in areas that do not have facilities. Cleaning could be reduced in low load areas to offset the extra efforts in high load areas.	**District Cities**	**1,3,6**
4.2	Set performance targets for optimal leaf pickup throughout the urban areas from November-December. Encourage cities to conduct leaf pickup programs, if they do not do so already.	More strategic maintenance of the was identified as a priority in the SWM Framework. Leaf pickup reduces storm line cogging and the transport of leaves and organic "mush" into the storm system.	**District Cities**	**1,3,6**
4.3	Maintain and vegetate any stormwater facilities that are eroding or need additional plant material. Remove and manage invasive species at facililty sites. See Community Tree Planting in capital project list and funding.	SWM Framework identified the continued maintenance of existing on-site facilities a priority. Vegetating facilities reduces erosion, increases sedimentation, reduces long term maintenance (mowing), and improves aesthetics.	**District Cities**	**1,3,6**
4.4	Ensure ditches are adequately stabilized and /or revegetated before allowing them to transport runoff. Consider use of pre-fabricated vegetative mats on sites that require cleaning during the rainy season. Focus such efforts in areas within 200 feet of a stream.	Freshly cleaned ditches can transport raw soil to streams. Prevegetated mats near the outlet would provide a vegetated swale to reduce loading to the stream.	**District Cities**	**1,3,6**
4.5	Implement a policy of complete water capture when cleaning lines, to avoid flushing any accumulated sediment from pipes into the stream. Offer yearly training and reminders regarding line flush capture (see below).	Ensuring the capture of line cleaning the flush water reduces the impacts of discharging sediment laden water to streams.	**District Cities**	**1,3,6**
4.6	Implement yearly environmental training and awards program for City, County, Parks, and District field operations staff. Conduct quarterly visits to raise awareness of the needs of streams and aquatic species and how important maintenance practices are in aiding system recovery.	Maintenance staff play a critical role in protecting the environment, but are rarely rewarded or reminded of their importance in effective watershed management. More frequent visits with staff will improve lines of communication and reinforce positive practices.	**District** Cities	**1,3,6**
4.7	Complete the mapping of the stormwater system for public and private facilities. Link customer complaint data to maps. Each jurisdiction should complete its own mapping using a standard format and submit information quarterly to the District.	The SWM Framework identified mapping as a priority action. Regionally based mapping will improve efficiency in evaluating the system and monitoring complaints.	**District Cities**	**1,3**

Operations and Maintenance of the Storm System

Clean Water Services, the cities, and Washington County share operations and maintenance of the public storm system. Through the Conveyance Systems Management Study, these entities have streamlined processes and increased efficiencies of the maintenance program. Table I-1, section 4.0, identifies options that could further reduce pollutant transport from impervious surfaces to the stormwater system by targeting certain maintenance efforts to specific locations and critical times. To maintain efficiency gains, it is suggested that maintenance activities shift focus to high pollutant loading areas at during the late summer and early fall rather than increase production. Other suggestions include best management practices for day-to-day, water-sensitive operations, and the need for mapping.

Inspection and Code Enforcement

Inspection of the storm system and enforcement of the design and construction standards are crucial for effective surface and stormwater management. The District and cities currently inspect onsite construction for erosion control, pipes, stormwater facilities, and vegetated corridors. The District also inspects post-construction sites and responds to illegal disposal activities through its source control program. Table I-1, section 5.0, recommends options to improve inspection and enforcement of post-construction private facilities and of the vegetative component of facilities and corridors. Opportunities for training and cross-trained inspection are also suggested.

Table 1: *Policy and Program Refinements (continued)*

	POLICY AND PROGRAM OPTIONS (COMPLETE / UNDERWAY / PROPOSED)	RATIONALE	PARTNERS (Bold = Lead)	INTERRELATED PROGRAMS (SEE KEY)
5.0 Inspection and Code Enforcement				
5.1	Develop an inspection and maintenance program for private stormwater facilities, pre-1990 commercial drainage systems, and multifamily residential areas via the District's source control division. Map typical "hot spot" areas (garages, quick stops, gas stations, high volume commercial sites) and overlay with pollutant loading and pre- 1990 land use to determine priorities.	The Center for Watershed Protection identified "hot spot" pretreatment as a critical early action to address stormwater runoff pollution. Stormwater man-aitoring data shows locations with high traffic and car based commercial activities, and multifamily residential housing are more likely than other areas to have high pollutant loads.	**District** **Cities**	**1,3,6**
5.2	Assign specialized inspectors in the District to enforce the vegetated corridors and stormwater facility provisions of the Standards. Inspectors should be trained in vegetation requirements and provide inspection reports to ensure Standards are being met.	The SWM Framework identified regulatory compliance a high priority. According to District inspectors and field observations, there is a lack of understanding and training of City inspectors regarding the Vegetated Corridor and vegetation requirements of the Design and Construction Standards. Failure to implement the vegetation requirements dictates that ratepayers will eventually have to pay for the cost of development, rather than the developer.	**District** Cities	**1,5,7**
5.3	Offer annual training on the Design and Construction Standards to local planners, engineers, and inspectors, as well as private engineering planning and design staff.	The SWM Framework identified technical assistance as a priority. Improving training and awareness of the Standards should facilitate more efficient review and approval, and lower design costs.	**District** Cities County	**1,3,5**
5.4	Cross train staff that walk sanitary lines along creeks, to also identify and address near stream dumping, erosion and other water quality problems. Establish a system for prompt response and resolution.	The SWM framework identified enforcement of standards through increased inspection and compliance remedies as a priority action. The District currently relies on local code enforcement officers to address all non erosion or source control related activities such as tree cutting, yard debris dumping, etc. Improved communication and delineation of responsibility will improve effectiveness and reduce staff time dedicated to various compliance issues.	**District** **Cities** Landowners	**3,5**
6.0 Incentives				
6.1	Reduce property taxes or provide a credit to streamside property owners that sign management agreements or easements that result in preservation or enhancement of healthy riparian areas. Consider implementing the Riparian Tax Credit Program and the Wildlife Habitat Conservation Management Program.	Streamside property owners can directly influence the quality of the riparian areas. Owners identified a property tax incentive as a strategy that would encourage a change in behavior and site management.	**Cities** **County** Landowners	**4,5**

Table 1: *Policy and Program Refinements (continued)*

POLICY AND PROGRAM OPTIONS (COMPLETE / UNDERWAY / PROPOSED)		RATIONALE	PARTNERS (Bold = Lead)	INTERRELATED PROGRAMS (SEE KEY)
6.0 Incentives				
6.2	Implement a partnership policy that allows the District to fund projects throughout the Tualatin Basin, rather than just within District jurisdictional boundaries. All partnerships would be voluntary, but would require assurances that public dollars spent would result in permanent environmental benefits.	Expanding partnership opportunities outside the District boundaries will allow more cost effective implementation of water resource improvements.	**District** NRCS Department of Forestry Landowners	**5,8**
6.3	Implement a consistent, standardized "preservation" payment to streamside property owners that grant permanent easements or sign stewardship agreements that result in greater water resource protections outside the urban growth boundary.	SWM easements are currently negotiated based on a percentage of the land appraisal. To reduce "hold outs", the District could develop a refined criteria and a clear payment structure for easements related to protection.	**District** Metro Cities County Landowners	**4,5**
6.4	Implement cost share agreements for redevelopment property owners that apply and enhance the required vegetated corridor. Agreements will be on a project by project basis.	Redevelopment is more costly than development on vacant land, as is establishing vegetation along highly degraded stream corridors. A cost share program helps avoid discouraging redevelopment activities near streams.	District **Cities** Landowners	**4,5**
6.5	Provide technical assistance and free trees to streamside property owners willing to monitor and maintain the plantings. See Community Tree Planting Challenge in capital projects.	Trees help to enhance stream health, improving water quality and aquatic species habitat. Stakeholder surveys have identified free trees and tree planting as an incentive to encourage revegetation of riparian areas.	**District** **Cities** Landowners	**1,4,5**
6.6	Implement a water rights trading program in areas where in-stream flow is needed and identified as a priority. Water that is being drawn from in-stream could be exchanged with reclaimed water or other source that is reasonably available. Work with watermaster to ensure rights are being enforced.	Lack of flow is a critical limiting factor for water quality and aquatic species in the streams. Exchanging in-stream irrigation water with reuse or other source, would allow more flow to remain in-stream.	**District** Watermaster Oregon Water Trust Landowners	**5,8,9**
6.7	Cost share the expense of obtaining the independent Forest Stewardship Council certification with interested streamside woodlot owners in priority watersheds.	Sustainable forestry practices can protect streamside buffers from logging and offer an alternative for those not willing to participate in a management / stewardship agreement or grant a preservation easement.	**District** Department of Forestry Forest Stewardship Council Landowner	**4,5,8**
6.8	Work with Metro to implement a regional water quality impact tax on pesticides and inorganic/chemical fertilizers; use the revenue to fund public awareness campaigns and promote non-toxic alternatives.	Pesticides and fertilizers are nonpoint sources of pollution used by the general public. Implementing a regional "polluter" tax on pesticides and fertilizers would shift the cost burden to those who voluntarily choose to pollute rather than to those who choose non-toxic alternatives.	**District** **Metro** **Cities** **County** **State**	**1,3,4** **5,6**

Incentives

Incentives offer positive reinforcement for preferred behaviors and actions. Stakeholder surveys suggest that people would be more motivated to change their behavior if they were offered incentives. The District has begun to develop incentive programs for partners outside the urban growth boundary, cost sharing for redevelopment, and distribution of free trees to private streamside owners. Other incentives include property tax relief, payment for protection easements, water rights exchange, cost shares for sustainable management certification, and access to lower-cost, non-toxic alternatives, as outlined in Table I-1, section 6.0. The incentives, along with public education and awareness, help engage the community in assisting Clean Water Services and local jurisdictions in improving stream health.

Public Education, Awareness and Stewardship

The public values and public behaviors/habits surveys conducted in summer 2002 (see Part II, Chapter 1) revealed that the public is generally unaware of the threats to and current causes of degraded water quality and stream health. More importantly, it was clear that people do not perceive that their day-to-day activities impact water quality. Based on the social survey findings, recent social-based marketing research, and local field observations, a number of refinements could be made to public awareness and education activities/programs to have a greater influence on individual behaviors that affect water quality. Table I-1, section 7.0, outlines specific ideas for program refinement.

Table 1: *Policy and Program Refinements (continued)*

POLICY AND PROGRAM OPTIONS (COMPLETE / UNDERWAY / PROPOSED)		RATIONALE	PARTNERS (Bold = Lead)	INTERRELATED PROGRAMS (SEE KEY)
7.0 Public Education and Awareness				
7.1	Implement a monthly on-line newsletter for the surface water management program. Build an email list that includes key stakeholders and constituents. Post an activities score card on the District web page that reports progress in key indicators such as: number of trees planted, miles of street swept, plans reviewed, etc.	Demonstration of performance and regular prompted SWM awareness is an issue for local officials and other stakeholders. Providing regular newsletters and status updates on performance indicators could improve support and involvement in the SWM program.	**District** Cities	**5**
7.2	Market opportunities to participate in stream enhancement / landscape improvements through other groups such as churches, scouts, ball clubs. Coordinate with Community Tree Planting Challenge (see capital projects).	The public habits survey indicated people are more inclined to participate in environmental activities when they are in conjunction with other groups they already participate with. Community involvement in stream enhancement and tree planting activities increases awareness and stewardship.	District **Non profits** Cities	**4,5**
7.3	Model sustainable behavior (tree planting, non-toxic product use) with streamside owners in neighborhoods with multiple lot to lot impacts. Create temporary stream steward signs to encourage others to conform and create a social norm for streamside management.	Streamside property owners choice of yard maintenance influences stream health. Social marketing suggests that a social norm must be created to facilitate long term behavioral change. Recognition reinforces positive behavior.	**District** Non profits` Cities	**3,4,5**
7.4	Develop point of sale prompts that encourage use of non-toxic garden and roof treatment products to "protect the environment", "keep the water clean". Offer on the spot coupons for less toxic products.	Community based social marketing suggests that message delivery at the point of decision making is more effective than brochures or displays in influencing product choice.	District, Metro Cities, County **Partners for Clean Water** Home and Garden Care Retailers	**1,3,4,5**
7.5	Provide flyers and stickers to local spa and pool suppliers that provide information on proper spa/pool drain water discharge information. Get signed commitments from spa/pool supply stores to remind owners of proper disposal (yard vs. stream). Provide "watershed steward" sticker to the stores for making the effort.	An average of 17% of property owners own a pool or spa; several have been observed draining them to streams and the storm system. Spa and pool water may contain elevated levels of chlorine or other chemicals harmful to aquatic species.	District Metro **Partners for Clean Water** Pool /spa suppliers	**1,3,5**
7.6	Work with local Parks departments to enforce pet waste pickup on public property that provides access within 100 feet of stream. Provide bags and signage at all near-stream locations. Work with Parks to establish heavily vegetated buffers along streams where pet waste is an issue.	Establishing heavily vegetated buffers will reduce the proximity of pet waste to streams. There are an estimated 150,000 pets in Washington County, generating up to 262,000 pounds of waste per day.	District City Parks **THPRD**	**1,3,5**
7.7	Offer coupons for car washing through local car dealers and auto parts stores. Provide information on reducing water quality impacts for those that insist on washing their car by hand.	Community based social marketing suggests that message delivery from an "expert" is more likely to result in behavior change.	**District** Cities Car retailers	**1,3,5**

Table 1: *Policy and Program Refinements (continued)*

	POLICY AND PROGRAM OPTIONS (COMPLETE / UNDERWAY / PROPOSED)	RATIONALE	PARTNERS (Bold = Lead)	INTERRELATED PROGRAMS (SEE KEY)
7.0 Public Education and Awareness (continued)				
7.8	Provide educational programs in Spanish and other languages as appropriate to engage the diverse watershed community.	More than 10 percent of the population in Washington County is Hispanic or Latino. Greater emphasis on educating ethnically diverse populations could help foster watershed stewardship.	District **Partners for Clean Water**	**1,5**
8.0 Monitoring Effectiveness and Implementation Progress				
8.1	Develop a comprehensive monitoring program that includes stream physical attributes and biological monitoring for fish and macroinvertebrates. Complete a subsample re-evaulation of RSAT locations in 2010 and 2020. Continue ambient water quality, flow and temperature monitoring for trending.	Physical and biological monitoring along with water quality monitoring helps the District to guage effectiveness of the overall program of integrated water resources over time.	**District** USGS DEQ	**1,5**
8.2	Evaluate sources of bacteria – determine if pet waste is in fact a significant source of bacteria to surface waters in this watershed.	Pet waste is assumed to be a bacteria source based on studies done in other parts of the country and the loading of waste on daily basis. Local studies are needed to confirm if pet waste as a significant source of bacteria.	**District** USGS DEQ	**1,5**
8.3	Assess nutria, beaver, and waterfowl populations to determine a management strategy. Work with local jurisdictions, Audubon, and Oregon Department of Fish and Wildlife to manage populations when they impact water quality.	Nutria and excessive waterfowl churn up bottom sediments, erode pond banks, defecate in concentrated areas, and excessively graze vegetation which results in degradation of water quality.	**District** County Cities THPRD ODFW	**4,5**
8.4	Establish standardized procedures for site sampling before a project begins and monitoring procedures following the implementation of a project (estimated monitoring timeline: 5-7 years) Establish a database for the information.	Performance measures and monitoring are necessary to gauge success. Standardized protocols will reduce staff time and increase consistency in reporting over time.	**District**	**5**
8.5	Work with Field Operations and Cities to implement a stormwater outfall testing pre and post implementation of intensive street sweeping, line cleaning activities in a few ultra-urban areas.	Effectiveness of alternative, strategic maintenance practices must be monitored to determine if it should be applied throughout the watersheds.	**District** Cities	**1**
8.6	Develop a monitoring program to assess effectiveness of stormwater best management practices and other non-structural activities.	The SWM Framework identified effectiveness monitoring as a key element in assessing performance. The data would be used to support adaptive management per the Stormwater Management Plan.	**District**	**1**

Monitoring Effectiveness and Implementation Progress

Monitoring of watershed conditions is a cornerstone of the District's Integrated Water Resources Management (IWRM) Program. The District monitors various combinations of water quality, flow, fish and macroinvertebrates, and physical stream channel conditions at numerous sites. The continuous and baseline data gathered for the watershed, along with effectiveness monitoring of individual projects, help the District assess the health of the system. Although it is difficult to quantify how effective the individual actions are, the program's overall cumulative impact has proven positive for water quality. Most of the trends for water quality parameters have shown improvement, despite extensive urbanization throughout the 1990s to the present (see Part II, Chapter 3). Table I-1, section 8.0, identifies specific monitoring projects needed to address important questions, as well as general recommendations regarding the monitoring program. The options could be integrated into the comprehensive monitoring program the District is currently developing.

Surface Water Management Funding

Local jurisdictions collect a monthly surface water management (SWM) fee from every equivalent dwelling unit (EDU) in the urban growth boundary to fund operations, maintenance, and limited capital improvements to the storm and surface water system. Development activities are assessed system development charges (SDCs), which are restricted for use on capital projects to improve the capacity of the system that is under capacity as a result of urbanization. Currently, the cities retain 75 percent of the $4.00 SWM fee and retain 100 percent of the SDCs. The District receives the remaining 25 percent of the monthly SWM fee from the cities and retains 100 percent of the SWM fee and SDCs for activities in the unincorporated portions of Washington County and in the cities of Banks, Durham, King City, and North Plains.

The nature of the storm and surface water system requires the program to be regional; water flows through local jurisdictions without regard to institutional boundaries. Table I-1, section 9.0, suggests pooling funds and using intergovernmental agreements (IGAs) to facilitate greater intergovernmental coordination of available funds. A SWM program that assigns funding for projects and programs based on regional watershed-based priorities will generate the greatest environmental benefits and/or offer greater implementation efficiencies.

Table 1: *Policy and Program Refinements (continued)*

POLICY AND PROGRAM OPTIONS (COMPLETE / UNDERWAY / PROPOSED)		RATIONALE	PARTNERS (Bold = Lead)	INTERRELATED PROGRAMS (SEE KEY)
9.0 SWM Funding				
9.1	Consider devoting a percentage of future SWM fee increases to capital projects that provide the most cost effective, environmentally beneficial projects in the watershed. Update criteria for fund use and appropriation.	Pooling fees would provide greater equity, accountability, and effectiveness in implementing projects and programs that benefit water quality, quantity, and aquatic habitat. Such action may allow for further delay in fee increases, if funds were able to be regionally distributed for the most cost effective activities. Eliminates the need to develop project by project cost share agreements through IGA's.	**District Cities**	**13**
9.2	Consider providing some consolidated SWM funds to maintain the hydrology and hydraulic modeling used to develop floodplain mapping. Consider having Washington County Water Resource Engineering section coordinate and maintain the models for all the National Flood Insurance Program (NFIP) jurisdictions and Clean Water Services.	Currently letters of map revision or amendment are processed by the local jurisdictions in a piecemeal fashion. A central repository of information will be needed to facilitate timely and accurate model updates. The County has already made the information available through the web and intends to track any model adjustments in their jurisdiction.	District Cities **County**	**10,13**
9.3	Consider providing some consolidated SWM funds to assist with the implementation of the Community Tree Planting Challenge. The money would be used to fund non-profits that assist with community organizing and project mimplementation. Costs are included in the community tree planting capital project estimates.	With the tree planting program spreading to every jurisdiction, increased staffing will be needed to assist the Basin efforts. Centralizing the funding source reduces administrative efforts for the non profits and improves program efficiencies.	**District** Non-profits	**5,11**
10.0 Capital Project Implementation				
10.1	Utilize in-house District construction staff or City construction staff in coordination with District Staff to implement stream enhancement projects estimated to be under $125,000 to construct and/or a multi-year effort.	The cost per lineal foot of in-house stream enhancement are typically lower than those that utilize contracted labor. When cost effective, use in-house construction staff to implement projects.	**District Cities**	**5,11**
10.2	Explore alternative contracting strategies with qualified stream enhancement contractors in an effort to develop more cost effective projects.	Projects that are design-build in nature can be lower in cost, because less time is spent developing highly refined plans, details, and specifications that inevitably change in the field.	**District**	**5**
10.3	Develop a flexible services contract with local general contractors to address built infrastructure projects such as culvert replacement, stormwater facility retrofits and storm system upgrades	Reducing the bid procedures for small to moderately sized pipe-oriented projects will increase efficiency. Some projects that are currently undertaken by District construction crews could be reassigned to contractors, allowing District construction staff to focus on stream enhancement projects during the July 1-September 30 in-stream construction season.	**District Cities**	**5**

Table 1: *Policy and Program Refinements (continued)*

	POLICY AND PROGRAM OPTIONS (COMPLETE / UNDERWAY / PROPOSED)	RATIONALE	PARTNERS (Bold = Lead)	INTERRELATED PROGRAMS (SEE KEY)
10.0 Capital Project Implementation (continued)				
10.4	Implement an internal engineering and environmental review process of all capital projects prior to permit application and contracting	Quality control on project designs will help to ensure consistency with District policies, project feasibility, and address "red flag" issues for regulators or contractors. Improved review of designs should reduce the likelihood of problems during permitting and implementation.	**District**	**5**
10.5	Secure a regional stream enhancement permit for the District to streamline the permitting process of in-stream and wetland activities.	Projects currently take too long to permit. Improvement to the permitting efficiency is critical to lowering the cost and increasing the implementation rate of projects.	**District** Cities Fed State Regulators	**5,11**
10.6	District negotiate an agreement with the County to assist with the purchase of floodprone habitable structures from willing sellers within the District service area, if purchase is proven to be the most cost effective alternative to a flooding problem. Work with the County to secure predisaster mitigation funds to reduce or eliminate the risk of flooding of structures.	Flood management via regional in-stream detention and channel or floodplain modification has proven difficult to permit, ineffective, and costly. Elevation or removal habitable structures up or out of floodprone areas permenantly remedies the problem. FEMA's position on flood management is to favor flood-proofing, buy-outs, and structure elevation rather than protective berms or stream realignments (FEMA, 2004).	**District** **County** Cities	**5,10,12**
10.7	Develop standardized criteria for use of SWM funds to address structural flooding, similar to conveyance small works. The District, Cities, and County could consider limiting flood management projects to those that address structural flooding or critical access routes. Require an alternatives analysis on all major structural flood management projects to determine expected costs and benefits.	Capital flood management projects (defined to exclude culvert capacity projects) have been implemented to reduce the frequency and severity of flooding yards, homes and structures. A strategic effort to remedy "problem structures" could reduce project and maintenance costs long term.	**District** **County** **Cities**	**5,10,12**

Interrelated Programs Key

1. Stormwater Management Plan
2. NOAA-Fisheries Stormwater Guidance
3. 2000 NPDES MS4 Best Management Practice
4. Goal 5 Planning
5. Surface Water Management
6. ESA Response Best Management Practice
7. Metro Title 3 compliance
8. Agriculture -Forestry Proactices - SPOTAC
9. Reclaimed Water Master Plan
10. National Flood Insurance Program
11. Temperature Management Plan
12. Washington County Hazards Mitigation
13. Intergovernmetal Agreements

Capital Project Implementation

Clean Water Services and local jurisdictions currently implement capital projects with only limited coordination and partnering. Clean Water Services has been the primary agency implementing stream enhancement projects, while the local jurisdictions have focused mostly on operations and maintenance and pipe-oriented projects such as culverts, bridges, and storm system upgrades. The cities' strong engineering expertise has resulted in significant structural infrastructure improvements, but relatively limited stream corridor enhancements, with the exception of some local parks department staff activities. This division of project types appears to be effective. Opportunities exist, however, to increase the cities' implementation capacity through their parks, community involvement, and planning/engineering departments. Table I-1, section 10.0, shows proposed refinements (predominantly internal to the District) to improve efficiency and reduce costs of project implementation.

Criteria for Selecting Annual Projects

The RESTORE model (see Part II, Chapter 4) , the culvert analysis, and watershed priority areas are useful tools for determining the type and location of priority capital improvement projects. However, Clean Water Services' experience is that most projects are opportunistic, driven by funding, timing, and property owner issues. Prioritization criteria were therefore developed to select annual capital projects. The criteria are based on the guiding principles developed by the project committees and Advisory Committee (see Guiding Principles, above).

A project has priority if:

- It benefits water quality and/or aquatic species.
- It connects or will eventually connect to other features or projects.
- It offers project partnering with willing land owners.
- It is self sustaining once established.
- Construction is feasible and affordable.
- Anticipated environmental benefits over time exceed short-term costs.
- It is adequately proportioned to achieve the desired outcome at the lowest cost.

Capital Improvement Program

The District and the local jurisdictions implement capital improvement projects to improve the function, maintain the integrity, and/or increase the capacity of the surface and stormwater systems. Since the establishment of the surface water management program, capital project priorities have been based on local drainage master plans, subbasin-watershed management plans, and flood-related complaints. All jurisdictions implement stormwater facility projects, culvert upgrades, and storm system improvements to be consistent with the plans or to resolve complaints. The District and some cities have also implemented capital and community-based stream enhancement activities consistent with the individual watershed plans. The Healthy Streams Action Plan updates the capital improvement programs of former watershed plans, creates projects for previously unstudied areas, and establishes more integrated, adaptable, and regionally based capital project priorities for the urban and semi-urban watersheds of the Tualatin Basin.

The Healthy Streams Action Plan recommends a capital improvement program that focuses on the green infrastructure (streams, wetlands, floodplains, and upland buffers) and the stream-related conveyance system (culverts, bridges, and directly connected stormwater outfalls). Local drainage master plans and system maintenance records should continue to be used to guide improvements associated with storm pipes and upland storm drainage systems that are not directly stream-related.

The 20-year capital improvement program was developed by using the watershed and stream data, analysis, and models (see Part II) and the guiding principles developed by stakeholders. Annual project selection criteria (see sidebar) were developed to allow the District and local jurisdictions to be flexible, practical and efficient in integrating the surface water management program with other activities, such as transportation improvements, parks development, mitigation projects, and friends-group plantings. Such opportunities may change the timing or costs of projects, but the priorities should remain consistent in location and scope. The proposed actions and estimated costs are firm for only the first 10 years (to 2015) of the program. The recommended projects are diverse in character, size, and scope and are widely distributed throughout the basin; this will allow the capital program to easily accommodate 10 to 20 years of changing watershed conditions. This diversity and flexibility should increase the environmental benefits of the surface water management capital program and be cost effective.

The capital improvement program for the Healthy Streams Plan includes projects for:

Stream preservation and enhancement page 26

Flow restoration page 28

Community tree planting page 30

Stormwater outfalls page 32

Culverts page 34

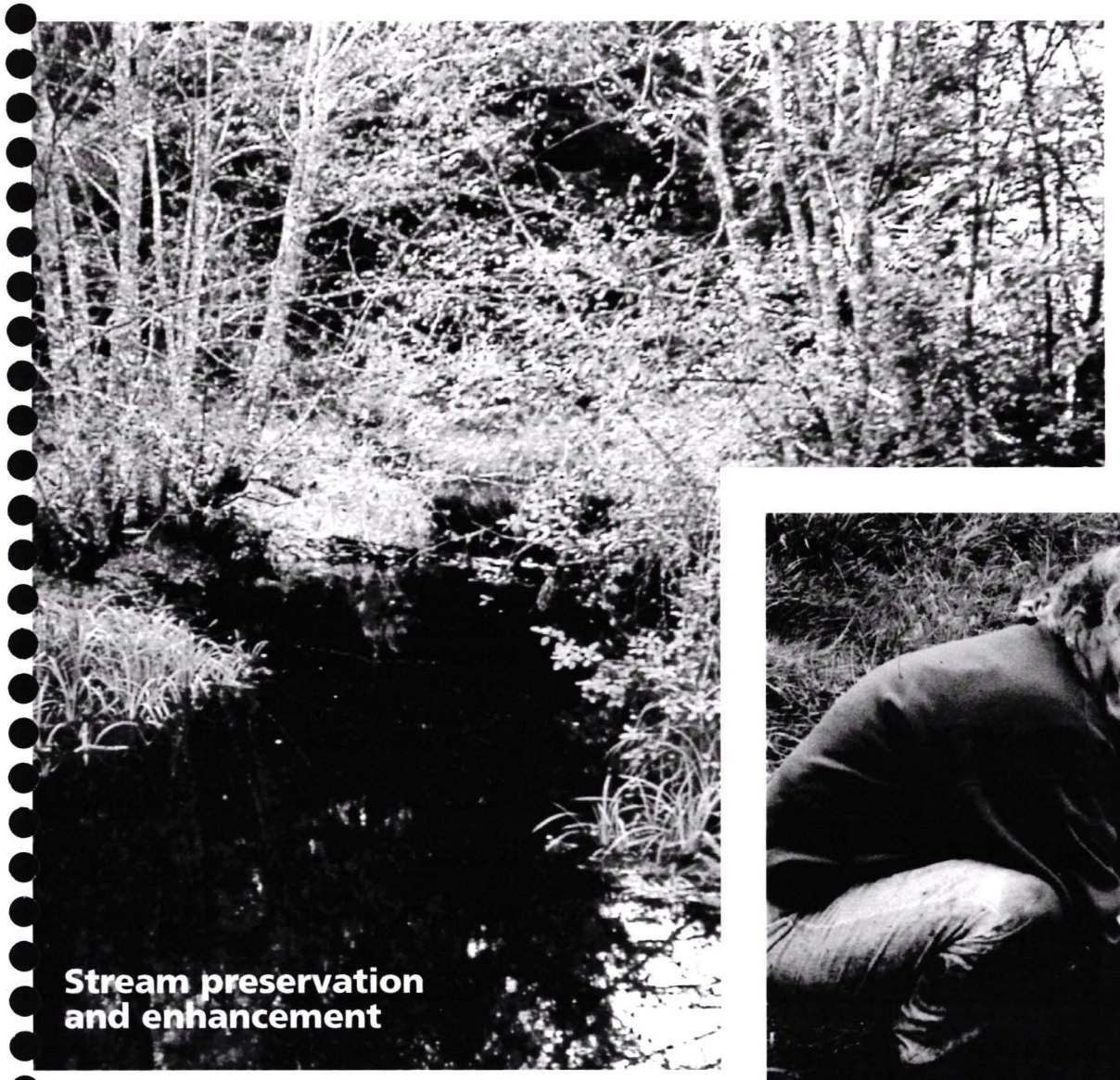

Stream preservation and enhancement

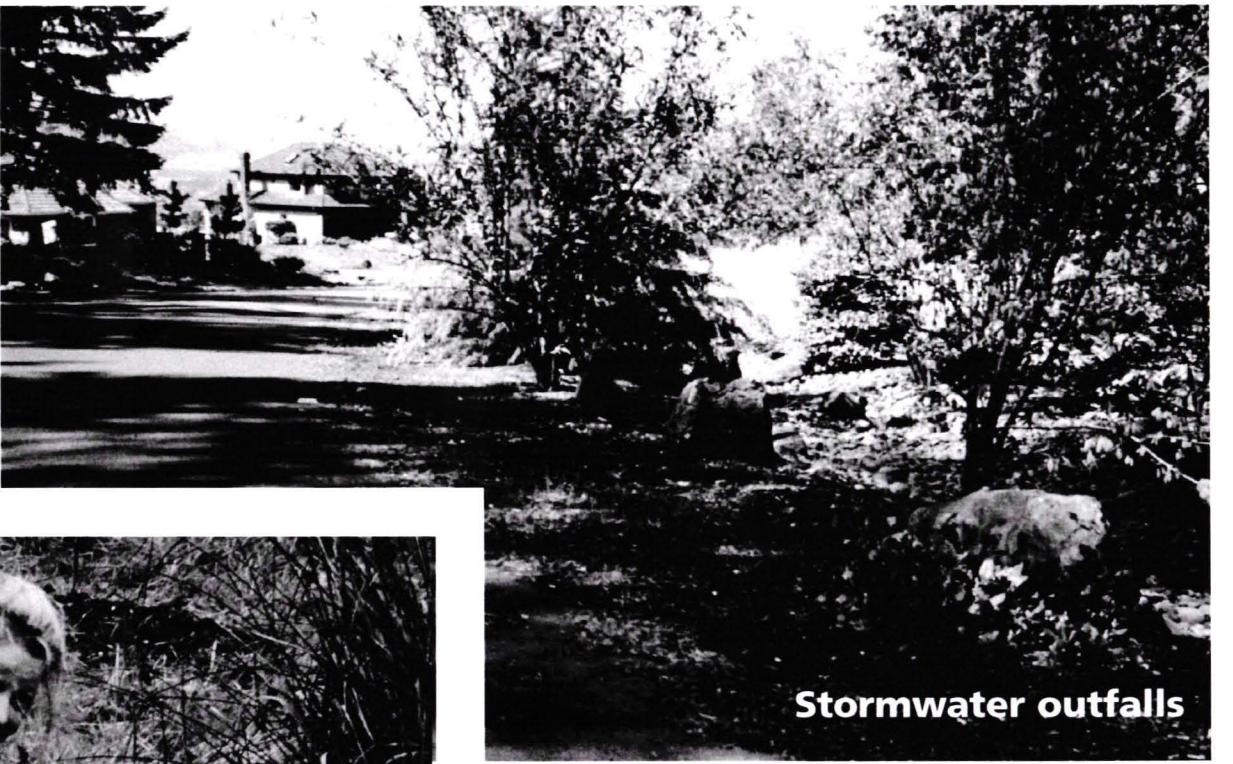

Stormwater outfalls



Community tree planting



Culverts

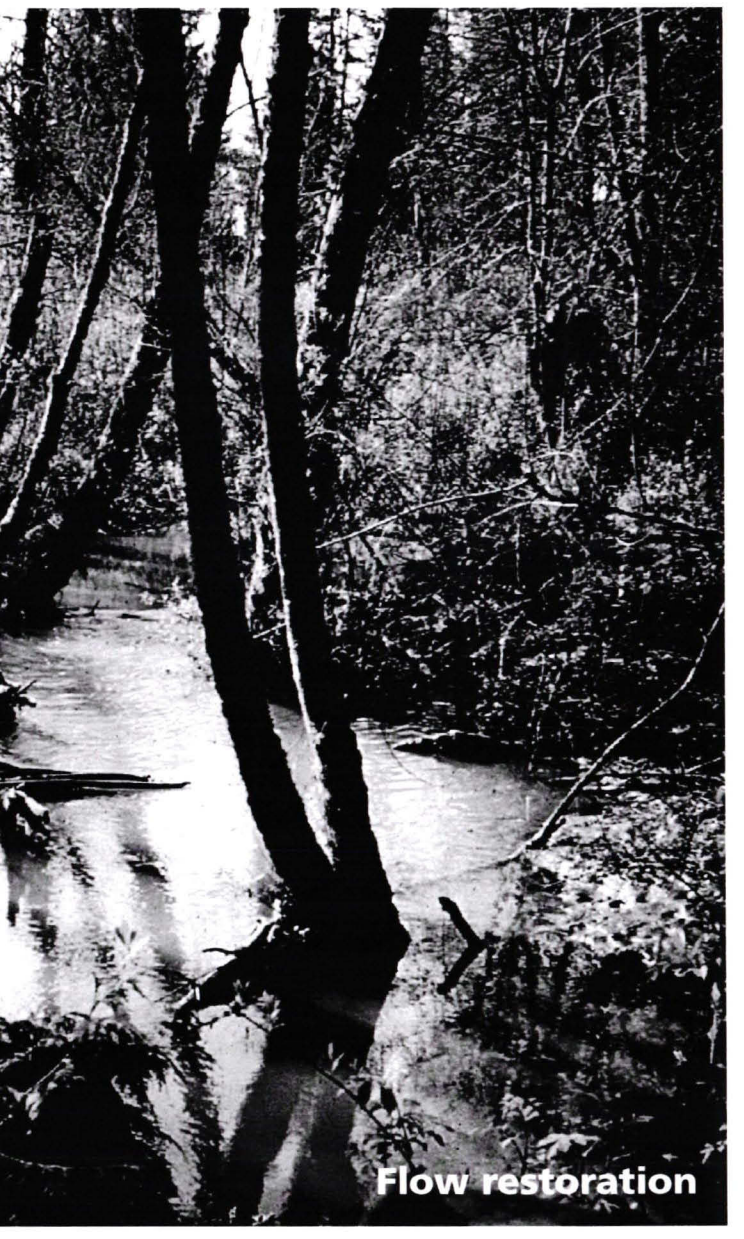

Flow restoration

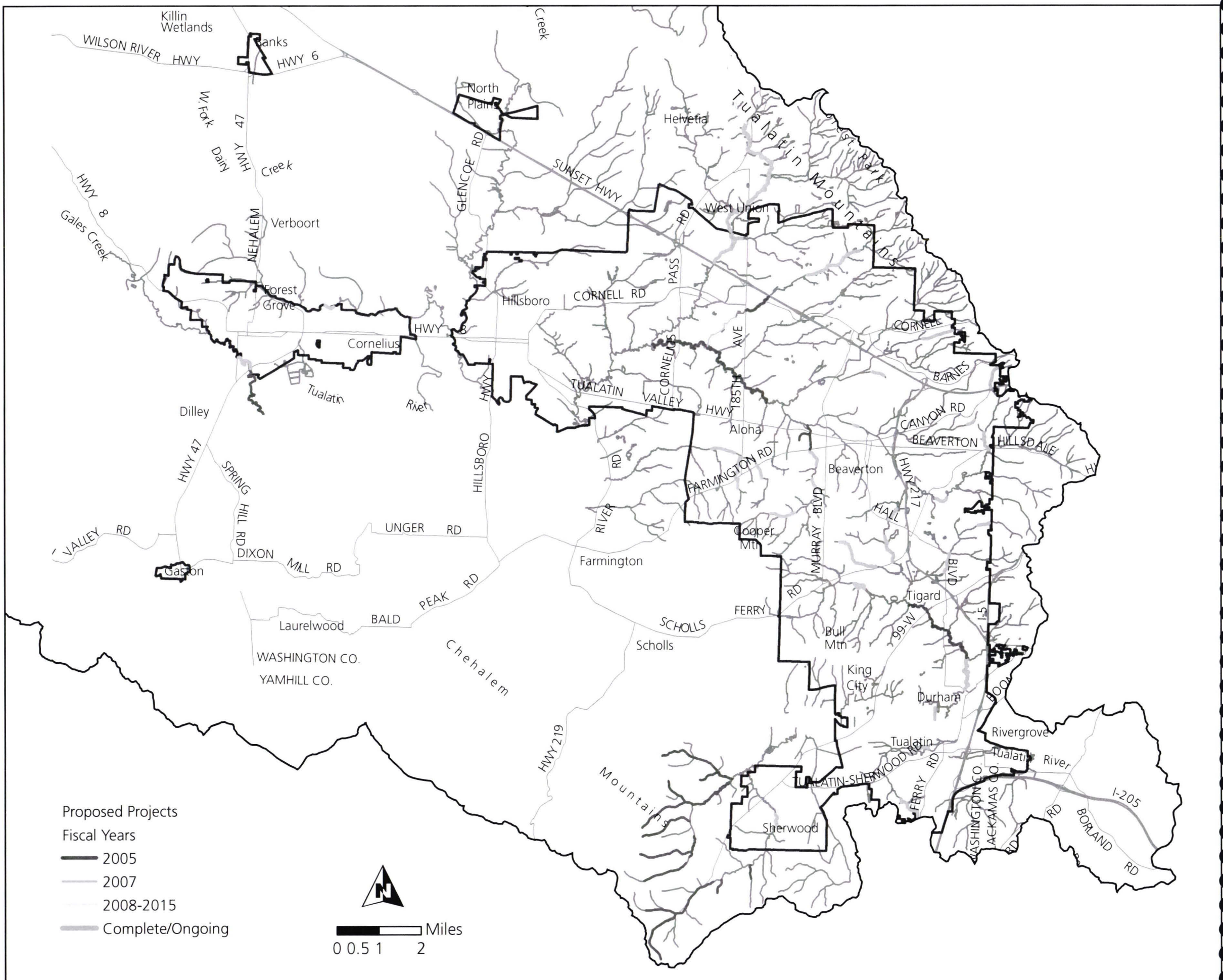

MAP I-1 Stream Preservation and Enhancement

Table 1-2: *District Coordinated Stream Enhancement Activities*

	Creek	Project Location	Enhancement Elements	Miles	Acres	Total Cost	Project Timeline	Partners
	Abbey	Rock Creek confluence to Kaiser Road	Large woody debris, off channel enhancement, revegetation	1.90	21.0	$220,000	2008-2013	Property Owners
	Beaverton	170th to 231st	Revegetation	6.40	38.0	$450,000	2008-2013	Hillsboro, THPRD
*	Beaverton	Murray to 170th	Revegetation, large woody debris	1.50	18.0	$300,000	2005-2012	THPRD, Friends of Beaverton Creek
*	Bronson	West Union to Laidlaw	Revegetation, large woody debris, fish barrier removal, livestock exclusion	2.00	24.0	$345,000	2004-2009	Neighbors
*	Bronson	Tanasbrook Ponds Cornell to 18th	In-stream pond modification, revegetation, fish barrier removal	0.60	15.0	$610,000	2004-2009	County, Beaverton, Neighbors
	Bronson	Mouth to 185th	Revegetation, fish barrier removal, large woody debris	1.50	18.0	$340,000	2007-2012	Neighbors
*	Cedar	Stella Olson Park	Revegetation	0.50	6.0	$93,000	2004-2008	Sherwood
*	Cedar - Chicken	Headwaters	Preservation	5.50	132.0	$350,000	2005-2009	Sherwood, Three Rivers Land Trust
	Fanno	N. Dakota to 99 W	Off channel enhancement, revegetation, large woody debris	1.40	16.0	$300,000	2008-2013	Tigard
	Fanno	Bonita Rd to Durham Rd	Revegetation, off-channel enhancement, bioengineering	1.40	16.0	$525,000	2007-2012	Tigard
*	Fanno	Englewood Park to N Dakota Ave	Revegetation, large woody debris, off channel enhancement	0.50	11.5	$205,000	2003-2008	Tigard
	Fanno	99W to Bonita	Bioengineering, large woody debris, revegetation	2.50	28.0	$550,000	2005-2010	Tigard
*	Gales	Tualatin R. to Hwy 47	Revegetation	1.90	23.0	$140,000	2005-2010	Friends of Fernhill
	Gales	B Street to HWY 47	Revegetation	1.80	20.0	$185,000	2007-2012	Forest Grove
*	Hedges	Pascouzzi Pond	Revegetation	0.25	3.0	$80,000	2003-2006	Tualatin, Wetlands Conservancy
	Johnson South	Bvtn Cr to Farmington Rd.	Channel reconfiguration, revegetation, large woody debris	1.00	23.0	$325,000	2005-2010	St. Marys, SOLV
*	Johnson South	Summercrest Park	Revegetation, large woody debris, fish barrier removal	0.23	3.0	$100,000	2003-2007	THPRD
	Johnson South	Lowami Hart Woods Park	Large woody debris, revegetation, ped bridge replacement	0.25	6.0	$100,000	2006-2011	THPRD
*	Rock	Hwy 26 to West Union	Revegetation, large woody debris, off channel enhancement	1.30	15.0	$395,000	2004-2009	RC Golf Course, THPRD
*	Rock	Evergreen to Cornell	Revegetation, large woody debris, off channel enhancement	0.51	7.0	$165,000	2002-2008	Hillsboro, SOLV
	Rock	West Union to Old Cornelius Pass Rd	Revegetation, large woody debris, livestock exclusion, preservation	5.30	32.0	$450,000	2007-2012	Neighbors
	Rock	Old Cornelius to headwaters	Fish barrier removal, large woody debris, flow augmentation, preservation, revegetation	6.20	37.0	$500,000	2008-2013	Neighbors, Mult Co.
	Summer	Summer Lake 135th to 121st	In-stream pond modification, revegetation, fish barrier removal	0.25	6.0	$270,000	2009-2014	Tigard
*	Willow	Beaverton Confluence	In-stream pond modification, revegetation, fish barrier removal	0.30	3.5	$175,000	2004-2009	Neighbors
			Sub-Totals	**44.99**	**522.0**	**$7,173,000**		
	Future Projects 2010-2025 to Be Determined as part of Adaptive Management. Average cost estimated at approximately 1.25 million per year.					**$18,777,000**		
	Estimated Total Cost of District Coordinated Stream Enhancement Activities to 2025					**$25,950,000**		

* Project underway

Projects that preserve stream health or enhance stream conditions generate ongoing, appreciating benefits to water quality, water quantity, and aquatic habitat. Preservation activities include securing easements or management agreements with willing property owners to ensure the stream corridor remains in a healthy state. Enhancement activities include channel reconfiguration, large wood placement, gravel-boulder placement, off-channel habitat, instream pond removal, and invasive species management/revegetation.

The District used Oregon State University's RESTORE model to identify different preservation and enhancement projects for stream corridors, based on existing conditions. The RESTORE alternatives were then overlaid on priority watershed areas for fish, projects that are underway or completed, and public lands to narrow the project list. Finally, available staffing and surface water management funding were estimated to determine how many and which projects would be implemented each year.

Table I-2 and Map I-1 show Clean Water Services' capital projects list for fiscal years 2004-2015. The list reflects the following broad approaches:

- **High-priority watersheds for fish and water quality are emphasized (Cedar-Chicken, Rock, Bronson, and Gales Creeks).**
- **Preservation is recommended on moderately to highly functioning streams that are at risk of future disturbance. These streams are likely to recover on their own if undisturbed. Preserved streams that are self supporting provide the Tualatin Basin with the greatest amount of free ecosystem services (e.g., shade, flow moderation, habitat) that transport water quality, quantity and aquatic habitat benefits downstream.**
- **Enhancement is proposed in slightly to moderately degraded areas and areas that connect to higher-value resources. Streams that need physical adjustments to repair altered functions are more costly and time consuming than preservation projects. It may take decades to realize the improvements to stream health; if implemented correctly, however, enhancements can offer future generations a self-sustaining and fully functioning green infrastructure.**
- **Complex urban enhancement or "creation" is not recommended over the next 10 years for streams so degraded that ecosystem function is permanently damaged. The costs of these projects outweigh the environmental gains. The initial focus for such areas is stormwater management and tree planting during redevelopment activities.**

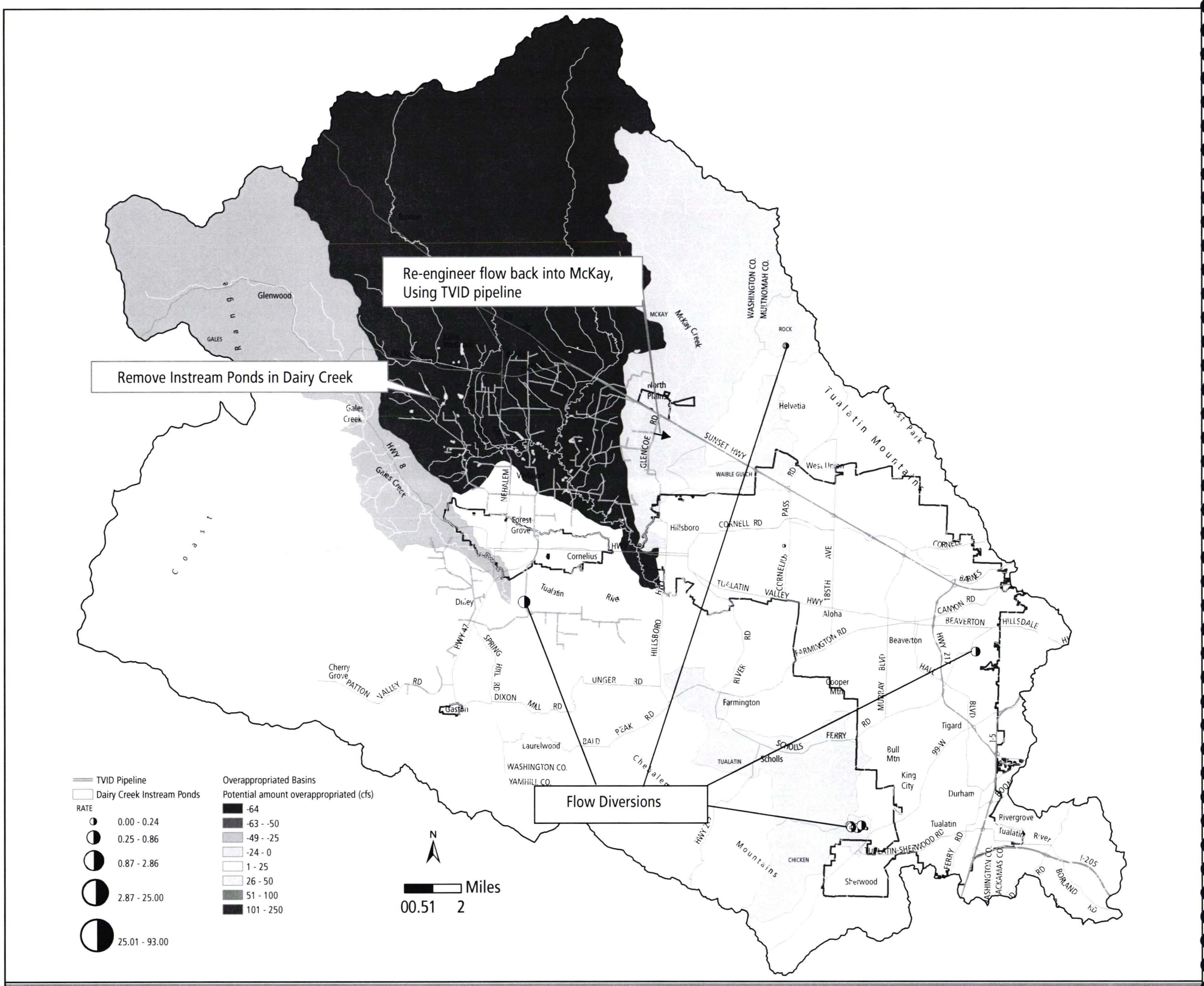

MAP I-2 Flow Restoration

Table 1-3: *Potential Flow Restoration Projects*

Creek	Project Location	Number	Enhancement Elements	cfs potentially restored	Miles of Tribs Down Stream	Total Cost	Project Timeline	Partners
Rock	Orenco Golf Course near Cornelius Pass Road	1 water right	Trade water in return for water left as instream flow/willing seller acquisition	0.02	5	$250,175	2005-2015	Property Owner, Watermaster
Fanno	Fanno Creek Golf Course	1 water right	Trade water in return for water left as instream flow/willing seller acquisition	1.4	12	$532,780	2005-2015	Property Owner, Watermaster
Rock	Rock Creek Dam near Rock Creek Road	2 water right	Dam adjustment/better flow regulation	0.6	17	$473,689	2005-2015	Property Owner, Watermaster
Chicken	Tualatin National Wildlife Refuge	11 water rights	Trade water in return for water left as instream flow/willing seller acquisition	7.71	1	$355,594	2005-2015	TNWR, WaterMaster
McKay	Near Glencoe and Zion Church Road	1 pump	Pump water through TVID system		9	$430,857	2005-2015	TVID
Dairy	Misc. locations (see map)	9 ponds	Reconfigure in-stream ponds	45 acres	13	$606,906	2005-2015	Property Owners
		TOTALS		**57**		**$2,650,000**		

Restoration of stream flows is the most critical of all stream improvements, and one of the most challenging to implement. Flow restoration greatly depends on the available water rights and water usage, landowner cooperation, the water distribution infrastructure, the stream aquatic habitat and water quality needs, and the timing of the flow needs. A detailed analysis of flow restoration opportunities (see Part II, Chapters 3 and 4) suggests that actions will need to be developed on a watershed or subwatershed basis and will likely vary significantly from one area to another. Activities that could increase base flow in local streams include creation or preservation of instream water rights; near-stream irrigation; direct discharge of replacement surface waters; stormwater management that encourages groundwater recharge; and instream structure (large wood) that restores more frequent overbank flooding. Many of the preservation and enhancement projects, as well as the policy and program refinements, include one or more of these flow restoration activities. Table I-3 and Map I-2 identify potential site-specific flow projects in flow deficient watersheds.

It is anticipated that the adjustments to stormwater quantity management, addition of in-stream structure, and revegetation of all small and mid-sized streams, combined with active irrigation, will move some streams toward flow recovery. Water rights negotiations with willing sellers will be an ongoing part of any enhancement project and could be developed further as an active program. The Reclaimed Water Master Plan process is developing alternatives for reclaimed water use that may include water for streams. Alternative distributions of flow restoration waters from Scoggins and Barney Reservoir are also being evaluated. Securing senior water rights for in-stream use and obtaining supplemental water are options for streams where excessive withdrawals cannot be offset by the enhancement of stream or watershed functions.



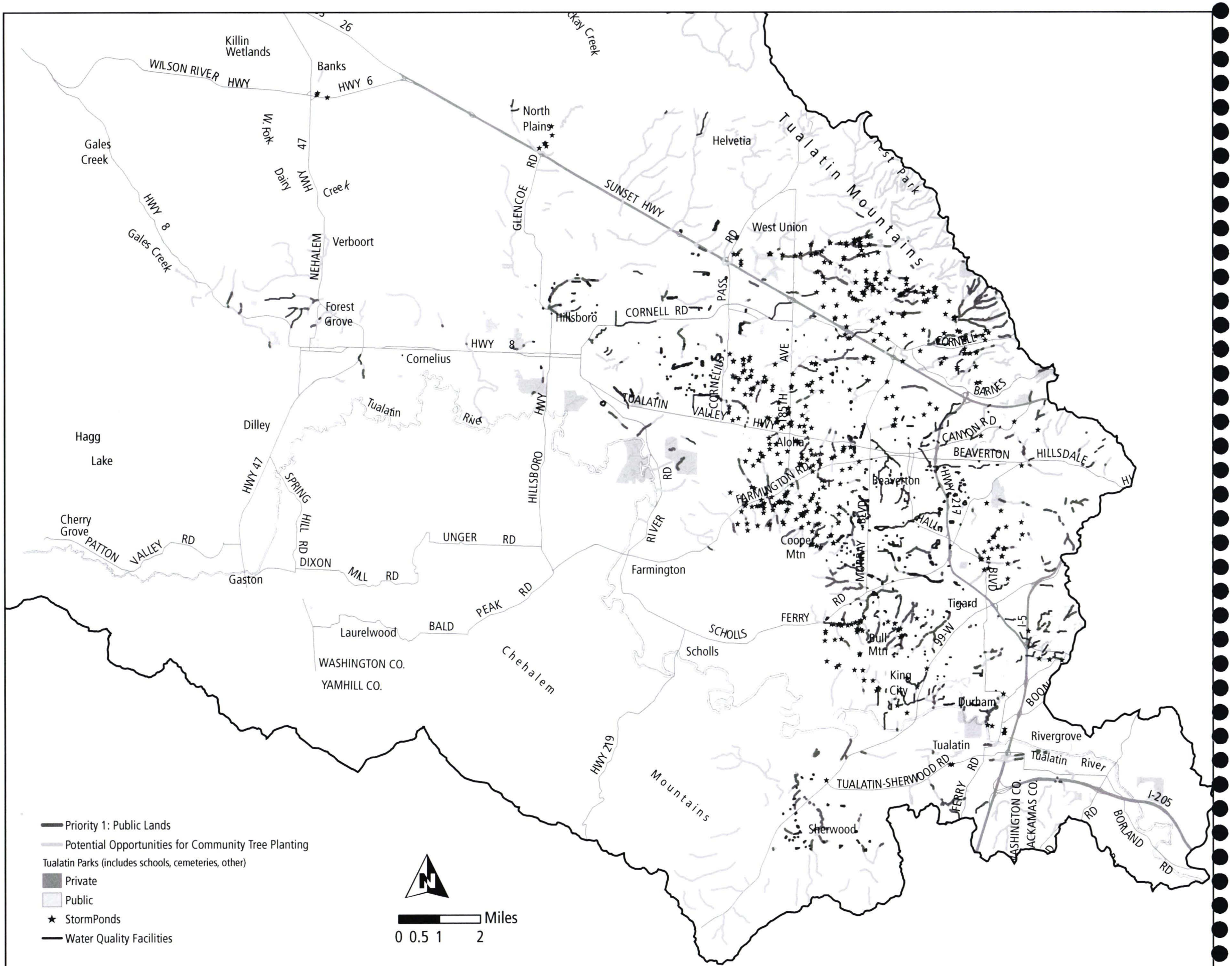

MAP I-3 Community Tree Planting

Table 1-4: *Community Tree Planting Challenge - A Million Trees in 20 Years*

Community	Planting Targets Per Year 2005	2006	2007	2008	2009	2010	2011	2012	2013	2014	2015	2016-2025	Total Tree Target	$20k/ac, $2.5/plant, (2614 plants/ac)
Banks	107	215	322	429	536	644	536	429	322	215	107	429	4,290	$43,548
Beaverton	5926	11852	17777	23703	29629	35555	29629	23703	17777	11852	5926	23703	237,030	$2,406,117
Cornelius	761	1523	2284	3045	3806	4568	3806	3045	2284	1523	761	3045	30,450	$309,101
Durham	105	210	315	420	525	630	525	420	315	210	105	420	4,200	$42,635
Forest Grove	1435	2870	4304	5739	7174	8609	7174	5739	4304	2870	1435	5739	57,390	$582,572
Hillsboro	5951	11901	17852	23802	29753	35703	29753	23802	17852	11901	5951	23802	238,020	$2,416,167
King City	158	315	473	630	788	945	788	630	473	315	158	630	6,300	$63,952
North Plains	123	246	369	492	615	738	615	492	369	246	123	492	4,920	$49,943
Portland (in Basin est)	5250	10500	15750	21000	26250	31500	26250	21000	15750	10500	5250	21000	210,000	$2,131,733
Sherwood	1054	2108	3161	4215	5269	6323	5269	4215	3161	2108	1054	4215	42,150	$427,869
Tigard	3385	6770	10154	13539	16924	20309	16924	13539	10154	6770	3385	13539	135,390	$1,374,359
Tualatin	1859	3719	5578	7437	9296	11156	9296	7437	5578	3719	1859	7437	74,370	$754,938
Clean Water Services*	1012	2025	3037	4049	5061	6074	5061	4049	3037	2025	1012	4049	40,490	$411,018
Community Tree Total	**27,125**	**54,250**	**81,375**	**108,500**	**135,625**	**162,750**	**135,625**	**108,500**	**81,375**	**54,250**	**27,125**	**108,500**	**1,085,000**	
Total Cost Per Year in 2005 dollars		**$275,349**	**$550,698**	**$826,047**	**$1,101,395**	**$1,376,744**	**$1,652,093**	**$1,376,744**	**$1,101,395**	**$826,047**	**$550,698**	**$275,349**	**$1,101,395**	**$11,013,954**

*Clean Water Services will assist cities with their planting efforts and cover full costs for Banks, Durham, King City and North Plains. The District will plant an additional one million trees as part of stream enhancement capital projects.



Native tree and shrub planting can offer dramatic stream health benefits for relatively low cost, particularly on small streams. Planting native vegetation wherever practicable along streams and stormwater facilities will increase stream shade, stabilize streambanks, cycle nutrients, create habitat, provide future sources of woody debris, and clean the air. It also offers opportunities for community building, education, and citizen connections to their local parks and stream corridors. Grassroots involvement can lower the cost of implementation and build support for local water quality programs.

The Community Tree Planting Challenge is a yearly performance target (number of native trees and shrubs planted and alive per year over 3 year monitoring period) based on a gradually increasing proportion of the 2000 population of each city. Table I-4 outlines the annual planting targets for each community from 2005-2025 and provides the estimated total program cost. The ultimate goal is to plant 2 million trees over 20 years, with a majority of the effort being completed by 2015. The planting targets increase gradually each year through 2010, then gradually decline. This approach allows the District and cities to adequately organize, staff, and fund the effort, while facilitating significant implementation in the first six years.

Map I-3 shows the priority areas along small streams; local maintenance staff will need to determine stormwater facility vegetation conditions. Details about program implementation are provided in Appendix B. The general outline of the Community Tree Planting Challenge is to:

- **Plant streams that one could step across (approximately 5 feet wide or narrower) on public lands (parks, greenspaces) and on private lands with willing owners.**
- **Plant public or private water quality and quantity facilities that lack native vegetation.**
- **Use bare-root and 1-gallon native trees and shrubs provided through the District, and plant the densities and composition outlined in the District's standards, as appropriate.**
- **Use contractors or work crews provided through or approved by the District to conduct site preparation and maintenance.**
- **Coordinate neighborhood and community involvement and media for event-based streamside projects on public land. Assist private landowners with technical and material assistance from the District.**
- **Have the District coordinate technical aspects of site preparation, revegetation, and maintenance and monitoring activities.**
- **Have the cities provide financial, community awareness, and pre-event mobilization support. Individual cities may choose to participate in additional project elements as appropriate.**

The Community Tree Planting Challenge will not only increase stream canopy for temperature management and other water quality benefits, but also support community building and stewardship, help local jurisdictions advance state Goal 5 programming, enhance livability, and facilitate stormwater quantity improvements by slowing flow through vegetated areas. Each jurisdiction will be responsible for reporting on the progress of its target at regular meetings. The progress of the challenge will be advertised and shared with the local community.

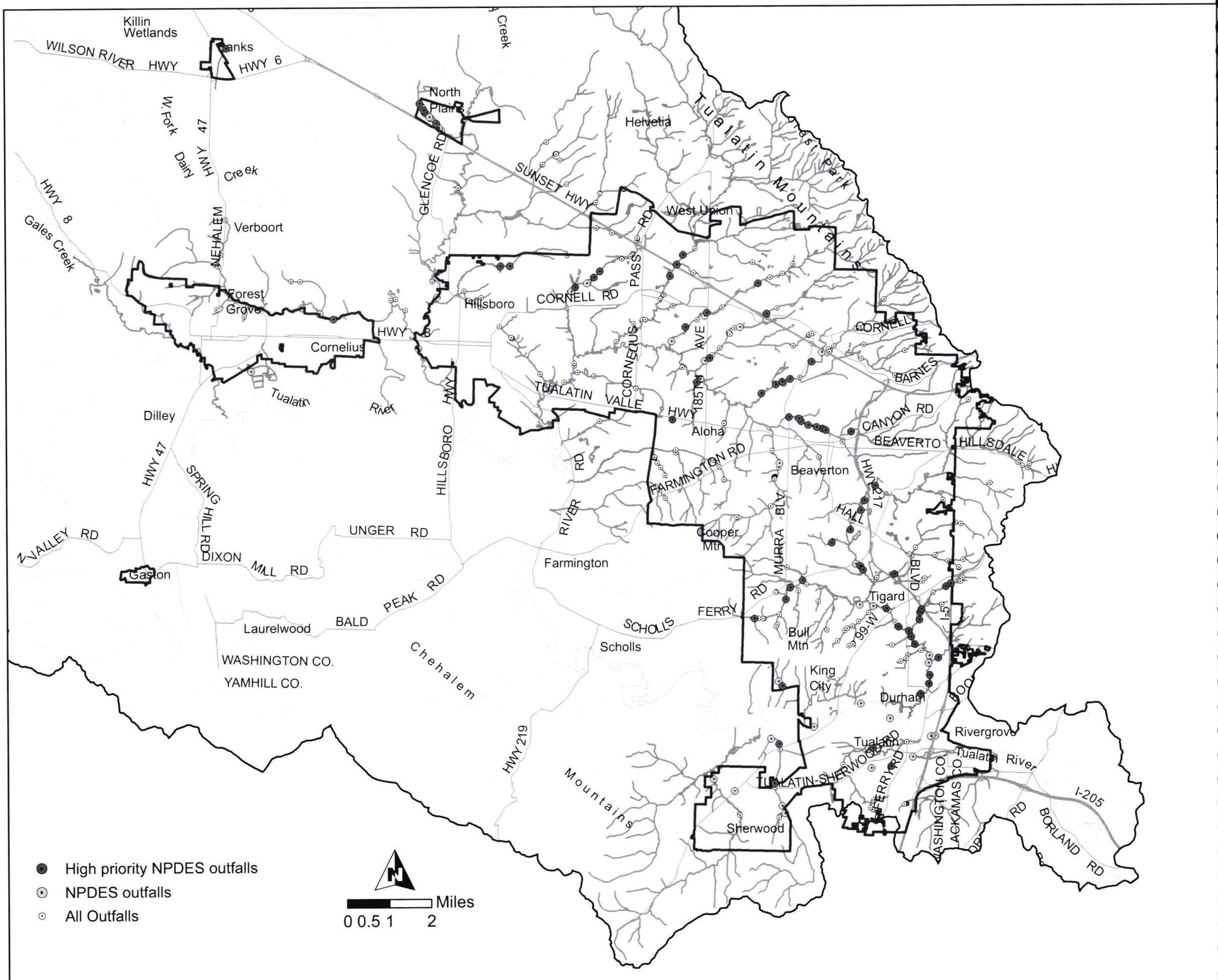

MAP I-4 Stormwater Outfalls

Table 1-5: *Stormwater Outfall Retrofit - Priority Sites with High Pollutant Load Potential*

Community	2005	2006	2007	2008	2009	2010	2011	2012	2013	2014	2015	Total Retrofit Target	Estimated Cost (avg 90k/site)
Banks	0	0	0	0	0	0	0	0	0	0	0	0	$0
Beaverton	1	1	1	1	1	2	2	2	2	1	1	15	$1,350,000
Cornelius	0	1	0	0	0	0	0	0	0	0	0	1	$90,000
Durham	0	0	0	0	0	0	0	0	0	0	0	0	$0
Forest Grove	0	0	0	0	0	0	0	0	0	0	0	0	$0
Hillsboro	1	1	1	1	1	1	1	1	1	0	0	9	$810,000
King City	0	0	0	0	0	0	0	0	0	0	0	0	$0
North Plains	0	1	1	1	1	0	0	0	0	0	0	4	$360,000
Portland* (in Basin)	0	0	0	0	0	0	0	0	0	0	0	0	$0
Sherwood	0	1	0	0	0	0	0	0	0	0	0	1	$90,000
Tigard	1	1	1	1	2	2	2	2	2	1	1	16	$1,440,000
Tualatin	0	1	1	0	0	0	0	0	0	0	0	2	$180,000
Clean Water Services	1	1	1	1	1	2	2	2	1	1	1	14	$1,260,000
ODOT	0	1	1	1	1	1	1	0	0	0	0	6	$540,000
Total Retrofits	4	9	7	6	7	8	8	7	6	3	3	68	
Total Cost Per Year in 2005 Dollars	**$360,000**	**$810,000**	**$630,000**	**$540,000**	**$630,000**	**$720,000**	**$720,000**	**$630,000**	**$540,000**	**$270,000**	**$270,000**		**$6,120,000**

*** Portland has its own NPDES permit and outfall list.**

Stormwater treatment is currently required to reduce the urban pollutants that could be transported to local surface waters. Before 1991, however, stormwater was allowed to directly discharge to streams and wetlands. As part of its 1991 NPDES stormwater outfall inventory, the District identified 106 major outfalls that discharge directly to streams and determined the predominant land use draining to each outfall. The District then used the outfall inventory, local stormwater quality data, effective impervious cover of the outfall subwatersheds, and literature to determine which outfalls have the highest priority for retrofitting or enhanced system maintenance. The District selected 68 pre-1991 outfalls as high-priority capital projects; these outfalls drain commercial, industrial, and high-traffic areas that have a potential high pollutant loading. The Surface Water Management Framework and 2000 Stormwater Management Plan also recommend developing and implementing such projects (USA 2000). Table I-5 outlines yearly performance targets for each jurisdiction to implement end–of-pipe outfall retrofits and/or to sign agreements for enhanced maintenance of areas that drain to the outfalls. The estimated average capital cost per facility or initial system cleanout is $90,000 this means some outfalls may cost more or less depending on site conditions, drainage area etc. Detailed costs estimates should be developed at the time of implementation. Details about each priority outfall are provided in Appendix B. Map I-4 shows the locations of the priority outfalls.

The Healthy Streams Action Plan does not identify local stormwater pipe or drainage ditch systems and corresponding facility upgrades. Local drainage plans and maintenance records establish priorities for local capacity problems. However, hydraulics models should include any downstream effects that local system upgrades may have. Local jurisdictions should inform Clean Water Services or the county when and where changes are made and provide the impact analysis to the surface system and downstream culverts (see Table I-1, section 9.2).

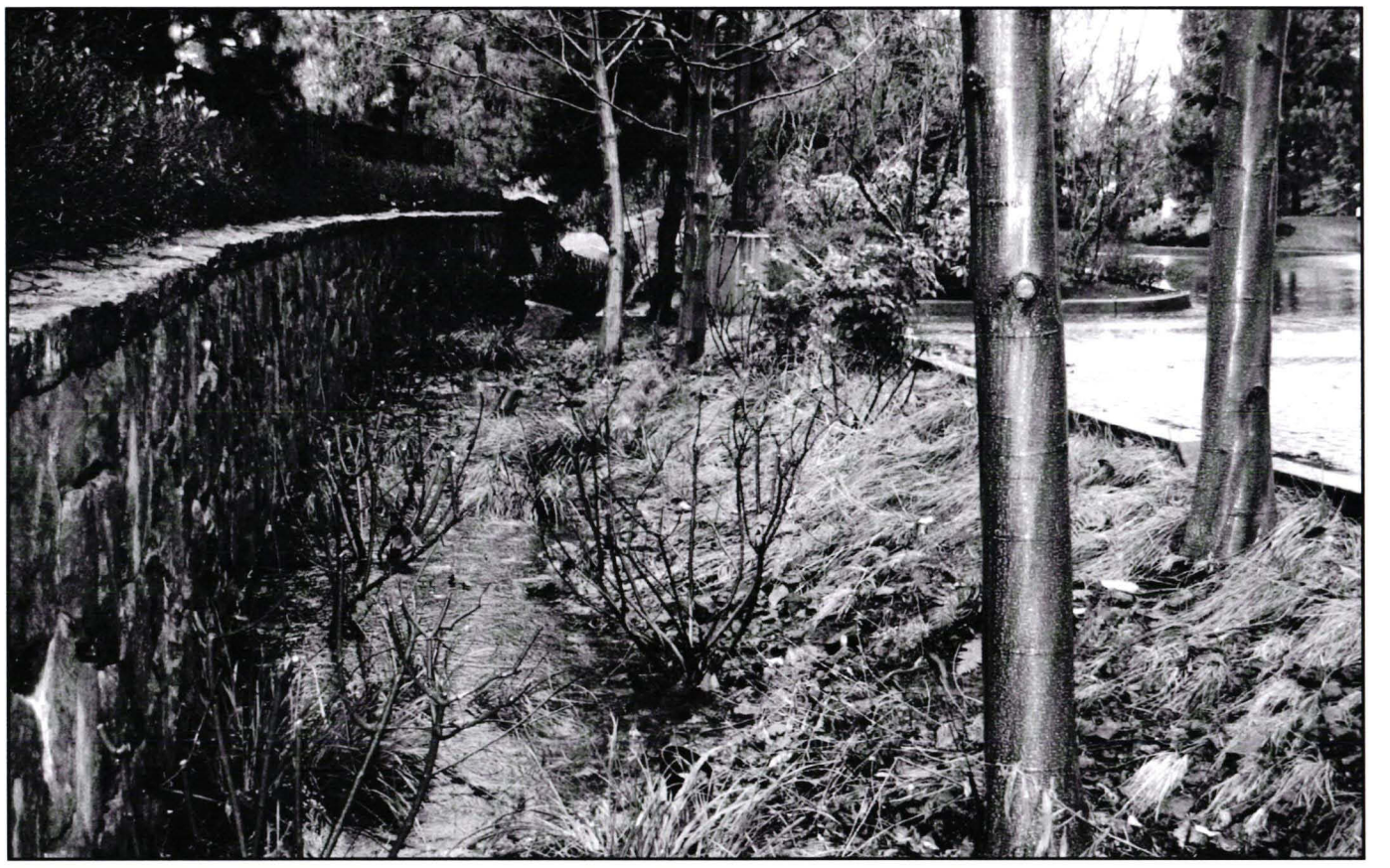

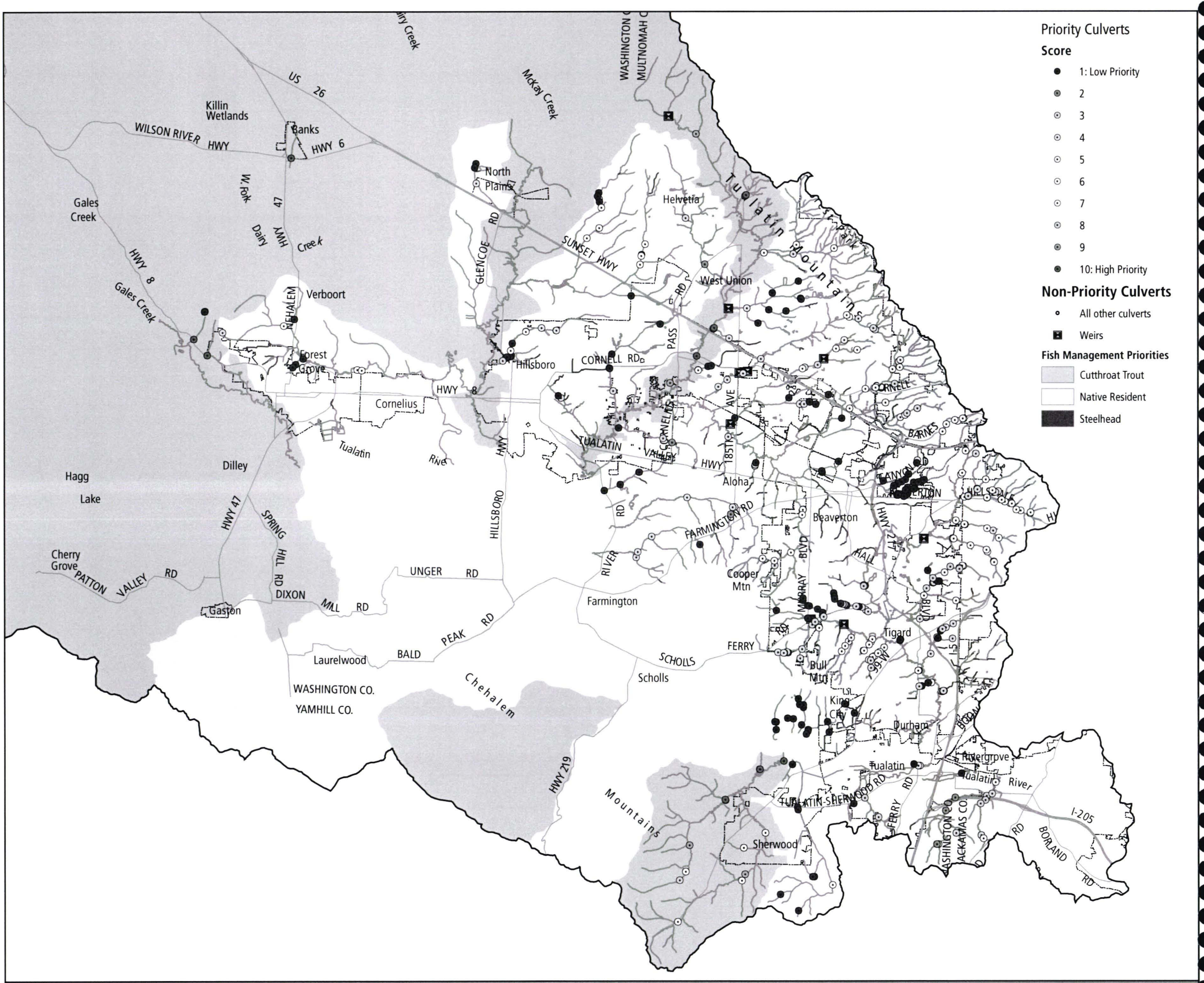

MAP I-5 Culvert Barriers

Table 1-6: *Priority Culverts*

Community	2005	2006	2007	2008	2009	2010	2011	2012	2013	2014	2015	2016-2025	Priority Culverts	Estimated Cost (avg 90k/site)
Banks	0	0	0	0	0	0	0	0	0	0	0	0	0	$0
Beaverton	3	3	3	3	3	3	3	3	3	3	3	14	47	$4,230,000
Cornelius	0	0	0	0	0	0	0	0	0	0	0	0	0	$0
Durham	0	0	0	0	0	0	0	0	0	0	0	0	0	$0
Forest Grove	0	1	0	0	0	0	0	0	0	0	0	0	1	$90,000
Hillsboro	2	2	2	2	3	3	3	3	3	3	3	4	33	$2,970,000
King City	0	0	0	0	0	0	0	0	0	0	0	0	0	$0
North Plains	0	0	0	0	0	0	0	0	0	0	0	0	0	$0
Portland* (in Tualatin Basin)	2	2	2	3	3	3	3	2	2	2	2	13	39	$3,510,000
Sherwood	0	1	1	1	1	0	0	0	0	0	0	0	4	$360,000
Tigard	3	3	3	3	3	3	3	3	3	3	3	16	49	$4,410,000
Tualatin	0	1	1	1	1	1	1	1	1	0	0	0	8	$720,000
Washington Co. / CWS	10	10	10	10	10	10	10	10	10	10	10	92	202	$18,180,000
Total Culverts	**20**	**23**	**22**	**23**	**24**	**23**	**23**	**22**	**22**	**21**	**21**	**139**	**383**	
Total Cost Per Year in 2005 Dollars	**$1,800,000**	**$2,070,000**	**$1,980,000**	**$2,070,000**	**$2,160,000**	**$2,070,000**	**$2,070,000**	**$1,980,000**	**$1,980,000**	**$1,890,000**	**$1,890,000**	**$12,510,000**		**$34,470,000**

Culverts Eligible for SDC's 103

SDC Eligible $9,270,000
SWM / Transportation Funded $25,200,000

See Detailed Priority List and Type of Repair Required in Appendix B. Culvert repair should be funded with a combination of SWM and Transportation fees and system development charges

Culverts and bridges allow surface waters to flow under transportation infrastructure and other built areas. In the urban portions of the Tualatin Basin, most bridges over streams are concrete with semi-natural beds, are adequately sized to convey significant flood flows, and allow for fish passage. Conversely, culverts come in a variety of shapes, sizes, and materials, are often undersized for significant flood flows, frequently alter the geomorphic condition of the stream, and limit fish passage.

The District evaluated 1,043 culverts and bridges in the study area. Of these, 581 culverts were deficient in either conveyance or fish passage or both for some portion of the year. The locations of the deficient culverts were then overlain with transportation plans, priority watershed areas, and the location of proposed stream enhancement projects to determine which culverts were practicable to retrofit, repair, or replace. The District identified 383 priority culverts, which were further prioritized based on the type and severity of the deficiency, the fish species present, and the miles of stream the improvement would open for habitat.

Table I-6 provides the yearly performance targets for each jurisdiction to implement culvert improvements, with an estimated average cost of $90,000 per culvert.

Some culverts will require upsizing, while others may only need channel work up or down stream. Detailed cost estimates should be developed at the time of implementation. Some of the culverts will be repaired and funded by transportation infrastructure projects. If no transportation upgrades are anticipated, culverts that are deficient in conveyance may be funded with system development charges. Culverts that are deficient only in fish passage or have erosion problems may be funded with surface water management fees. Details about each culvert's deficiency type and severity are provided in Appendix B. Map I-5 shows the locations of high-priority culvert improvements.



Table 1-7: *Overall Planning Level Costs*

Capital Projects Community	Task		Costs Per Year in 2005 Dollars 2005	2006	2007	2008	2009	2010	2011	2012	2013	2014	2015	2016-2025	Estimated Total Costs
Banks	Tree Planting	4290	$1,089	$2,177	$3,266	$4,355	$5,444	$6,532	$5,444	$4,355	$3,266	$2,177	$1,089	$4,355	$43,548
	Stormwater Outfalls	0	$0	$0	$0	$0	$0	$0	$0	$0	$0	$0	$0	$0	$0
	Culverts	0	$0	$0	$0	$0	$0	$0	$0	$0	$0	$0	$0	$0	$0
Beaverton	Tree Planting	237030	$60,153	$120,306	$180,459	$240,612	$300,765	$360,918	$300,765	$240,612	$180,459	$120,306	$60,153	$240,612	$2,406,117
	Stormwater Outfalls	15	$90,000	$90,000	$90,000	$90,000	$90,000	$180,000	$180,000	$180,000	$180,000	$90,000	$90,000	$0	$1,350,000
	Culverts	47	$270,000	$270,000	$270,000	$270,000	$270,000	$270,000	$270,000	$270,000	$270,000	$270,000	$270,000	$1,260,000	$4,230,000
Cornelius	Tree Planting	30450	$7,728	$15,455	$23,183	$30,910	$38,638	$46,365	$38,638	$30,910	$23,183	$15,455	$7,728	$30,910	$309,101
	Stormwater Outfalls	1	$0	$90,000	$0	$0	$0	$0	$0	$0	$0	$0	$0	$0	$90,000
	Culverts	0	$0	$0	$0	$0	$0	$0	$0	$0	$0	$0	$0	$0	$0
Durham	Tree Planting	4200	$1,066	$2,132	$3,198	$4,263	$5,329	$6,395	$5,329	$4,263	$3,198	$2,132	$1,066	$4,263	$42,635
	Stormwater Outfalls	0	$0	$0	$0	$0	$0	$0	$0	$0	$0	$0	$0	$0	$0
	Culverts	0	$0	$0	$0	$0	$0	$0	$0	$0	$0	$0	$0	$0	$0
Forest Grove	Tree Planting	57390	$14,564	$29,129	$43,693	$58,257	$72,822	$87,386	$72,822	$58,257	$43,693	$29,129	$14,564	$58,257	$582,572
	Stormwater Outfalls	0	$0	$0	$0	$0	$0	$0	$0	$0	$0	$0	$0	$0	$0
	Culverts	1	$0	$90,000	$0	$0	$0	$0	$0	$0	$0	$0	$0	$0	$90,000
Hillsboro	Tree Planting	238020	$60,404	$120,808	$181,213	$241,617	$302,021	$362,425	$302,021	$241,617	$181,213	$120,808	$60,404	$241,617	$2,416,167
	Stormwater Outfalls	9	$90,000	$90,000	$90,000	$90,000	$90,000	$90,000	$90,000	$90,000	$90,000	$0	$0	$0	$810,000
	Culverts	33	$180,000	$180,000	$180,000	$180,000	$270,000	$270,000	$270,000	$270,000	$270,000	$270,000	$270,000	$360,000	$2,970,000
King City	Tree Planting	6300	$1,599	$3,198	$4,796	$6,395	$7,994	$9,593	$7,994	$6,395	$4,796	$3,198	$1,599	$6,395	$63,952
	Stormwater Outfalls	0	$0	$0	$0	$0	$0	$0	$0	$0	$0	$0	$0	$0	$0
	Culverts	0	$0	$0	$0	$0	$0	$0	$0	$0	$0	$0	$0	$0	$0
North Plains	Tree Planting	4920	$1,249	$2,497	$3,746	$4,994	$6,243	$7,492	$6,243	$4,994	$3,746	$2,497	$1,249	$4,994	$49,943
	Stormwater Outfalls	4	$0	$90,000	$90,000	$90,000	$90,000	$0	$0	$0	$0	$0	$0	$0	$360,000
	Culverts	0	$0	$0	$0	$0	$0	$0	$0	$0	$0	$0	$0	$0	$0
Portland* (in Tualatin Basin)	Tree Planting	210000	$53,293	$106,587	$159,880	$213,173	$266,467	$319,760	$266,467	$213,173	$159,880	$106,587	$53,293	$213,173	$2,131,733
	Stormwater Outfalls	0	$0	$0	$0	$0	$0	$0	$0	$0	$0	$0	$0	$0	$0
	Culverts	39	$180,000	$180,000	$180,000	$270,000	$270,000	$270,000	$270,000	$180,000	$180,000	$180,000	$180,000	$1,170,000	$3,510,000
Sherwood	Tree Planting	42150	$10,697	$21,393	$32,090	$42,787	$53,484	$64,180	$53,484	$42,787	$32,090	$21,393	$10,697	$42,787	$427,869
	Stormwater Outfalls	1	$0	$90,000	$0	$0	$0	$0	$0	$0	$0	$0	$0	$0	$90,000
	Culverts	4	$0	$90,000	$90,000	$90,000	$90,000	$0	$0	$0	$0	$0	$0	$0	$360,000
Tigard	Tree Planting	135390	$34,359	$68,718	$103,077	$137,436	$171,795	$206,154	$171,795	$137,436	$103,077	$68,718	$34,359	$137,436	$1,374,359
	Stormwater Outfalls	16	$90,000	$90,000	$90,000	$90,000	$180,000	$180,000	$180,000	$180,000	$180,000	$90,000	$90,000	$0	$1,440,000
	Culverts	49	$270,000	$270,000	$270,000	$270,000	$270,000	$270,000	$270,000	$270,000	$270,000	$270,000	$270,000	$1,440,000	$4,410,000
Tualatin	Tree Planting	74370	$18,873	$37,747	$56,620	$75,494	$94,367	$113,241	$94,367	$75,494	$56,620	$37,747	$18,873	$75,494	$754,938
	Stormwater Outfalls	2	$0	$90,000	$90,000	$0	$0	$0	$0	$0	$0	$0	$0	$0	$180,000
	Culverts	8	$0	$90,000	$90,000	$90,000	$90,000	$90,000	$90,000	$90,000	$90,000	$0	$0	$0	$720,000
Clean Water Services*	Tree Planting	40490	$10,275	$20,551	$30,826	$41,102	$51,377	$61,653	$51,377	$41,102	$30,826	$20,551	$10,275	$41,102	$411,018
	Stormwater Outfalls	14	$90,000	$90,000	$90,000	$90,000	$90,000	$180,000	$180,000	$180,000	$90,000	$90,000	$90,000	$0	$1,260,000
	Culverts	101	$450,000	$450,000	$450,000	$450,000	$450,000	$450,000	$450,000	$450,000	$450,000	$450,000	$450,000	$4,140,000	$9,090,000
	Stream Enhancement		$1,200,000	$1,200,000	$1,200,000	$1,200,000	$1,200,000	$1,200,000	$1,250,000	$1,250,000	$1,250,000	$1,250,000	$1,250,000	$12,500,000	$25,950,000
	Flow Restoration		$150,000	$250,000	$250,000	$250,000	$250,000	$250,000	$250,000	$250,000	$250,000	$250,000		$0	$2,400,000
ODOT	Stormwater Outfalls	6	$0	$90,000	$90,000	$90,000	$90,000	$90,000	$90,000	$0	$0	$0	$0	$0	$540,000
Washington County	Culverts	101	$450,000	$450,000	$450,000	$450,000	$450,000	$450,000	$450,000	$450,000	$450,000	$450,000	$450,000	$4,140,000	$9,090,000
Total Capital Costs Per Year			**$3,785,349**	**$4,880,698**	**$4,886,047**	**$5,161,395**	**$5,616,744**	**$5,892,093**	**$5,666,744**	**$5,211,395**	**$4,846,047**	**$4,210,698**	**$3,935,349**	**$26,111,395**	**$80,203,954**
Total Policy and Program Refinement Options Costs			**$0**	**$828,000**	**$765,000**	**$715,000**	**$712,000**	**$712,000**	**$712,000**	**$712,000**	**$712,000**	**$712,000**	**$712,000**	**7,120,000**	**$14,412,000**
Total Overall Costs/Year for 20 years (2005 Dollars)			**$3,785,349**	**$5,708,698**	**$5,651,047**	**$5,876,395**	**$6,328,744**	**$6,604,093**	**$6,378,744**	**$5,923,395**	**$5,558,047**	**$4,922,698**	**$4,647,349**	**$33,231,395**	**$94,615,954**

Funding Sources

SDC Eligible Projects	$9,270,000
Transportation Funded Projects	$9,630,000
SWM Fee Funded Capital	$61,053,954
SWM Fee Funded Operating	$14,612,000

Total Resources Needs

Total SWM fee funded elements	$75,665,954
Cost already funded under existing SWM program	$30,083,000
Total additional funds needed for HSP over 20 year program	$45,582,954

Implementation and Monitoring

Implementation of the Healthy Streams Action Plan requires a flexible management approach that can adapt to changes in staffing, funding, partners, policies, regulations, and watershed/stream conditions. A successful plan will consistently ensure:

- **Efficient use of surface water management funds over time**
- **Commitment of local jurisdictions and community members to meet their assigned targets**
- **Monitoring effectiveness**
- **A self-evaluating adaptive management process**

The Healthy Streams Plan is a voluntary water master plan that lists policies and programs, and suggests projects that will further improve the health of our water resources. Approval and implementation of the Plan by the District and local jurisdictions does not obligate them to implement all the actions identified, nor does it change the current funding and obligations of the existing surface water management program. For the Cities, the Plan was designed to encourage steady consistent progress towards performance targets for trees, culverts, and outfalls. Working within the context of existing program activities the Plan brings focus to certain needs, while providing the Cities with the flexibility to determine the timing and scope of projects so that they fit within their existing programs. For the District, projects and programs proposed will also be tracked to show steady progress. Due to various implementation circumstances, project listed may change and policies and programs further refined to meet the overall intent of improving stream health. As projects are scoped, more detailed timelines, cost estimates, and funding will be developed.

Funding

Managing surface and stormwater can be a complex and expensive public program if managers attempt to address all problems, everywhere. The Healthy Streams Plan process was designed to identify and focus on the actions that offer increasing environmental value for the dollar spent. The Action Plan meets federal Clean Water Act and Endangered Species Act goals and supports complementary environmental/land use goals (such as Statewide Planning Goals 5, 6, and 7) by allocating funds to projects and programs that will improve natural resource conditions over time. The Action Plan avoids high-cost, low-benefit projects and applies a graduated scale of expected resource improvements, based on existing watershed conditions.

The estimated overall cost to implement all aspects of the Healthy Streams Action Plan is $95 million over 20 years. Table I-7 shows the planning level costs in 2005 dollars of each major Action Plan element, by jurisdiction. The cost table is based on average conditions for all actions, policies, and programs in 2005; most projects will be more or less expensive depending on site conditions and final project scope. Implementation of the Action Plan is focused on completing over half of the priorities by 2010. Greater effort in the first quarter of the Action Plan timeframe will generate compounding benefits over the remaining 15 years. Activity will gradually level off or even decline as the surface water system is improved and becomes more self-sustaining.

The Action Plan will be funded predominantly by surface water management fees. Some culvert repairs will also eligible to use system development charges and transportation funds. The District and local jurisdictions have approximately $12 million in surface water management fee balances and contingency and $16 million in system development charges as of June 2004. These funds can be used to start the implementation, but a future surface water management fee increase will be necessary to support the Action Plan.

The District and local jurisdictions have spent their funds judiciously and have anticipated that Action Plan implementation will draw upon the reserve funds. As presented in Table II-7, the surface water management program is funded at a modest level relative to similar jurisdictions in the state. The public values survey found over 90 percent of the respondents consistently willing to support a fee increase of $1 to $2 per month. With rising operating costs, yearly inflation, increasingly strict regulatory mandates, and the depletion of reserves to aggressively implement the Action Plan, the buying power of the surface water management fees is declining. A modest rate increase that will hedge against inflationary pressures over time and provide adequate funding to implement the Action Plan is recommended.

Commitment to act

Commitment to implementing the Action Plan is needed at all levels - from mayors and managers to maintenance staff. While Board adoption provides important formal recognition of the Action Plan, staff commitment will determine the Action Plan's long-term success.

Assurances to implement the Action Plan involve commitments by Clean Water Services and the local jurisdictions to provide necessary services and funding. Most of the activities can be implemented without IGA's. Project specific IGA's that involve cost share or other agreements can be developed at the time of implementation. The District is willing to provide training on project implementation as requested by the Cities. Funding and service

guarantees would be required by NOAA (National Oceanic and Atmospheric Administration) if the District and local jurisdictions decide to submit the Healthy Streams Plan as a Habitat Conservation Plan to obtain limited liability status under the Endangered Species Act.

A "SWM Team" is proposed to foster commitment to implementing the Action Plan, as well as other SWM-related activities. The team will include staff members from the local jurisdictions and the District and will meet quarterly to report on the status of their activities. Yearly SWM status reports will be distributed to all city managers, other interested staff, and stakeholders. News media will be engaged to focus attention on implementation successes. Managers will be asked to make the performance targets a priority in their work and the work of their staff. A fundamental awareness and commitment to implementing the Action Plan is needed to create the critical mass necessary to achieve the targets. Consistent and continuous action by dedicated individuals will be crucial to achieving long-term success.

Monitoring

To monitor the Action Plan's effectiveness, baseline conditions must be established. For the Healthy Streams Plan, baseline conditions for the streams' physical attributes were documented in 2000-2001 as part of the planning process. Continuous, long-term monitoring of water quality and flow, and periodic monitoring of biological communities and physical habitat conditions, are also relevant. The District already implements an extensive monitoring program in the Tualatin Basin (see Part II, Chapter 3), and is currently reviewing the program to determine if additional or different monitoring activities will advance the understanding of the system's ecology.

It is important to document changes in water quality, quantity, and habitat conditions over time, as well as to identify the likely causes, so best management practices can be adjusted. Table I-1, section 8.0, identifies monitoring physical and biological attributes of the system and lists project-specific monitoring activities. These options may become part of the comprehensive monitoring program or stand alone as independent short-term projects.

In addition to resource monitoring, action monitoring is also necessary. The District and Cities have databases and GIS systems that will be used for tracking the location, actions, and costs on various project sites. This will be particularly helpful for monitoring tree planting and enhancement actions. Creating an institutional memory regarding activities on various sites improves long term commitment to their success.

To ensure that the surface water management program continues to advance positively, the District will periodically reevaluate the policy and program refinements and capital project implementation, starting in 2010. The SWM Team will be responsible for reporting progress and recommending any adjustments.

Adaptive Management

Adaptive management is the process of planning, implementing, monitoring, and adjusting actions in an effort to meet a desired goal. The SWM Team and status reporting described above will facilitate an adaptive management strategy for the Healthy Streams Plan. Elements of the Plan will inevitably change, but the staff members who implement the Plan will be in a position to readily adapt to changing conditions. Adaptive management will allow Clean Water Services and the local jurisdictions to systematically adjust actions over time as they gain implementation experience and knowledge. This approach will help the watershed community stay on course toward improving watershed and stream health.

PART
2

Part II DATA AND ANALYSIS

Introduction

The Healthy Streams Action Plan was derived from social, economic, and environmental data and analysis gathered over three years. The Action Plan is grounded in the foundation of sustainability, which requires integrating socioeconomic and environmental concerns in a manner that produces a fair and equitable plan for current and future generations.

Part II, Chapters 1-4, summarize the information used to develop the recommendations in Part I (the Action Plan). Additional detailed information and results are available in the Appendices and on the District's website: www.cleanwaterservices.org.



Chapter
2.1

Social Data and Analysis

Sustainable watershed management requires social organizations to understand and appreciate ecological information. Humans are a component of the ecosystem, and watershed managers need to consider how resource management activities affect both socioeconomic and ecological functions. Sustainability begins by building effective human organizations that consider future beneficiaries when making decisions (Lee 1992).

A cornerstone of promoting sustainability is delivering programs that are effective in changing people's behavior (McKenzie-Mohr 1999). Conservation behavior requires at least two conditions: 1) individuals must internalize values, and 2) these values must be articulated in ways that motivate social conformity. Values that do not become institutionalized in the form of ongoing social relationships can have only an ideological status (Lee 1992). Successful institutionalization of behavior occurs when people follow routines and believe that those routines are morally right (Lee 1992). Strategies that promote such institutionalization of behavior (e.g., recycling) involve identifying the barriers to and benefits of sustainable behavior, employing behavior change tools (usually involving direct personal contact), conducting pilot programs, and evaluating the impact once the strategy becomes community-wide (McKenzie-Mohr 1999).

The social information collected for the Healthy Streams Plan considers multiple aspects of human nature, including population trends and demographics, community values, public habits and behaviors, and overall awareness of water resource issues. The data gathered through historic records, advisory committee feedback, telephone surveys, and other relevant research was used to identify opportunities to refine social behavior to benefit surface water quality. Part I: Healthy Streams Action Plan, recommends targeted education and awareness actions to address the findings from these social data.

Population Trends and Demographics

The Tualatin River Basin population has grown substantially since the first census data collected in 1850. By 2000, over 445,342 people lived in the Tualatin River Basin. Metro estimates the population to reach over 700,000 by 2040. Washington County is home to the youngest, most affluent, and most educated residents in Oregon (Impresa 2003; US Census Bureau 2000). While the dominant demographic is the white middle class family, Latino and Asian populations make up almost 18 percent of the total (Figure II-1).

Population dynamics and demographics influence the social and environmental ethics and economic vitality of the watershed community. An ever-increasing population, and an ethnically diverse community with differing cultural values, will pose challenges to Clean Water Services in managing surface waters. Education and awareness programs should be tailored to cultural differences when and where this is critical for protecting and preserving water quality and aquatic habitat.

Streamside property owners are an important stakeholder group on which to focus for surface water management. These stakeholders can potentially have an extremely positive or negative effect on the quality of the riparian corridor and surface water. Based on a public values survey conducted for Clean Water Services in 2002, streamside property owners are generally older (42 percent are 55 or older), better educated, more affluent, and have lived in Washington County longer than the general population (Davis, Hibbitts and McCaig 2002). Sixty-two percent of the streamside owners have college or post-graduate degrees; 61 percent have an annual household income of $50,000 or more; and 50 percent have lived in the county for more than 20

Figure II-1 *Population and Demographics*

Date	Population
1850	2652
1860	2801
1870	4261
1880	7028
1890	11972
1900	14467
1910	21522
1920	26376
1930	30275
1940	39194
1950	61269
1960	92237
1970	157920
1980	245808
1990	311554
2000	445,342
2040	700,000

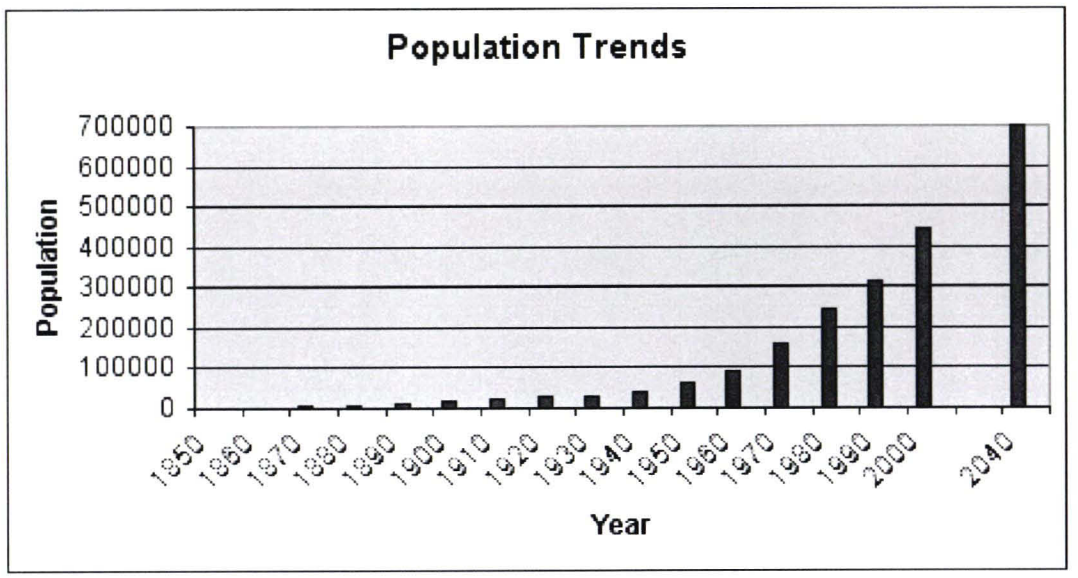

Demographics

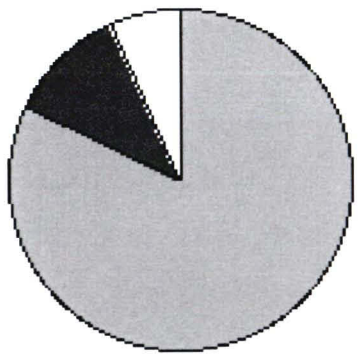

White	82.2
Hispanic/L.	11.2
Asian	6.7



years. Public education strategies and incentive programs geared toward this demographic are likely to be most successful in achieving positive improvements in near-stream conditions.

Community Values

Quality of life, or "livability," is valued by the community and is an economic driver in the Tualatin Basin. The Westside Economic Study (Impresa 2002) showed that the economic growth of Washington County has been driven in large part by the area's quality of life; residents ranked natural beauty, recreational opportunities, and environmental quality as key components of the livability equation. In a May 2001 poll conducted for Metro (2001), however, three in five Washington County residents said their quality of life was getting worse, primarily because of the effects of population growth. Residents cited concerns with increased water and air pollution as a result of growth (87 percent), the impact of growth on fish and wildlife habitat (79 percent), and the added costs of building more water, sewer, and transportation facilities (74 percent). These findings were consistent with the information Clean Water Services gathered during development of its Surface Water Management Framework (USA 2000).

To address these concerns, Clean Water Services gathered specific information about public values in regard to surface water and integrated the findings into the Healthy Streams Plan. The information was gathered through project committees of interested stakeholders, statistically valid telephone surveys, focus group discussions, and research from other recent surveys. The main goal of the social values analysis was to evaluate:

- **Baseline public values and expectations regarding strategies that respond to the Clean Water Act and Endangered Species Act.**
- **Community understanding of impediments to healthy streams, and the public's habits that impact water quality.**
- **Community willingness to pay for resource protection and enhancement.**
- **Community preferences and acceptance of modified policies and regulations.**
- **Community preferences and acceptance of various enhancement techniques.**

The key findings and themes of each community values element are discussed below.

Project and Advisory Committee Values

During the inventory phase of the Healthy Streams Plan in 2000-2001, Clean Water Services convened three regionally distinct project committees, comprising interested local citizens, environmental and business interests, and city and county staff members, to review and consider the scientific information gathered. The committees were asked to identify desired values for streams. Their identified values included:

- **Maintain water quality (filter pollutants and sediment; attain cool water).**
- **Provide fish and wildlife habitat.**
- **Enhance greenspaces.**
- **Ensure drainage and storage for flood management.**
- **Furnish recreation and educational opportunities.**

The project committees also identified guidelines for prioritizing projects (see Part I: Healthy Streams Action Plan).

In 2002, Clean Water Services merged the regional project committees into one Health Streams Plan Advisory Committee that continued with the planning process, but considered the entire study area. The Advisory Committee reviewed and refined the values of the project committees to develop the Healthy Streams Plan vision and mission (see Introduction). Further analysis and understanding of the scientific data helped the advisory committee articulate basic public values in the form of guiding principles (see Part I: Healthy Streams Action Plan).

Public Values Survey

Clean Water Services initiated a public values survey and focus group research in June 2002 to further inform the Healthy Stream Plan process (Davis, Hibbitts and McCaig 2002). This work involved a statistically valid telephone survey of random citizens and streamside property owners in Washington County and was complemented by facilitated focus group discussions with key stakeholder groups. The survey was designed to identify the public values that underlie perceptions and priorities related to the health of the Tualatin River and its streams and to identify strategies to improve stream health. The survey respondents were asked a series of questions designed to articulate their values and determine the intensity of those values, as summarized below. The complete survey is available in Appendix C.

- **When asked to identify what they valued about the Tualatin River and local streams, respondents identified:**
  - **Recreation (24 percent)**
  - **Preservation of nature (23 percent)**
  - **Beauty or scenery (20 percent)**
  - **Water quality (18 percent)**
  - **Wildlife habitat (18 percent)**
  - **Water supply (16 percent)**
  - **Fish habitat (9 percent)**
  - **[Lack of] pollution (5 percent)**

- **When asked a specific range of 12 values related to the Tualatin Basin, both the general public and streamside property owners identified the following four top values:**
  - **Clean rivers and streams (99 percent)**
  - **Healthy streams that support fish (98 percent)**
  - **Clean drinking water (95 percent of general public; 92 percent of streamside property owners)**
  - **Adequate water in streams for fish and wildlife (97 percent)**

- **Between 92 and 97 percent of each group also said the following values were important to them:**
  - **Open space and natural areas for habitat**
  - **Healthy fish populations in local streams**
  - **Existing wetlands protected**
  - **Streamside areas protected from development**
  - **Open space and natural areas for recreation**

Between 79 and 86 percent of both groups identified property rights, property protected from flooding, and increased water supply as important values.

The importance of these values were then further defined. Figure II-2 shows the values, ranked on a scale ranging from very important, to somewhat important, to not very important. The intensity of importance and priority ranking were consistent for both the general public and the streamside property owners with clean rivers and streams and clean drinking water above the 80% mark.

In addition to ranking values, the survey respondents were asked to rank the relative importance of different, sometimes competing, items. A series of 17 randomly paired values was presented, and respondents were asked to choose which of the two in the pair was more important. Figure II-3 show the relative priority of competing values for the general public and streamside property owners. The comparative results validate the rating and ranking findings: the top priorities for both populations are clean rivers and streams and clean drinking water, and the lowest priorities

Figure II-2 *Public Values Regarding Water Resources*

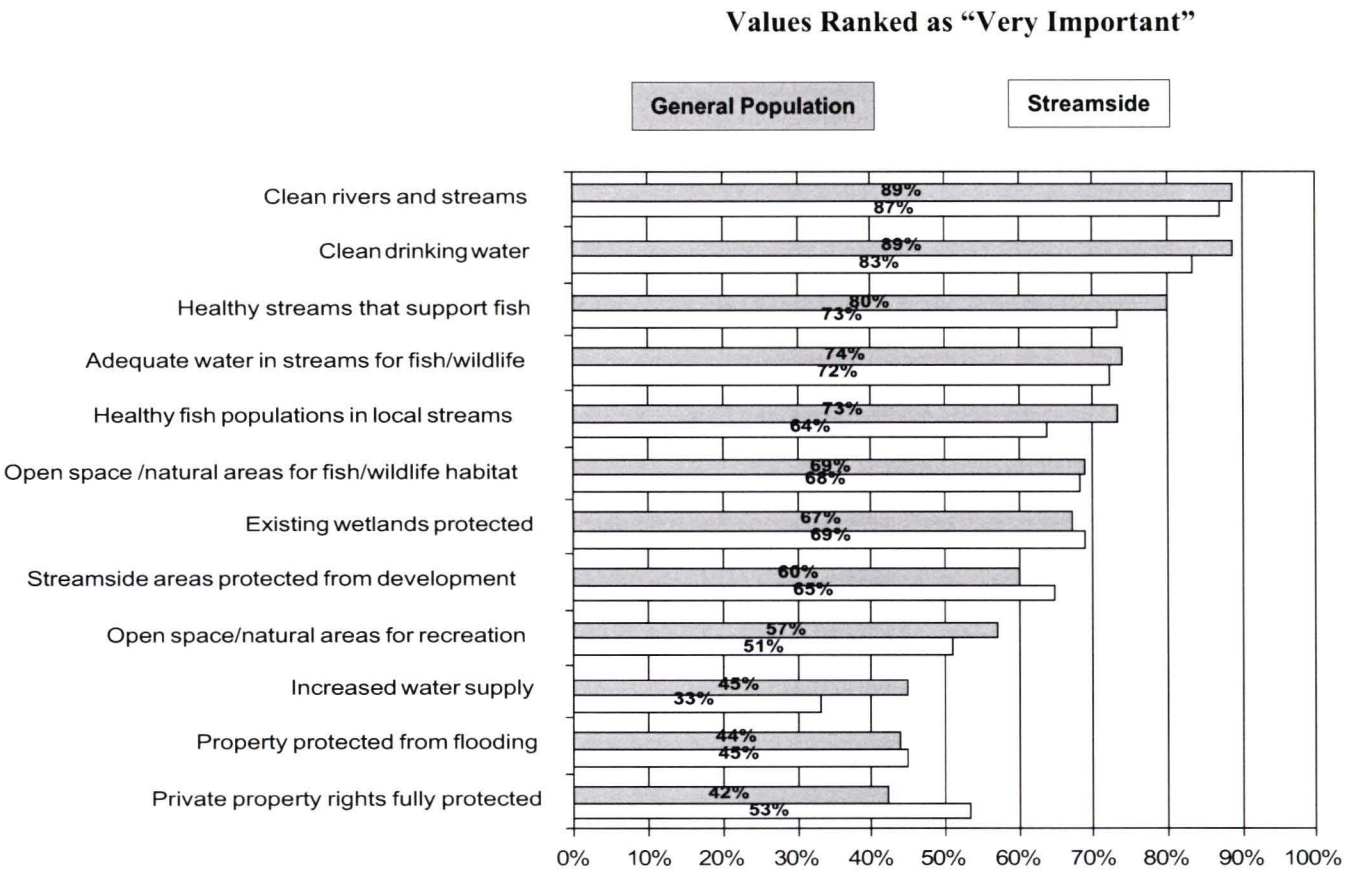

Figure II-3 *Priority of Public Values*

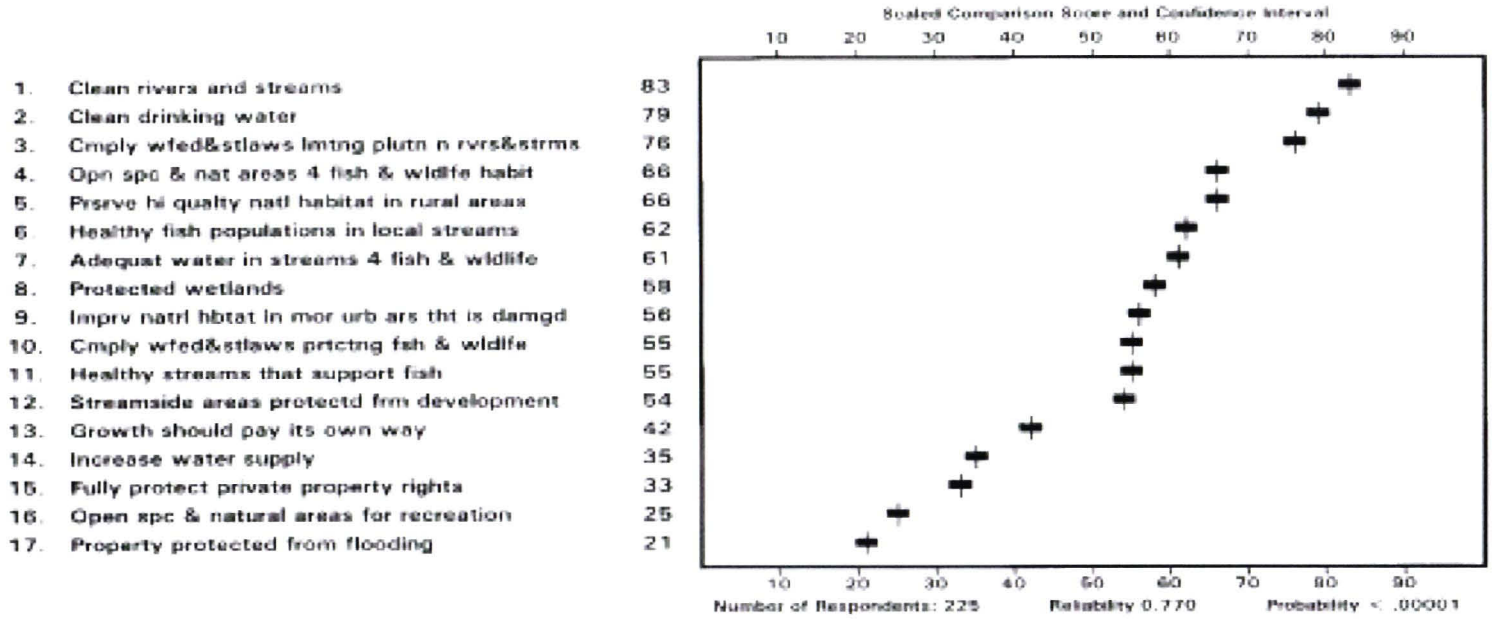

1. Clean rivers and streams 83
2. Clean drinking water 79
3. Cmply wfed&stlaws lmtng plutn n rvrs&strms 76
4. Opn spc & nat areas 4 fish & wildlife habit 66
5. Prserve hi qualty natl habitat in rural areas 66
6. Healthy fish populations in local streams 62
7. Adequat water in streams 4 fish & wildlife 61
8. Protected wetlands 58
9. Imprv natrl hbtat in mor urb ars tht is damgd 56
10. Cmply wfed&stlaws prtctng fsh & wldlfe 55
11. Healthy streams that support fish 55
12. Streamside areas protectd frm development 54
13. Growth should pay its own way 42
14. Increase water supply 35
15. Fully protect private property rights 33
16. Open spc & natural areas for recreation 25
17. Property protected from flooding 21
Scaled Comparison Score and Confidence Interval
10 20 30 40 50 60 70 80 90
Number of Respondents: 225
Reliability 0.770
Probability < .00001

are property protected from flooding and open space for recreation. This information was used to assess which practices and programs should be a priority in the Healthy Streams Plan.

Focus Group Discussions

Three focus groups were also asked to respond to the public values survey: the Home Builders Association, Westside Economic Alliance, and Tualatin Riverkeepers. Participants from the Westside Economic Alliance and Home Builders Association rated fewer of the 12 values as very important; only property rights protection was rated as very important by more than half of the participants in either of these groups. The top public values held by the general public and streamside property owners fell in the middle tier of importance for these participants. Responses from the Tualatin Riverkeepers participants were similar to the values identified by the general public and streamside property owners.

Forestry Survey

In September 2002, the Washington County Small Woodlands Association (WCSWA) conducted a public values/woodland use survey of the 1,880 owners of small woodlots (5 to 5,000 acres) in Washington County. Eighty-five percent of the county's woodlands are less than 50 acres in size, and 70 percent of all woodlot owners live on their land (Nygren 2003). The surveyed owners represent a majority of owners who hold forested near-stream property in headwater areas. Understanding their values helped Clean Water Services assess which strategies and programs are likely to protect critical headwater areas.

According to the survey, the primary reason for ownership of small woodlots is the country lifestyle and aesthetic beauty. Owners of small properties placed a higher value on the aesthetics and rural nature of their property than owners of larger properties and those who have owned their property longer. A secondary reason for ownership was to gain income and investment return; the importance of financial benefits increased with the size of the property and length of ownership. Very few owners of small properties rely on their woodlands as their primary source of income.

The size of property and length of ownership seem to be the most important indicators of whether an owner is likely to engage in active management of the forest. Almost 60 percent of those surveyed did not plan to harvest for forest products, although many identified saw logs, pole and pilings, and firewood as elements of their ongoing management. Owners of larger woodlands plan to harvest more than owners of smaller woodlands.

Strategies to preserve owner values may include assisting with the costs of sustainable forestry certification, managing for old-growth agreements, and paying for lost harvest revenues. Part I: Healthy Streams Action Plan (Table I-1) identifies incentives for land preservation.

Agricultural Values

Clean Water Services' jurisdiction is limited to inside the urban growth boundary. However, the water that flows into the District is influenced by the activities of rural property owners. To support a diverse water resources management strategy, the District began convening agricultural property owners in spring 2002 as part of the Stream Partnership Opportunities Technical Advisory Committee (SPOTAC). The purpose of the SPOTAC is to develop streamside steward incentive programs for property owners. During approximately 15 meetings with agricultural interests, the farm community frequently expressed the following values:

- **Keeping the land in the family for generations to come**
- **Retaining the farmland currently available in the county, and the infrastructure (equipment dealers, trucking companies, feed stores, etc.) that goes along with it**
- **Being able to make a decent living from farming**
- **Being good stewards of the land**

The farm community sees the SPOTAC's programs of Enhanced CREP and VEGBACC as a way to accomplish or support their values. Both programs work with agricultural interests and provide incentives for revegetation along streams.

Public Habits and Behaviors

Clean Water Services completed a survey of public habits in July 2002 to identify people's current behaviors in regard to streams and to determine the motivations behind such behavior (Riley Research Associates 2002). The results were useful for assessing which kinds of education and incentive programs may reduce the water quality impacts of people's daily behavior. Part I: Healthy Streams Action Plan (Table I-1) identifies specific education/awareness actions and incentives. The survey asked streamside and non-streamside property owners the frequencies of seven common behaviors that impact water quality (Table II-1). Because 11 percent of the watershed inside the urban growth boundary is covered by residential development, the behaviors associated with lawn, home, and car care are of particular interest for water quality, and are summarized below. The complete survey is available in Appendix C.

Lawn Care

Fostering sustainable behavior near streams is critical to protecting water quality. Riparian vegetation controls much of the environmental regime of stream ecosystems; it affects light penetration into the riparian area, woody debris, and leaf litter deposition necessary for sustaining stream health. Streams that have diverse native tree-shrub-herbaceous vegetation along their banks function better than those dominated by a single vegetation type, such as grass (Franklin 1992).

The behaviors survey suggests that while a majority (63 percent) of people do not mow or maintain lawn near streams, 33 percent do. Streamside property owners said they maintain lawn primarily because it looks nice and because they believe they should be able to do what they want on their property.

The cumulative impacts of maintaining lawns to the edge of streams are evident throughout the study area, and are limiting the near-stream vegetative cover characteristic of healthy streams. To identify possible strategies for reducing the impacts of near-stream lawns, the behaviors survey asked respondents about various incentive programs. Tax incentives for leaving the riparian area natural were identified most frequently as an incentive for change, followed by education about the benefits of a no-mow zone near streams.

Seventy percent of the property owners use lawn fertilizer and weed-killing or insect control products, with a majority applying the product once to several times per year. When asked why they use chemicals, respondents most often cited ease and effectiveness. The incentives they identified to encourage a change to less-toxic lawn care practices included identification of natural, non-toxic products; education about the benefits of non-toxic products; and reduced prices of less-toxic alternatives.

Table II-1 *Frequency of Water Quality Impacting Behaviors*

Streamside / Random	1x week	1x month	Several x year	1x year	Less often	Never
Mow/maintain lawn within 10 ft of stream	23%	4%	4%	1%	1%	63%
Random (not applicable):	-	-	-	-	-	-
Wash car in street or driveway	10%	16%	22%	9%	2%	41%
Random:	11%	20%	21%	7%	2%	36%
Wash car at drive-thru carwash	6%	32%	27%	8%	3%	23%
Random:	14%	33%	23%	9%	3%	16%
Participate in outdoor volunteer projects	3%	1%	8%	20%	8%	60%
Random:	-	2%	12%	17%	2%	65%
Use lawn fertilizer	1%	5%	28%	28%	4%	31%
Random:	2%	13%	24%	19%	4%	34%
Use weed-killing or insect control products	-	9%	23%	34%	6%	26%
Random:	4%	11%	23%	19%	8%	30%
Treat roof to control moss growth	-	-	1%	19%	17%	62%
Random:	-	1%	-	10%	15%	68%

Figure II-4 *Public Awareness Regarding Water Quality Impacts*

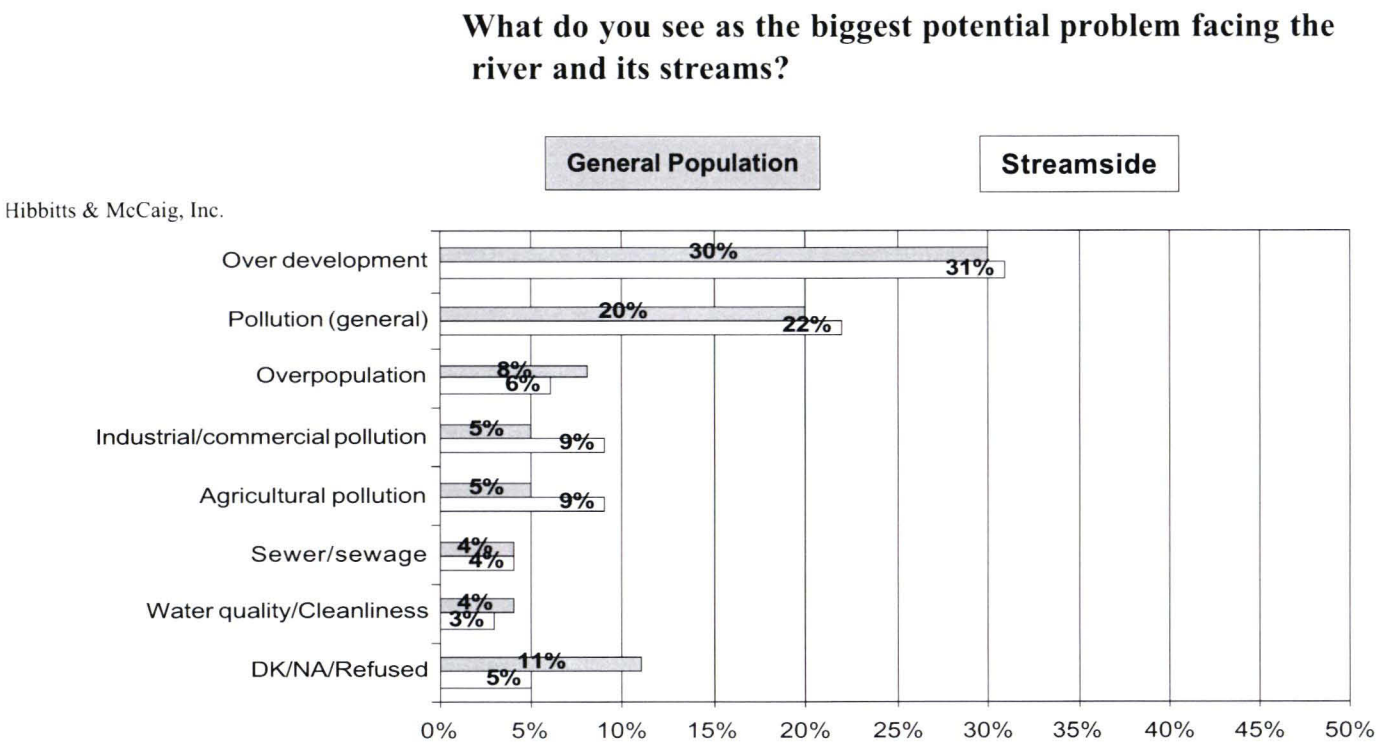

Home and Car Care

Home and car care are difficult to manage because of the high variability in activities and (unlike a lawn) lack of obvious evidence of poor practices. While the survey identified moss control as a relatively infrequent activity, chemical residues coming off a freshly treated roof can potentially harm aquatic species if the roof drains are directly connected to the stream and the volume of treatment washoff relative to the stream flow is high. Clean Water Services staff witnessed this situation during a field visit along Hedges Creek in 1996. At a minimum, downspouts should be disconnected and discharged to landscaping during and after roof treatment until a majority of the residue has washed off. Appropriate and non-toxic methods of controlling moss and downspout disconnection should be encouraged where practicable.

Other discharges to local streams include spa/pool water and car wash runoff. Approximately 14 percent of streamside property owners and 20 percent of non-streamside property owners own a spa or pool. This is significant because chlorinated or partly chlorinated water can potentially be drained to the nearest stream or storm drain. An awareness program would be appropriate to promote land application of spa/pool drain water or discharge to the sanitary system.

Car washing continues to be a highly variable behavior that occurs both at home and at car washes. Significantly, more than half the respondents wash their cars in the street or driveway. While stormwater facilities can capture and treat most car wash runoff in neighborhoods built after 1990, older neighborhoods may not have a facility, and runoff could potentially reach streams untreated. To reduce car wash runoff from these areas, higher awareness (stenciling) and outreach (direct mailers for car washes) may be needed. Many respondents said that discounts or coupons are necessary to encourage use of car washes.

Strategies to reduce lawn, home, and car care impacts could greatly benefit water quality and reduce negative impacts on aquatic species. Strategies that target owners who are likely to be impacting the resource could be more effective and cost less than blanket programs that educate everyone.

OTHER BEHAVIORS

Other behaviors evaluated by the survey included pet waste pick-up, participation in volunteer projects, and water quality improvement activities.

Approximately half of the respondents said it is inconvenient to dispose of or unpleasant to pick up pet waste. The other half expressed their own, often emotionally charged, view that pet owners are lazy and inconsiderate. Monetary fines and free collection devices were cited as incentives to change behavior. The impact of pet waste on watershed bacteria levels needs further evaluation before more aggressive programs to change behavior are implemented. Social peer pressure may ultimately be a more effective mechanism to increase waste removal than encouraging change for the benefit of water quality.

The survey results suggest there is probably only limited opportunity to increase public participation in voluntary stream enhancement activities; this could be done by notifying people of activities and coordinating with other groups they belong to. A majority of the respondents said they do not have time to participate.

A majority of respondents indicated they have made some or no changes to their behaviors to protect water quality in local streams.

Awareness of Surface Water Issues

Clean Water Services used both the public values survey and focus group discussions and the habits survey to determine the level of awareness of surface water issues and to identify where people receive their information.

When asked to identify the biggest problem facing the waterways, 30 percent of the survey respondents identified overdevelopment and 20 percent identified general pollution (Figure II-4). It is notable that respondents did not identify threats to water quality related to personal behavior, including lawn fertilizers, runoff from garden chemicals, and residue from car repair. This disconnect between perception and the reality of how personal behavior affects water resources emerged again when respondents were asked to rank the priority and seriousness of 12 water quality threats. Respondents identified industrial pollution and development too close to streams as the biggest problems facing the river and streams. Runoff from cars washed at home and from pet waste were identified as the lowest concerns (Figure II-5).

The focus groups identified runoff from farm, lawn, and garden chemicals as the biggest threat. Their discussions centered on the disconnect between what people do, what they will pay for, and what they say their environmental values are. They also expressed frustration with the limited knowledge citizens have about the scientific reality of threats to the waterways, and the implications this has for people's positions on land use, development, and population growth. Case studies and surveys show that people do not always act on what they say they value (McKenzie-Mohr 1999). Targeted actions that reinforce positive personal behaviors and create social norms will be needed to adjust behaviors.

Clean Water Services has not evaluated how effectively its programs are promoting sustainable behavior. The public values survey revealed that citizens frequently receive information about local water quality issues from the newspaper, television, newsletters, and billing inserts, and that they support receiving pollution prevention information via such media. Respondents also support money-saving deals for the purchase of environmentally friendly products and favor sponsored community involvement and cleanups. The issue is whether the information and education have produced any behavior changes. According to McKenzie-Mohr (1999), "campaigns that rely solely on providing information, enhancing knowledge, or altering attitudes often have little or no effect upon behavior." The social information gathered during development of the Healthy Streams Plan can be used to develop a strategic program for promoting positive behavioral changes in the watershed community. If Clean Water Services is going to make significant advances in managing nonpoint source water quality impacts from property owners, it must find techniques that change behavior and create a social norm. Part I: Health Streams Action Plan (Table I-1) suggests some public awareness refinements that could influence behavior change. ■

Figure II-5 *Perceived Priority of Behaviors Impacting Water Quality*

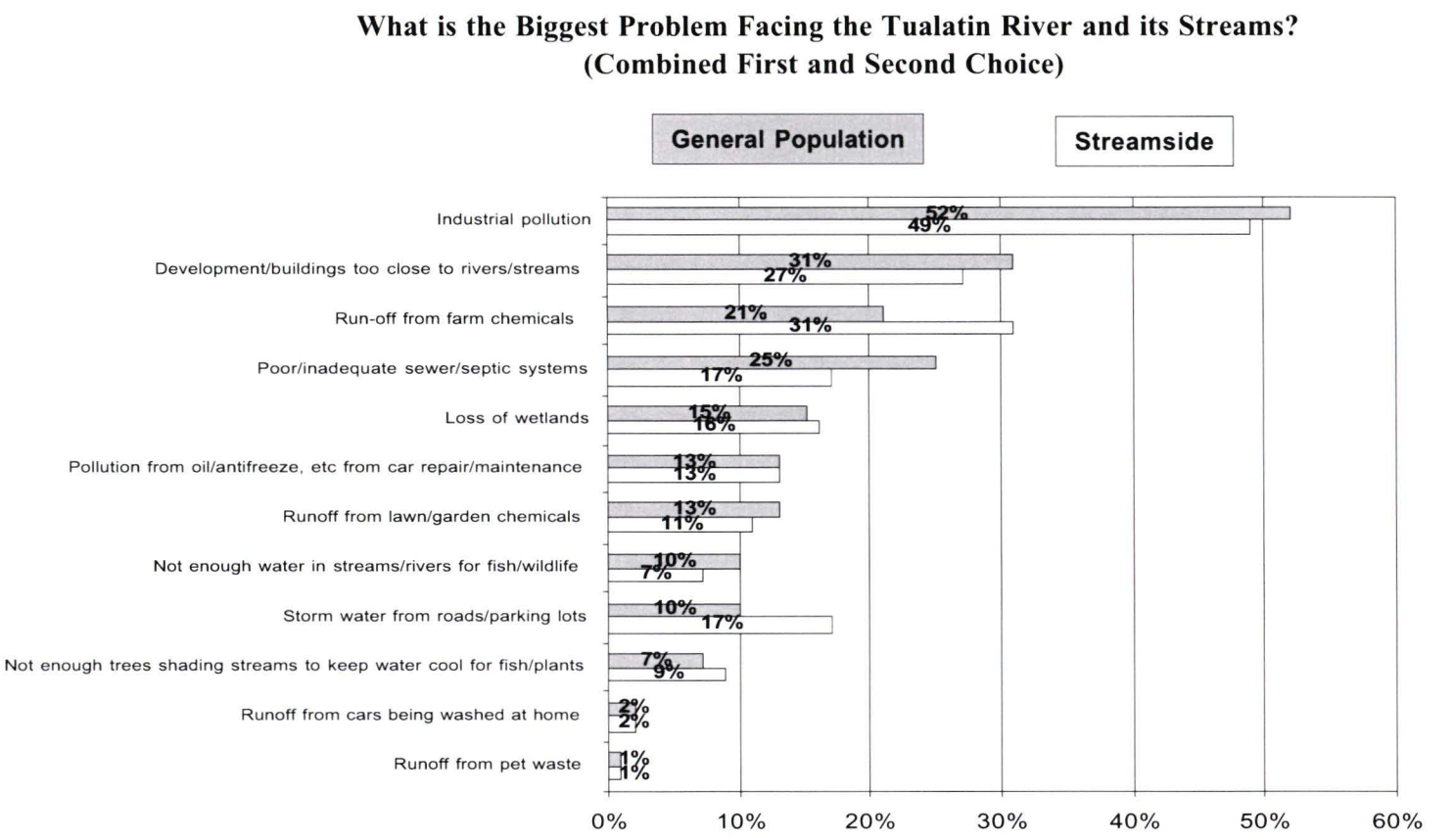

Chapter
2.2

Economic Data and Analysis

Table II-2 ***Historic Surface Water Management Fund Expenditures for CWS***

Fiscal Year	CIP Budget Spent
94	$109,932.00
95	$954,470.00
96	$483,987.00
97	$694,950.00
98	$1,798,639.00
99	$2,183,420.00
00	$1,821,144.00
01	$3,414,544.00
02	$2,209,671.00
03	$3,142,018.00
04*	$2,640,591.00
Total	**$19,453,366.00**

*preliminary

source: CWS CIP budget books

Sustainability is based on meeting the needs of the present, without compromising the ability of future generations to meet their own needs. This means that the evaluation of watershed improvements must consider economic implications, both now and in the future. The economic analysis for the Healthy Streams Plan estimated the costs of proposed watershed improvements, assessed the economic value of protecting and enhancing surface water, and identified financing options to implement the Plan. The economic data and analysis drew from a variety of sources, including a local economic study, previous project costs, and the public values survey (see Chapter 1). The results of the analysis were used to help assess the potential financial impacts of the policy and program options and capital projects in the Healthy Streams Action Plan (see Part I).

Watershed Improvement Costs

Watershed improvements include built capital projects and refinements to policies and programs. Clean Water Services has ample information about the costs of capital improvement projects, but less about costs of policy and program refinements that require internal staff time commitments. Overall, Clean Water Services expended approximately $19.5 million from July 1993 to July 2004 on its surface water management capital program. The District spends approximately $4.7 million annually in operating expenses (based on FY 2001 and 2002 data). About 80 to 85 Clean Water Services staff members are dedicated primarily to surface water management activities. Table II-2 and Figure II-6 show historic surface water management fund expenditures for capital projects. Table II-3 and Figure II-7 show the types of surface water management capital improvement projects that have been implemented between FY 2000 and 2004.

The unit costs for capital projects vary greatly, depending on characteristics such as type of project, site conditions, and labor use. Table II-4 shows the average cost (+/- 30 percent) associated with various capital improvement elements, based upon Clean Water Services' past project costs. As with any capital project, economies of scale reduce overall project costs (the larger the project, the lower per-unit cost). The unit cost estimates assume that implementation of stream enhancement projects will change from the currently used design/contract method to an internal design/build and/or contracted design/build method (see Table I-1, section 10). It is also anticipated that the per-unit cost will decrease over time as the benefits of enhancement are transferred downstream and the system becomes healthy. Part I: Healthy Streams Action Plan provides the proposed cost and timeline for capital projects proposed through 2025.

Non-structural (non-built) activities include regional regulatory changes, operations and maintenance adjustments, inspection and code enforcement, incentive programs, public education and awareness, monitoring, surface water management funding, and project implementation processes. These activities have broad cost ranges and depend heavily on the level of internal efforts, technical assessments, and public involvement needs.

Economic Valuation of Watershed Improvements

Healthy functioning ecosystems provide essential "ecological services," such as water purification, nutrient cycling, temperature moderation, air cleansing, and flood management, which are critical to the sustainability of even the most human-dominated

Figure II-6 *Historic Surface Water Mangment Fund Expenditures of CWS*

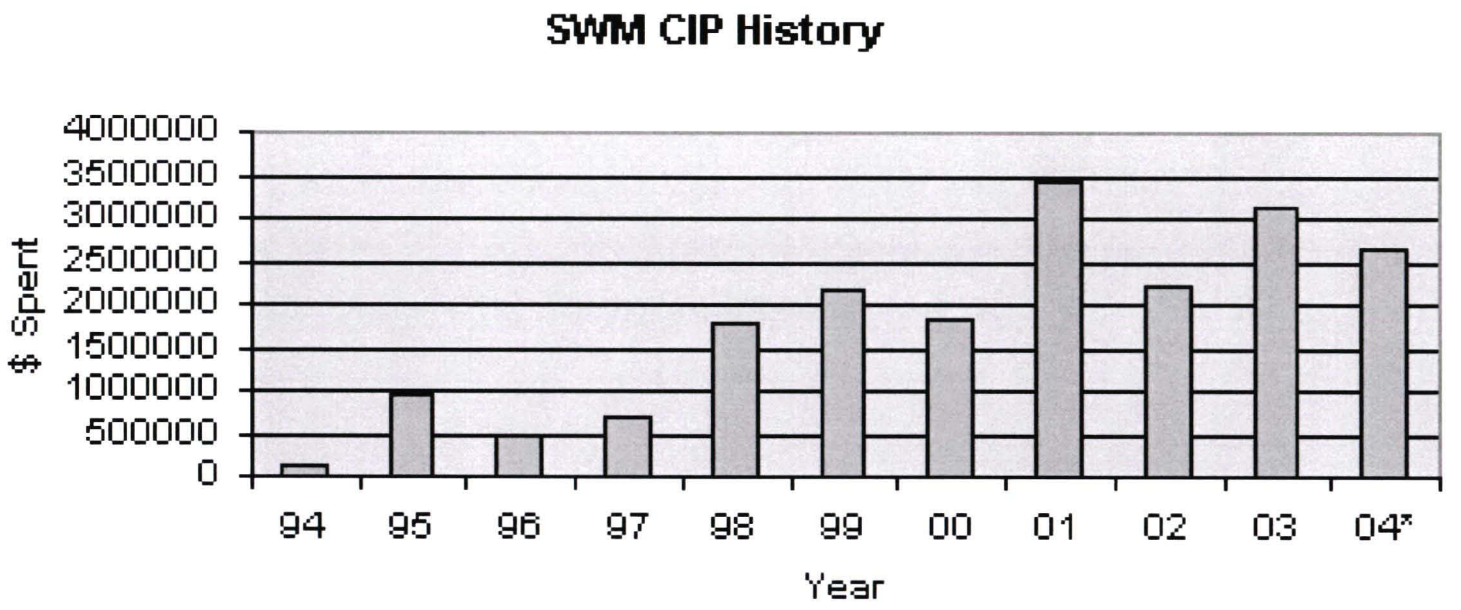

Table II-3 *Surface Water Management Capital Improvement Program 2000-2004 for CWS*

Project Type	2000	2001	2002	2003	2004*	Total	Average
flood management	$185,672.00	$704,706.00	$42,456.00	$38,376.37	$93,135.00	$1,064,345.37	$266,086.34
miscellaneous	$2,943.00	$7,050.00	$21,867.00	$273.33	$548.00	$32,681.33	$8,170.33
monitoring	$21,062.00	$28,368.00	$21,399.00	$164,083.79	$210,176.00	$445,088.79	$111,272.20
planning	$455,833.00	$2,059,257.00	$782,423.00	$739,134.55	$180,601.00	$4,217,248.55	$1,054,312.14
regulatory	$195,145.00	$292,621.00	$156,803.00	$268,818.09	$387,446.00	$1,300,833.09	$325,208.27
stream enhancement	$191,843.00	$480,054.00	$897,125.00	$1,445,943.39	$1,295,427.00	$4,310,392.39	$1,077,598.10
storm system	$256,877.00	$716,601.00	$622,317.00	$461,760.52	$412,912.00	$2,470,467.52	$617,616.88
storm water facilities	$58,499.00	$250,986.00	$44,955.00	$23,628.11	$60,343.00	$438,411.11	$109,602.78
Totals	$1,367,874.00	$4,539,643.00	$2,589,345.00	$3,142,018.15	$2,640,588.00	$14,279,468.15	$3,569,867.04

*preliminary

Figure II-7 *Capital Project Types – FY 2000-2004*

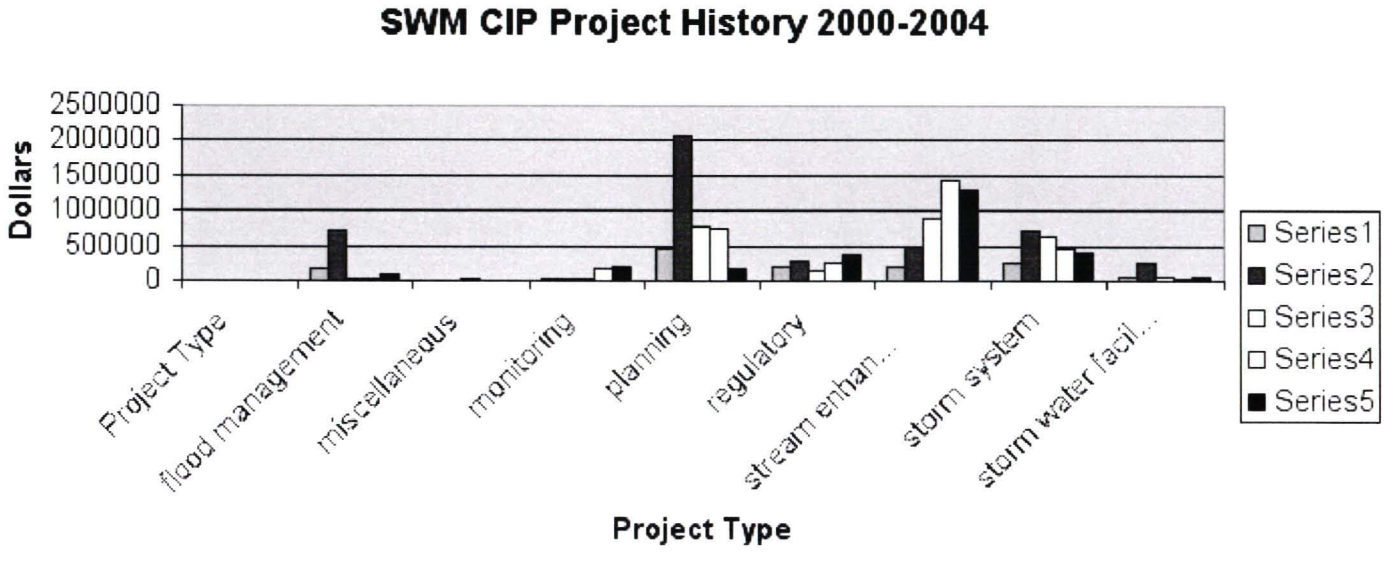

Table II-4

Estimated Average Unit Costs for Capital Improvement Elements

Stream Enhancement Project Elements	Cost Per Mile4 (+/- 30%)
Preservation (200' width/ side of stream)	$245,000.00
Flow Restoration (assumes 12 acres/mile irrigated offset)	$45,000.00
Revegetation (75' width /side of stream, includes 5 yr establishment)	$450,000.00
Large Wood Placement / streambed stabilization	$180,000.00
Channel and Wetland Enhancement1	$250,000.00
In-Stream Pond Adjustments	$880,000.00
Streamside Property Owner Education (10' width/ side of stream)	$150,000.00

Pipe Oriented Projects	Cost Per Facility (+/- 30%)
Stormwater Pretreatment Retrofit (average per facility)2	$90,000.00
Culvert Repair3	$90,000.00

1 Includes channel reconfiguration, bioengineering, gravel and boulder placement, and off channel habitat
2 Identified through 1991-93 NPDES Outfall List. Average cost based on District experience with retrofit projects
3 Identified through culvert analysis. Cost based on average cost of culverts recently repaired by District
4 Based on actual capital project costs from 1998 to 2004, adjusted for inflation and averaged

Table II-5 *Valuation of Ecosystem Functions*

Valuation of Ecosystem Functions

Watershed Function	Resource Valued	Value	Valuation Method	Study Location
Water Quality	wetlands for water quality	$549/acre/year	meta-analysis of 39 studies	U.S.
Water Quality	improve river water quality	$32/household/year	contingent	North Carolina
Water Quality	improve river water quality	$79/household/year	contingent	Massachusetts
Water Quality	improve state water quality for boating, fishing, swimming	$280/household/year	contingent	U.S.
Water Quality	Improve water quality for recreation, existence,, bequest values	$161/household/year	contingent	Colorado
Water Quality	Water quality protection through water management plan	$147/taxpayer/year	contingent	N &S Carolina
Water Quality	Improve surface water quality	$195/household/year	contingent	Ohio
Aquatic Habitat	improve salmon runs	$4/household/month $48/household/year	contingent	Oregon – Portland Metro
Aquatic Habitat	wetlands for recreational fishing	$470/acre/year	meta-analysis of 39 studies	U.S.
Aquatic Habitat	steelhead	$10 for one additional fish caught	contingent	Oregon – John Day
Aquatic Habitat	protection of various fish populations	$60/household/year	contingent	New Mexico
Water Quantity	wetlands for flood management	$518/acre/year	meta-analysis of 39 studies	U.S.
Water Quantity	wetlands for flood management	$300/acre-foot – cost to replace natural flood water storage function	summary of previous studies	U.S.
Water Quantity	wetlands for flood management	$13,926 – change in property value due to restoration of stream that reduced flood risk	hedonic	California
Water Quantity	wetlands for flood management	$905 – damage averted annually per property	property damage averted	Virginia
Wildlife Habitat	threatened/endangered species	$100.28/household/year	contingent	Colorado
Wildlife Habitat	bald eagles	$79.03/person/year	contingent	Wisconsin
Wildlife Habitat	wetlands for wildlife	$403/acre/year	meta-analysis of 39 studies	U.S.
Wildlife Habitat	wetlands for bird watching	$1,597/acre/year	meta-analysis of 39 studies	U.S.
Greenspaces	rivers	$83 per additional foot of river frontage	hedonic	Oregon – Lane County
Greenspaces	riparian greenways	15% increase in home value adjacent to greenway	hedonic	Richmond, BC
Greenspaces	riparian greenways	14% increase in home value if adjacent to greenway	hedonic	Maple Ridge, BC
Greenspaces	greenways	$2,584 – additional value of home when within 1500 feet of greenway	hedonic	Oregon – Portland

used to represent the aggregate benefit of stream enhancement projects (which include wetland floodplains)
Used to determine the average willingess to pay for a SWM program that includes multiple benefits

watersheds (Defenders of Wildlife 1998). Quantifying these ecosystem values or benefits promotes greater balance between social, ecological, and economic goals. Economic analysis is important because it provides a quantitative basis of evaluation that the general public can understand, and because it can ensure an efficient allocation of scarce, commonly owned resources (i.e., surface waters).

Unfortunately, the cost/benefit analysis commonly used in utility analysis falls short when the environmental benefits cannot be fully quantified in dollar terms. In an effort to estimate the economic value of the common environmental benefits (e.g., improved water quality, flood management, fish habitat) gained by improving the functions of the surface water system, the District considered a wide range of valuation approaches and analysis methods.

Valuation Approaches

Over the last 10 years, economists have been refining methods to assign dollar values to watershed resources. It is a challenge to estimate the dollar value because watershed resources are not commodities traded in markets, where the supply and demand dictate a market price. Consequently, economists have developed several methods that use surrogate values, including the following:

- **Substitute Cost or Cost Avoidance:** The value of watershed resources is equal to the avoided cost of engineered alternatives that provide similar watershed functions.
- **Hedonic Value:** A home or other property gains value because it is located near watershed resources.
- **Contingent Valuation:** The public is willing to pay an amount to improve or preserve watershed resources.
- **Benefit Transfer:** The valuation of watershed resources in other locations is transferred locally, using existing valuation studies conducted in the other locations.

These valuation approaches usually focus on a single watershed function, such as water quality, flood management, or recreational opportunities. Watershed resources have a diversity of functions, however. An economic value can be assigned to each function, and the functions can be aggregated to determine an overall resource value.

The District contracted with ECO Northwest to research economic valuation data that could be applied to watershed improvement projects. Several of the economic studies calculated the dollar

Table II-6: *Estimated Range of Benefits of Stream Enhancement Activities*

	Creek	Project Location	Miles	Acres	Total Cost	Total Gross Benefit ($3537/Acre)*20 years[1]	Total Net Benefit	Total Future Value of Net Benefit (4%)	Benefit/Cost Score
	Abbey	Rock Creek confluence to Kaiser Road	1.90	21.00	$220,000	$1,485,540	$1,265,540	$1,539,656	7.0
	Beaverton	170th to 231st	6.40	38.00	$450,000	$2,688,120	$2,238,120	$2,722,897	6.1
*	Beaverton	Murray to 170th	1.50	18.00	$300,000	$1,273,320	$973,320	$1,184,141	3.9
*	Bronson	West Union to Laidlaw	2.00	24.00	$345,000	$1,697,760	$1,352,760	$1,645,768	4.8
*	Bronson	Tanasbrook Ponds Cornell to 185th	0.60	15.00	$610,000	$1,061,100	$451,100	$548,808	0.9
	Bronson	Mouth to 185th	1.50	18.00	$340,000	$1,273,320	$933,320	$1,135,477	3.3
*	Cedar	Stella Olson Park	0.50	6.00	$93,000	$424,440	$331,440	$403,230	4.3
*	Cedar - Chicken	Headwaters - preservation	5.50	132.00	$350,000	$9,337,680	$8,987,680	$10,934,411	31.2
	Fanno	N. Dakota to 99 W	1.40	16.00	$300,000	$1,131,840	$831,840	$1,012,017	3.4
	Fanno	Bonita Rd to Durham Rd	1.40	16.00	$525,000	$1,131,840	$606,840	$738,282	1.4
*	Fanno	Englewood Park to N Dakota Ave	0.50	11.50	$205,000	$813,510	$608,510	$740,313	3.6
	Fanno	99W to Bonita	2.50	28.00	$550,000	$1,980,720	$1,430,720	$1,740,614	3.2
*	Gales	Tualatin R. to Hwy 47	1.90	23.00	$140,000	$1,627,020	$1,487,020	$1,809,109	12.9
	Gales	B Street to HWY 47	1.80	20.00	$185,000	$1,414,800	$1,229,800	$1,496,175	8.1
*	Hedges	Pascouzzi Pond	0.25	3.00	$80,000	$212,220	$132,220	$160,859	2.0
	Johnson South	Bvtn Cr to Farmington Rd.	1.00	23.00	$325,000	$1,627,020	$1,302,020	$1,584,038	4.9
*	Johnson South	Summercrest Park	0.23	3.00	$100,000	$212,220	$112,220	$136,527	1.4
	Johnson South	Lowami Hart Woods Park	0.25	6.00	$100,000	$424,440	$324,440	$394,714	3.9
*	Rock	Hwy 26 to West Union	1.30	15.00	$395,000	$1,061,100	$666,100	$810,377	2.1
*	Rock	Evergreen to Cornell	0.51	7.00	$165,000	$495,180	$330,180	$401,697	2.4
	Rock	West Union to Old Cornelius Pass Rd	5.30	32.00	$450,000	$2,263,680	$1,813,680	$2,206,523	4.9
	Rock	Old Cornelius to headwaters	6.20	37.00	$500,000	$2,617,380	$2,117,380	$2,576,005	5.2
	Summer	Summer Lake 135th to 121st	0.25	6.00	$270,000	$424,440	$154,440	$187,892	0.7
*	Willow	Beaverton Confluence	0.30	3.50	$175,000	$247,590	$72,590	$88,313	0.5
	Total Costs and Est. Benefits of Capital Stream Enhancement		**44.99**	**522.00**	**$7,173,000**	**$36,926,280**	**$29,753,280**	**$36,197,840**	
	Total Cost and Est Benefits of Future Capital Stream Enhancement		130	1300	$18,777,000	$91,962,000	$73,185,000	$89,036,871	$125,234,711
	All small streams					**Net Benefit using capital costs savings over 5 years (2)**	**Net Benefit using annual cost savings over 20 years 3**	**Total Future Value of Net Benefit (4%)**	
	Community Tree Planting Challenge								
	Capital Cost Savings Benefit		34.00	415.00	11,013,954	28,986,046		35,264,424	
	Annual Operating Cost Savings Benefit		34.00	415.00	104,500		27,910,000	33,955,306	
						Total Cost Savings Benefit		**69,219,730**	**69,219,730**
						Capital Enhancement Program Benefits			**$194,454,441**

* Project underway

1) Uses aggregate wetland benefit calculation from Table II-5 of $3537/ac/year
2) Assumes 40 million for chiller built over 5 years
3) Assumes annual operating cost of chiller to be 1.5 million

value of a particular watershed function. The studies were conducted in various parts of the country and used a variety of valuation methods. As expected, dollar values vary significantly among studies because of differences in demographics, study timeframes, and the watershed resources being valued. Table II-5 shows examples of the most relevant research results, with the complete summary provided in Appendix D. The values have been adjusted for inflation through the year 2000. The value of natural resource protection and improvement specific to water quality, quantity and habitat are most relevant for the Healthy Streams Plan.

Estimated Economic Values Using Contingent Valuation and Benefit Transfer

Using contingent valuation (willingness to pay) the value for improved water quality ranged from $32 to $280 per household per year (see Table II-5). For comparison, residents in the Tualatin Basin pay to improve water quality via the surface water management fee of $48 per household per year and an average residential sanitary fee of $320 per household per year (CWS 2004). The value for improving aquatic habitat ranged from $48 to $60 per household per year. Sustaining wildlife habitat ranged from $79 to $100 per household per year. Aggregating the average values for water quality, aquatic habitat and wildlife yields a willingness to pay $293 per household per year for multi-benefit projects and activities.

The value of wetlands (floodplain wetlands, riparian areas, and wet meadow and ponds) was estimated by using multiple analyses from 39 studies across the country. The value of wetlands for their water quality, water quantity (flood), fish, wildlife, and recreational/bird viewing benefits ranged from $403 to $1,597 per acre per year, with a total aggregate value of $3,537 per acre per year.

Figure II-8 *Public Preferences for Funding*

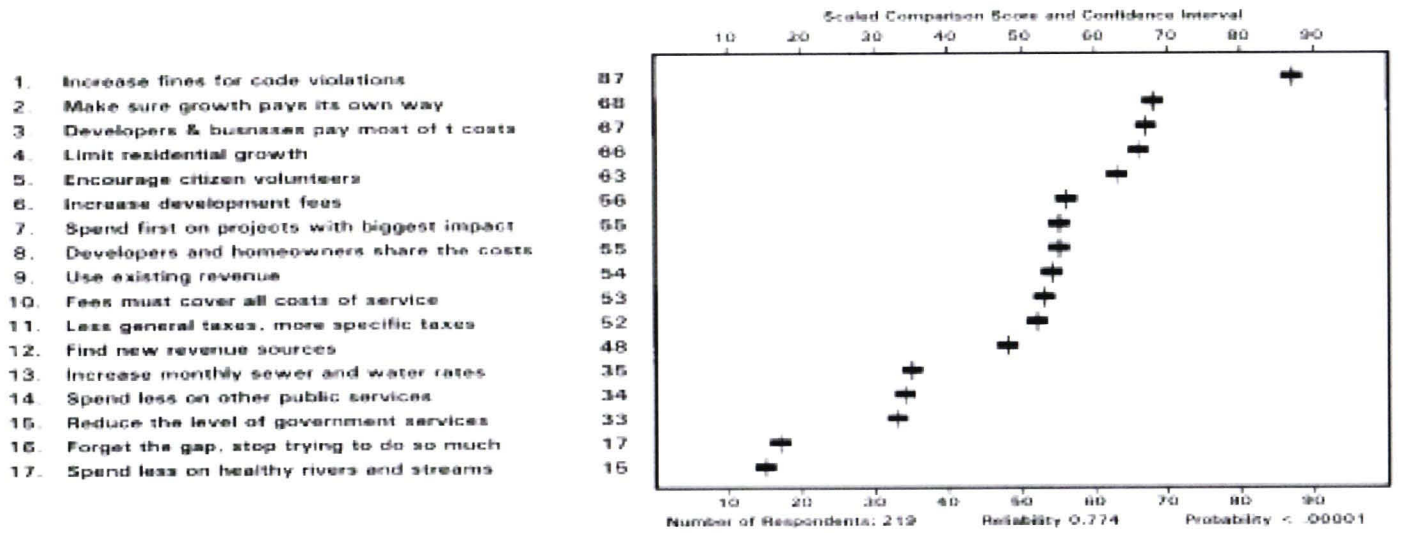

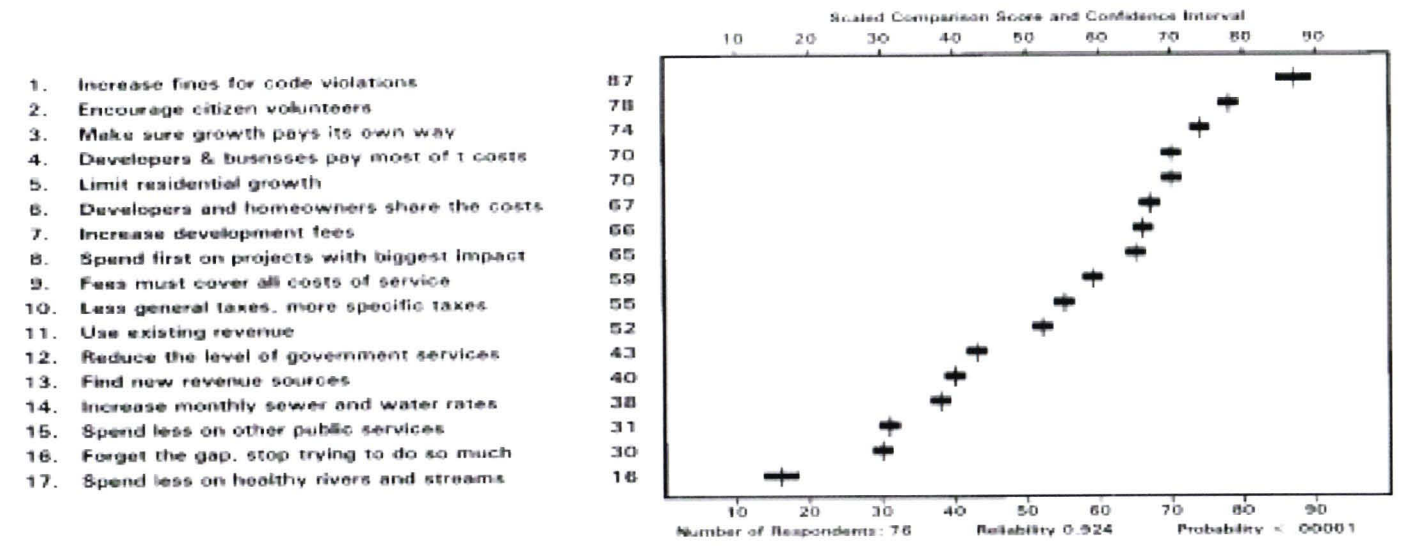

Stream enhancements proposed in the Action Plan are multi-benefit projects that support stream and wetland functions. Using the benefit transfer method, the District applied the $3537 per acre value of wetlands to estimate the proposed benefits of the capital stream enhancement projects in the Health Streams Action Plan. Table II-6 shows the anticipated costs and benefits (total net and future value) of the stream enhancement capital projects. The estimated cost of 20 years of stream enhancement projects is $25.9 million with a net benefit of over $125 million (future value). The cost to ratepayers for enhancement is approximately $0.42 per household per year. The net benefit per household (at current EDU levels) is estimated to be $2 per household per year, or $40 per household over the 20 years (future value).

Estimated Economic Values Using Substitute Cost Avoidance

The District also considered the substitute cost/cost avoidance valuation to determine the value of community tree plantings that create shade along streams. Chilling treated effluent at the Rock Creek Wastewater Treatment Plant to avoid increasing river temperatures would cost an estimated $40 million dollars in capital costs and $1.5 million in annual operating costs. Instead, Clean Water Services negotiated with the Oregon Department of Environmental Quality (DEQ) to plant trees along 35 miles of stream over the next 5 years to offset the effluent temperature. Planting 50 feet of buffer along both sides of streams for 35 miles (equating to 425 acres) would cost approximately $11.5 million, with an annual operating cost of approximately $105,000.

The District proposes to address the temperature mitigation needs of the treatment plants through a combination of two programs: Stream Partnership Opportunities Technical Advisory Committee (SPOTAC) for rural areas and the Community Tree Planting Challenge for urban areas. The Action Plan outlines the Community Tree Planting Challenge which identifies 34 miles (415 acres) of planting opportunities. Table II-6 Identifies the cost and benefits of the urban tree planting activities. Subtracting the costs of the planting, the net benefit of the tree planting is approximately $29 million over five years and $1.4 million annually over 20 years. The total future value of the net benefit over 20 years is over $69 million.

Finance Options

Financing for implementation of the Healthy Streams Plan has to consider the public's willingness to fund the activities and the estimated cost over time to implement actions that result in measurable environmental gains. The credible management and application of surface water management funds by Clean Water Services and the local jurisdictions is critical to the Plan's long-term viability.

Public References and Willingness to Finance Improvements

The public values survey (see Part II, Chapter 1) gave respondents 17 randomly paired options and asked which would be a better approach to bridge the funding gap if need outstrips current resources. As shown on Figure II-8, the general public and streamside property owners gave similar responses about funding options. Increasing fines for code violations was a top priority. This was followed by growth paying its own way; developers and business paying; limiting growth; and encouraging citizen volunteers. Finding new funding sources and increasing monthly sewer and

water rates were given a lower priority. The two least-desired options were to spend less on healthy rivers and streams and to stop trying to do so much. These least-desired choices validate other responses in the survey that indicate people attach a high importance to clean water for rivers, streams, and drinking water.

The public values survey also assessed people's willingness to pay for additional protections and improvements to the river and streams. Respondents were asked if they were willing to pay one of three amounts on a bi-monthly basis. Eight in ten public respondents and three in four streamside property owners were willing to pay an additional $2 to $4 bimonthly (Figure II-9). However, it is important to recognize people's willingness to pay could change when presented with the total fee burden. A fee increase of $1 to $2 per month would equate to $3.1 to $6.2 million annually for the surface water management program in the Tualatin Basin.

Figure II-9 *Public Willingness to Pay for Water Resource Improvements*

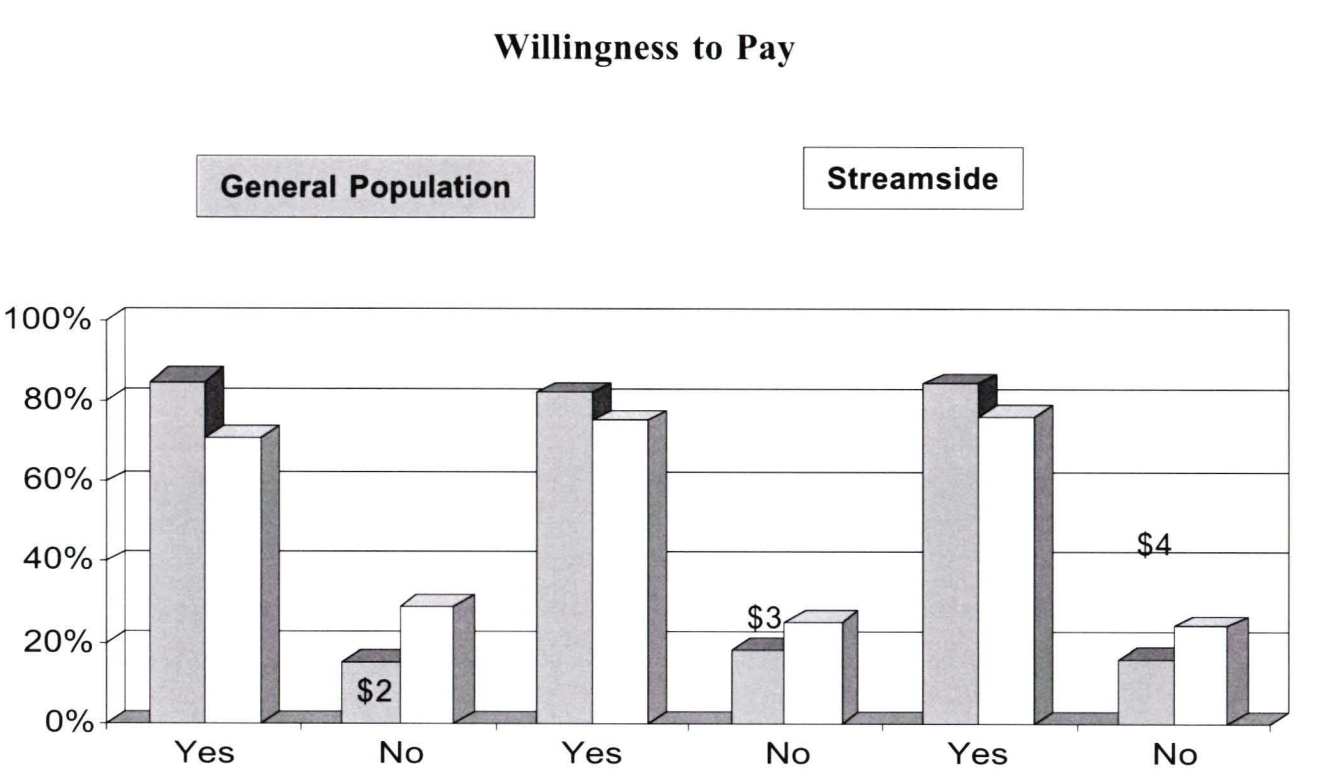

Funding Options

Clean Water Services and the local jurisdictions have several funding mechanisms for implementing the Healthy Streams Plan. The primary sources of surface water management funds are the:

- **Surface water management (SWM) fee [$4 per month per equivalent dwelling unit (EDU)]**
- **System development charges (SDCs) charged to developers**

The local jurisdictions also have access to parks funds and tree preservation/replacement funds that can be and often are applied to projects along streams. Through a regulatory temperature trading program, Clean Water Services can access sanitary sewer funds for stream-shading projects that offset the thermal load from the wastewater treatment plants. Grants, primarily for environmental enhancement projects, are available through the Oregon Watershed Enhancement Board, U.S. Fish and Wildlife Service, Federal Emergency Management Agency, National Oceanic and Atmospheric Administration, and U.S. Army Corps of Engineers, to name a few.

Surface Water Management Fee

The original $3 SWM fee was instituted in 1990 to address maintenance and operations costs. The fee was increased to $4 in 1998 to address inflationary pressure and the increasing need for capital improvements. Fiscally conservative spending on operations and maintenance, combined with rapid urbanization of the watershed throughout the 1990s and early 2000s, has resulted in growing fund balances, allowing Clean Water Services and local jurisdictions to implement a greater number of capital projects to improve the system's function.

The local jurisdictions of Beaverton, Cornelius, Forest Grove, Hillsboro, Sherwood, Tigard, and Tualatin collect the $4/month SWM fee from the community and provide $1 of the $4 to Clean Water Services. Clean Water Services retains the $4 fee in areas where it manages the surface water management program (Banks, North Plains, Durham, King City, Gaston, and unincorporated Washington County). Beaverton charges additional SWM fees beyond CWS requirements; other cities may do the same.

For comparison, Table II-7 shows the fees of other Oregon jurisdictions that have surface water management programs. Table II-8 shows the amount of surface water management funds (both SWM fees and SDCs) budgeted by each jurisdiction as of fiscal year 2004.

System Development Charges

SDCs are assessed to development projects to mitigate for impacts to the existing stormwater infrastructure. Clean Water Services charges $275/EDU for water quantity and $225/EDU for water quality. When water quality or quantity facilities are installed onsite, the SDC for the facility type is credited. If a development cannot provide an onsite water quality facility, a $25,000 SDC is

Table II-7
SWM Fees within Oregon

City/Jurisdiction	Monthly Fee - Residential
Clean Water Services	$4.00
Beaverton	$5.50
Corvallis	$4.98
Eugene	$7.08
Fairview	$6.42
Gresham	$6.25
Lake Oswego	$6.26
Milwaukie	$6.00
Oregon City	$4.00
Portland	$10.97
Springfield	$6.86
Wilsonville	$3.72

* equivalent dwelling unit size varies slightly between jurisdictions

Table II-8
SWM Funds By Jurisdiction as of FY 2004

	SWM Fees	SWM SDCs	Total SWM Funds*
Beaverton	$654,928	$1,935,924	$2,590,852
Clean Water Services*	$9,555,852	$390,972	$9,946,824
Cornelius	$65,772		$65,772
Forest Grove	$384,017	$136,022	$520,039
Hillsboro	$295,000	$7,755,000	$8,050,000
Sherwood	$356,802	$2,851,119	$3,207,921
Tigard	$572,438	$1,734,738	$2,307,176
Tualatin	$417,717	$1,258,626	$1,676,343
Totals	**$12,302,526**	**$16,062,401**	**$28,364,927**

* SWM Funds listed may already be committed to improvements. Check updated budgets and capital improvement progams for more detail.

applied so the District can install a facility in another location. The SDC funds are used for increasing infrastructure capacity, including the level of performance or service provided by the existing or new facility. To use the funds, a project must be listed on a master plan, capital improvement plan, or other plan approved by the District.

Fund Allocation

Clean Water Services' funds are applied for regional benefits, while the local jurisdictions apply their funds within their city limits. With the completion of the Healthy Streams Plan for the urban portions of the Tualatin Basin, and given the public's preference for green infrastructure projects to achieve water quality, quantity, and aquatic habitat goals, it would be appropriate to reexamine the distribution of surface water management funds among Clean Water Services and the local jurisdictions. Part I: Healthy Streams Action Plan, identifies policy and program refinements related to funding surface water management and implementing capital improvement projects. ■

Chapter
2.3

Environmental Data and Analysis

Developing a sustainable watershed plan requires an understanding of the factors that influence local watershed and stream health. While watershed geology is a baseline factor that cannot be changed, land use/cover and watershed imperviousness are ever-changing. Watershed alteration, in turn, influences stream hydrology, geomorphology, riparian vegetation, water quality, and aquatic habitat to varying degrees. What remains unclear, however, is the degree to which these environmental factors can be modified and still maintain a functioning system, or how much they can be repaired to facilitate a self-sustaining recovery of the stream system. It is known that ecologically healthy watersheds preserve the interconnected components of hydrology, geomorphology, riparian vegetation, water quality, and habitat characteristics, as well as the temporal and spatial variability of these characteristics (Naiman et al. 1992). Mimicking the attributes of healthy stream reaches (reference sites) offers some guidance for health targets. This section summarizes the existing conditions of key environmental indicators and identifies future targets for stream health within the Healthy Streams Plan study area.

Study Area

The Tualatin River Basin encompasses approximately 711 square miles of land between the Coast Range and Oregon's largest city, Portland, in the northwest corner of the state. The basin is approximately 42 miles long by 29 miles wide, with the Coast Range mountains to the west, the Tualatin Mountains to the north and east, and the Chehalem-Parrett Mountains to the south. It is located in the northwest corner of the Willamette River Basin, and constitutes 6 percent of the Willamette River Basin's land area. The Tualatin River Basin contains all of Washington County; small portions of Multnomah, Clackamas, and Yamhill Counties; and 12 incorporated cities (see Map 1 in the Introduction).

The 84-mile Tualatin River drains over 900 miles of streams, east to the Willamette River. The Healthy Streams Plan project evaluated in detail a total of 338 miles of streams and their associated floodplains and wetlands and approximately 42 miles of the Tualatin River. The detailed study area represents 34 percent of the Tualatin River Basin and primarily covers urban and urban fringe areas. Map II-1 shows the green infrastructure (streams, wetlands, floodplains, and their associated buffers) and its status (e.g., open or piped) in the Tualatin River Basin, as known in 2000-2003. Limitations in time, cost, and jurisdiction dictated the extent of the project coverage.

Methods

The methods used to collect and analyze environmental data included historic records and surveys, existing mapping and watershed planning information, aerial photography and interpretation, and detailed field work. Because of the basin's size and the limitations on site access, time, and funding, detailed field study was not conducted on all tributary streams. The information and maps provided in the Healthy Streams Plan are not intended to replace onsite data collection and analysis. Site conditions may vary from those portrayed in the Plan, depending on the time of the data collection, the level of detail in scientific method and interpretation, or other factors. The detailed methodologies and results for the surface water modeling and ecological survey are provided on Clean Water Services' website (www.cleanwaterservices.org) and in Appendix E.

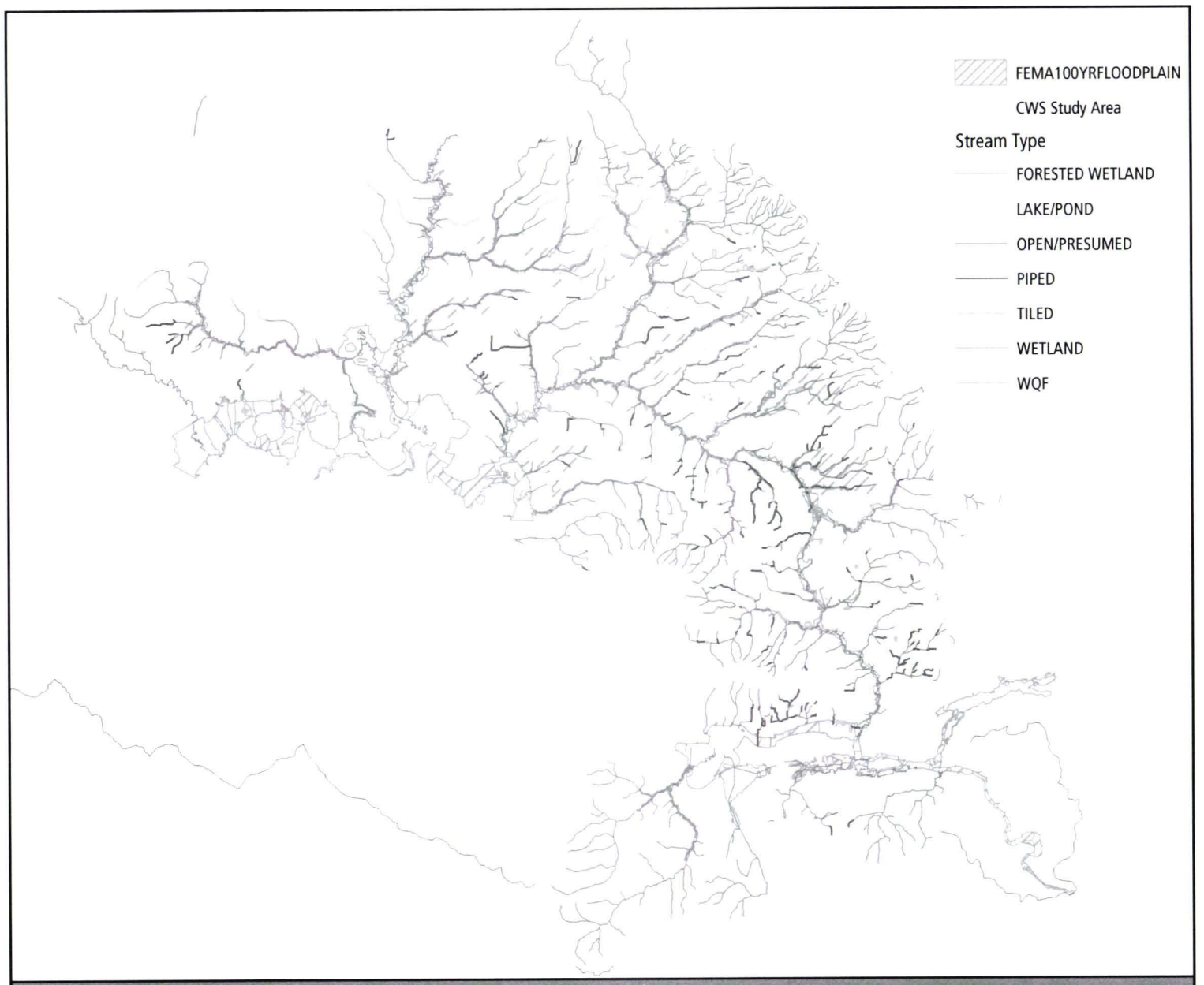

MAP II-1 Green Infrastructure

The Rapid Stream Assessment Technique (RSAT) was used to sample 516 representative stream cross-sections, which were then applied to distinct geomorphic and/or vegetative reaches of stream that represented the cross-section (Clean Water Services 2000). In a few cases where access was limited but vegetation and slope characteristics appeared consistent (such as in small, heavily forested, steep-gradient headwaters), RSAT characteristics of a neighboring stream were applied and noted as such.

Near-stream topography with 1- to 2-foot contours on the floodplain, stream cross-sections, and structure information are available for the detailed study area as a result of this project. The floodplain limits represent draft updates to the boundaries that were developed; approval from the Federal Emergency Management Agency (FEMA) is pending. Regular updates to mapping information will continue as additional access is granted and projects are implemented.

Miscellaneous data were also collected on 153 miles of stream and the river outside the study area. The sources included existing local watershed plans, high-resolution aerial photography, windshield (drive-by) surveys of accessible locations, U.S. Geological Survey maps, and Metro information. In addition, site-specific data collected by the Oregon Department of Fish and Wildlife (ODFW) for fish habitat and by ABR, Inc. for macroinvertebrate habitat were used to document the resource conditions.

Geologic Origins of the Watershed

The Tualatin River Basin is a bowl-shaped basin, with steep side slopes consisting of the Coast Range, Tualatin, and Chehalem-Parrett mountain ranges that transition into foothills before flattening out into a broad valley bottom. Based on available mapping data, elevations range from approximately 80 feet above mean sea level (msl) at the mouth of the Tualatin River to approximately 3,120 feet above msl at the height of the Coast Range. The Tualatin River drains east to the Willamette River though a natural breach in the Tualatin Mountain Range. Four other prehistoric low notches in the mountains around the basin include Wapato Lake, Fields Bridge, Oswego Notch, and Tonquin. The Tualatin River still flows through Oswego Notch (also called Rivergrove Gap) and Lake Oswego during significant storm events, such as the flood of 1996. The location, discharge point, and mountain boundaries provided a perfect settling basin for the prehistoric floodwaters that inundated the Columbia and Willamette Rivers during the retreat of the Wisconsin stage of the last ice age (OSU 1993a).

The Missoula, or Bretz, floods occurred approximately 15,500 to 13,000 years ago. Based on work performed by J. Harlen Bretz in the 1920s, it is now a widely accepted theory that ice dams periodically formed on the Clark Fork River in Idaho, resulting in a 3,100-square-mile lake in the present-day Missoula Valley, Montana (Figure II-10). When the ice dams periodically broke, the resulting floods sent an estimated 500 cubic miles of water rushing over eastern Washington and through the Columbia River Gorge backwater. These catastrophic floods are estimated to have occurred between 40 and 100 times over the course of 3,000 years. They filled the Willamette Valley floor with rich sediment deposits from Montana, Idaho, and Washington. An estimated 500 feet of floodwaters backed up into the basin via the river mouth, Tonquin, and Lake Oswego (OSU 1993a; Benson 1975 and 1978; Dietrich 1995). The prehistoric floods, combined with the limited snow melt hydrologic pattern, set the foundation for the observed geology and soil conditions of the basin.

Figure II-10 *The Bretz Floods*

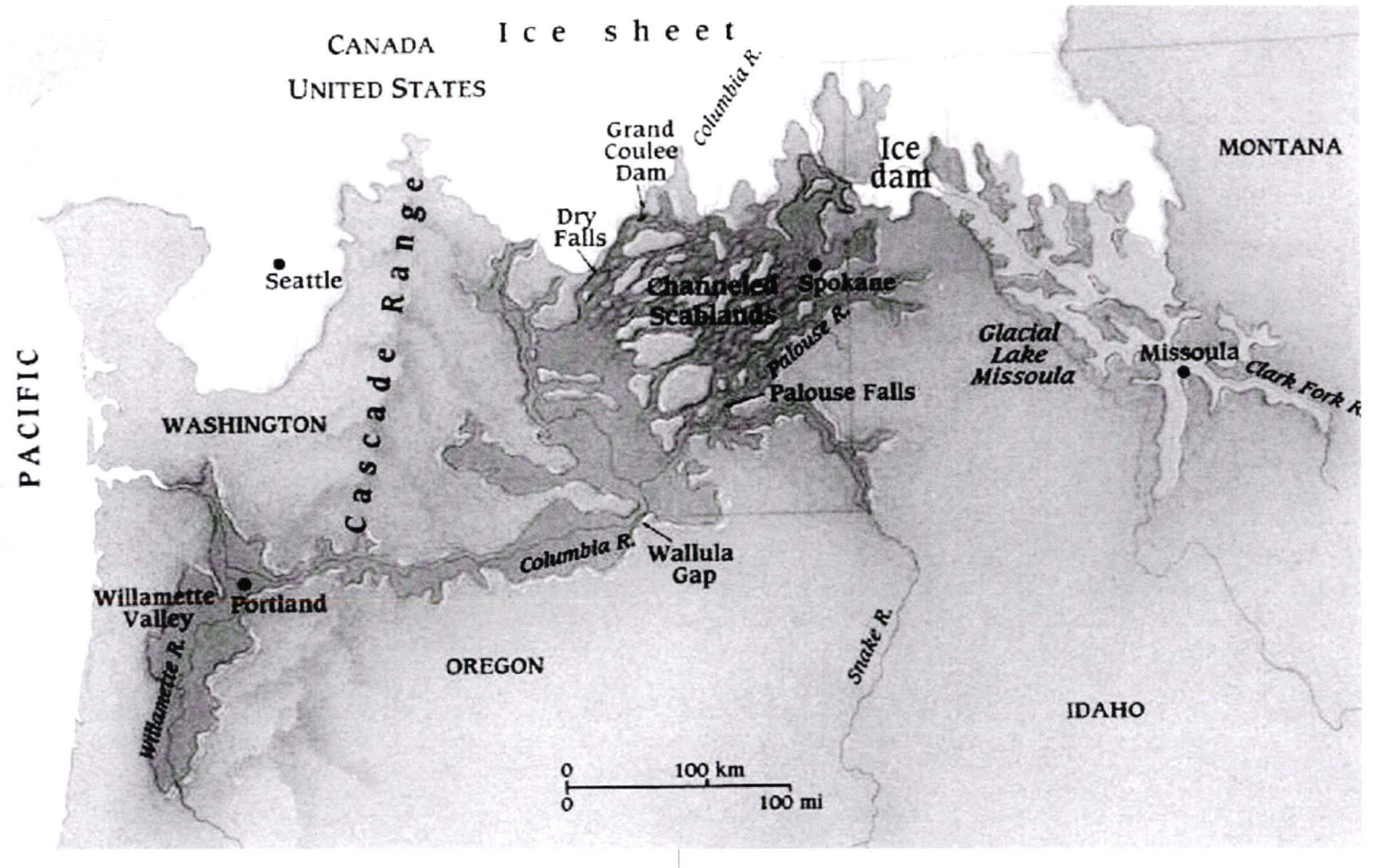

Geology and Soil

The Missoula floods dramatically influenced the landscape of the Tualatin River Basin. The geology and soil conditions of the river-stream network can be linked to the extent of flooding and sediment deposition that resulted from the great floods. Existing soil survey information (SCS 1982) and channel bed data were used to evaluate the general soil and geologic conditions.

In the mountains, above approximately elevation 200 to 250 feet, boulder/cobble/gravel stream bed conditions are observed as the dominant channel materials. The water typically flows clear and cold as stored groundwater emerges from fractured basalt parent material. The watershed land cover of dense forests and rich, thick topsoil create a highly effective sponge where overland runoff is limited.

Below elevation 200, on the foothills and valley floor, the observed geology is quite different and is composed primarily of silt and clay. The deposition of the floodwater sediment on the valley floor provided a dense, low-permeability soil that supported extensive wetlands and prairies. The river and its major tributaries must cut through this silt and clay as they meander down the valley. The water is murky, in part because of the suspended colloidal particles of sediment from the naturally occurring muddy bottom of the valley floor.

These base conditions are regularly influenced by the presence of beaver or artificial in-stream dams. Such structures can change the composition of the bed materials upstream and downstream of the dam site, particularly in headwater environments. Land-altering activities can also influence the soil structure, frequently reducing the permeability of native soils.

Land Use and Cover

The Tualatin River Basin is currently home to forest, agricultural, and urban landscapes that are publicly and privately owned. According to the mapping information available from Metro, approximately 40 percent (282 square miles) of the basin is forest lands, including portions of the Tillamook Forest in the Coast Range. A majority of the forest lands is located in the mountains and foothills of the basin and is dominated by Douglas fir and Oregon white oak woodlands, respectively. Agricultural lands cover approximately 33 percent (233 square miles) of the basin. On the valley floor, grass/hay, orchards, seasonal vegetables, and nurseries dominate. Vineyards are frequently located in the low foothills. There are also limited commercial livestock operations, consisting of cows, llamas, alpacas, horses, sheep, and goats (OSU 2004). Urban and urbanizing lands cover approximately 19 percent (133 square miles) of the basin. The urban area is contained by an urban growth boundary, which is designed to limit sprawl into prime forest and agricultural resource lands.

Historic land use and cover transitions were evaluated by reviewing historic records (Oregon State University 1993a-c) and land surveys (Munch 1990), historic aerial photography, historic mapping estimates from the Oregon Biodiversity Project (Defenders of Wildlife 1998) and current geographic information system (GIS) data provided by Metro. The land use and cover of the Tualatin River Basin have changed dramatically over the last 200 years. The mapped land survey of 1852 is available at Clean Water Services' website. The following section is a chronology of landscape change.

EIA represents impervious area that is directly connected to the storm drainage system and therefore contributes more significantly to changes in hydrologic function of the watershed. EIA is determined by assessing the level of connectivity of each sublevel land use type (e.g., residential curb and gutter versus residential ditch system) and then tallying by percentage in each subwatershed. EIA is more difficult to assess than TIA/MIA, but provides a more precise measure of actual watershed imperviousness.

Pre - 1800's

Native Americans used the Tualatin River Basin for subsistence living—primarily nuts, berries, wapato, tule, cedar, deer, elk, and beaver furs. They traded with tribes from Tillomock and the Clackamas Basin for salmon. The Atfalati periodically set fires to maintain the prairie grasslands necessary for efficient hunting of game and for the camas that grows in wet meadow environments (OSU 1993a).

1800 - 1850

Fur trappers moved into the Tualatin River Basin and within 45 years decimated the beaver population (OSU 1993a). Although it did not directly change the land cover, beaver harvesting had a significant impact on the land and water. The beaver had facilitated floodplain connectivity and wetland creation by damming small streams. Without the beaver manipulating the system, less water was stored in the landscape. As a result, the valley floor became more hospitable to European-style farming activities.

Early settlers also moved into the Tualatin River Basin and began to manipulate the natural landscape. By the 1840s, the agricultural economy was firmly established, growing wheat on the plains, onions in the floodplain flats, and prunes and hops in Patton Valley. The manufacturing of tile drains was one of the first industries in the basin; farmers were encouraged to dewater the landscape by installing tile drains and ditch systems throughout much of the valley floor (OSU 1993a). The tile draining and ditching reduced many of the small capillary streams and remaining wetlands of the watershed. Grasslands were converted to agricultural crop land; valley forests were logged for housing and heat; and remaining riparian areas along streams were reduced or eliminated. The changes to the landscape resulted in increased runoff from the land via the tiles and ditches and higher scouring flows in the river and streams during the wet season. "Flooding" of the floodplain was considered a problem, so woody debris that "clogged" the streams was removed to facilitate water movement downstream (OSU 1993a). Less water retention in the floodplains and uplands during the wet season probably resulted in lower instream flows during the dry season because shallow groundwater was not recharged. The loss of canopy cover allowed any remaining instream flow to heat up. Elevated water temperatures, combined with the natural phosphorus levels, provided conditions for algae to grow. Although the dewatering made the land productive for general farming earlier in the season, it also forced the need for irrigation, which came from instream water.

By 1850, the Native Americans of the Tualatin River Basin were virtually eliminated (OSU 1993a).

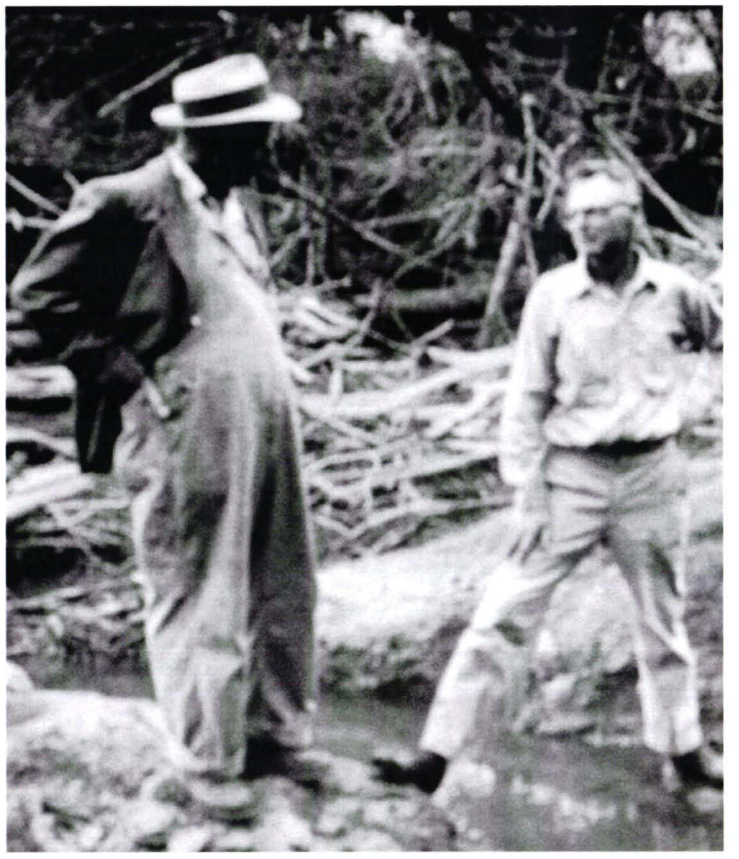

1850 - 1900

Above the valley floor, timber harvest of the upper watersheds also contributed to the decline of water supply and quality. Saw mills were established beginning in 1855; commercial lumber production coincided with the milling and shipping of wheat from the valley plains (OSU 1993a). Like the wetlands on the valley floor, forests (including their tree canopy cover, understory, groundcover, and thick soil duff) act as a sponge, absorbing precipitation and recharging groundwater that provides base flows to streams. With the loss of forest cover, the wet-season runoff rates increased, and dry-season base flows decreased. The loss of near-stream canopy cover also resulted in waters warming as they moved downstream. Soil erosion from timber harvest activities on steeply sloped lands sent sediment downstream, filling remaining instream ponds and wetlands with silt and further decreasing the system's capacity to absorb water. Settlers on the valley floor experienced increased flooding and declining water quality, resulting in part from the activities in the upper watershed (OSU 1993a; Farnell 1978; OSU 1992).

1900 - 1950

With the proliferation of low-cost automobiles in the 1940s and 50s, modern urbanization came to the basin. The small towns of Hillsboro, Forest Grove, Beaverton, and Tualatin began to absorb increasing populations that worked in Portland but lived in Washington County. With transportation and housing needs came the impervious cover of roads, parking lots, and roofs and the stormwater drainage systems necessary to keep the landscape dry for human habitation. The decline in pervious cover was most dramatic in the eastern half of the basin, which is closer to Portland.

1950 - 2000

With all the rapid development in the basin, the U.S. Army Corps of Engineers expressed concern in the early 1950s about over-development in the floodplains. By 1964, there were 326 dwellings in the floodplain—123 in Tualatin alone—that flooded during a significant flood event that year (OSU 1993a; USACE 1969). Following the 1964 flood, floodplain maps were developed for Washington County. The State of Oregon passed land use laws in the 1970s in an effort to manage and contain urban expansion. The urban growth boundary has contained urbanization to 19 percent of the basin's land cover.

Watershed Impervious Area

The health of a stream can often be estimated by using watershed imperviousness as a surrogate. Imperviousness is the sum of all roads, parking lots, rooftops, sidewalks, and other non-permeable surfaces in the urban landscape. It has been linked to changes in hydrology, water quality, habitat structure, and biodiversity of aquatic ecosystems (Schuler 2000a). Studies conducted by the University of Washington's Center for Water and Watershed Studies have shown cause-effect relationships among the chemical and physical variables resulting from urbanization (impervious area) and the response of aquatic biota (May et al. 2000). The District found similar correlations between macro-invertebrate community condition and the percentage of effective impervious area.

Watershed imperviousness was evaluated in several ways during development of the Healthy Stream Plan. The first method used GIS to assign a percentage of imperviousness to different land uses and then tally each of the land uses by its percentage in each subwatershed. The resulting total, or mapped, impervious area (TIA or MIA) was then converted to effective impervious area (EIA), using equations developed by a local surface water engineer (Sutherland 1995), so the information could be used in hydrologic modeling. Map II-2 shows the percent effective impervious cover for year 2000 and for the 2040 build-out scenario.

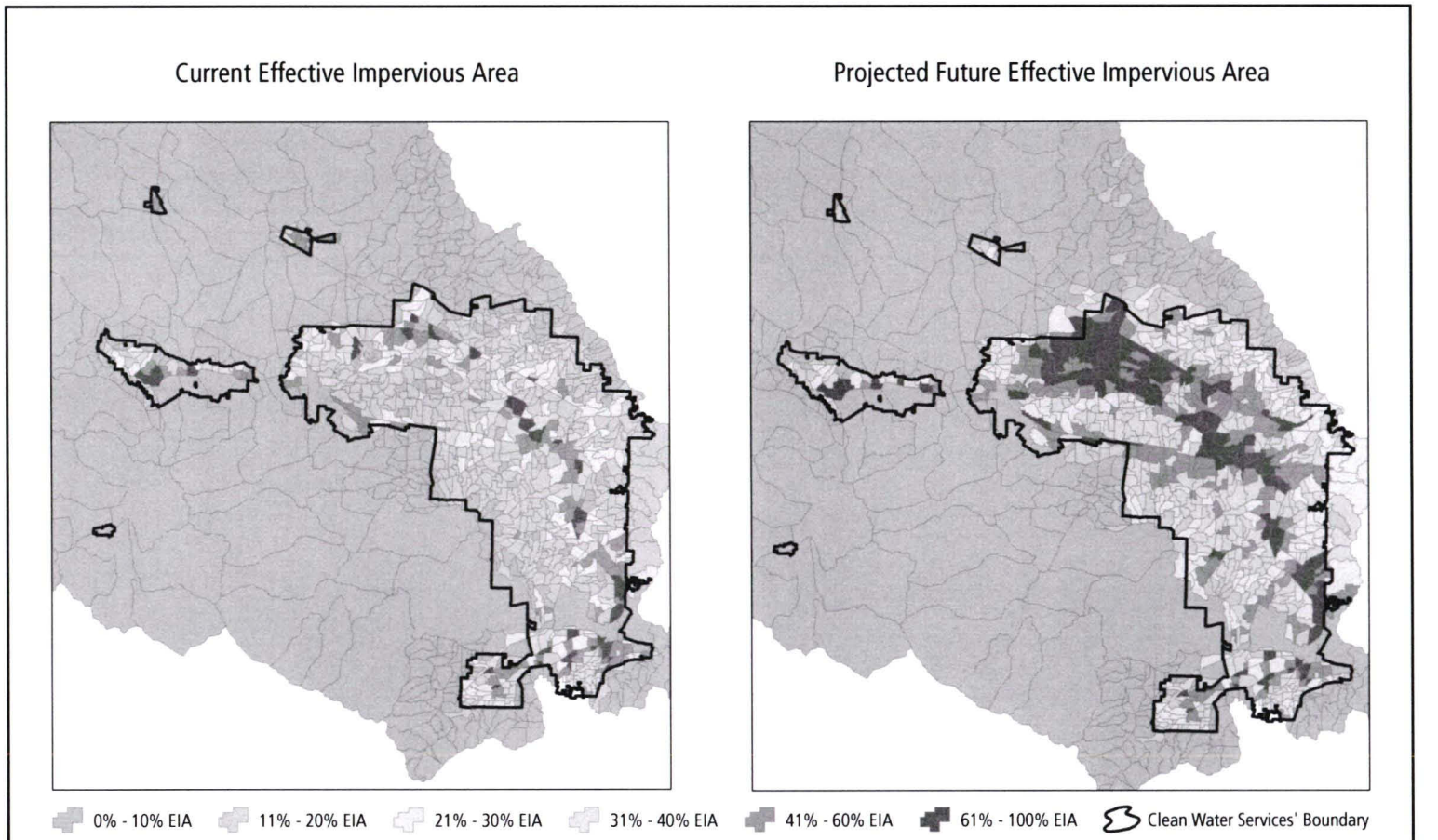

MAP II-2 Current and Estimated Future Effective Impervious Area Based on Land Use

Clean Water Services also contracted with Portland State University to compile data for Bronson Creek, which was used as a model urbanizing watershed. Graduate students directly digitized impervious features from aerial photography for 1994 to 2001. The imperviousness (TIA) of Bronson Creek increased from 14.5 percent (464.7 acres) in 1994 to 22.4 percent (714.8 acres) in 2001, increasing at an average rate of 1.2 percent per year (Creech 2003). Table II-9 shows the percent coverage of six categories between 1994 and 2001. In 2001, a total of 54.5 percent of impervious area is dedicated to car habitat (driveways, parking lots, and roads), and 44.6 percent is dedicated to human habitat (buildings and sidewalks) (Creech, 2003). Creech also compared TIA estimates derived from a direct digitized method to estimates derived from calculations from land use class. The analysis found that TIA from land use class was underestimated in single-family residential categories and overestimated in mixed use and industrial categories.

Using the categories of land use zoning in each subwatershed of Bronson Creek in 2000 and the percentage of surface cover (e.g., buildings and roads) found within each zoning category, Clean Water Services extrapolated the percent cover of each surface category for the area within the urban growth boundary. Figure II-11 shows the acreage of each impervious cover type. The total impervious area within the urban growth boundary was estimated at 28 percent.

A significant body of scientific evidence that extends across diverse geographic regions, concentrates on many different variables, and employs widely different methods has yielded a similar conclusion: stream degradation occurs at relatively low levels of imperviousness, less than 10 percent TIA (Schuler 2001). Studies by the University of Washington (May et al. 2000; Henshaw and Booth 2000; Booth et al. 1997; Booth and Jackson 1997; Horner et al. 1997) have found that a host of physical habitat and biolog-

Table II-9 ***Percentage of Impervious Cover Types in the Bronson Creek Watershed***

Surface	1994	1995	1996	1997	1998	1999	2000	2001	8 yr Average	2001
Buildings	36.6%	37.4%	37.2%	36.9%	37.1%	37.6%	37.9%	37.9%	37%	Human habitat
Sidewalks	5.6%	5.4%	5.6%	6.1%	6.2%	6.6%	6.7%	6.7%	6%	44.6%
Roads	31.9%	31.3%	29.4%	28.7%	28.6%	27.3%	26.9%	27.0%	29%	Car habitat
Parking lots	17.7%	17.8%	19.7%	19.5%	19.6%	19.5%	19.5%	19.2%	19%	54.5%
Driveways	7.4%	7.3%	7.3%	7.9%	7.7%	8.1%	8.2%	8.3%	8%	
Miscellaneous	0.8%	0.8%	0.8%	0.9%	0.9%	0.9%	0.9%	0.9%	1%	
	100%	100%	100%	100%	100%	100%	100%	100%	100%	

Figure II-11
Extrapolated Impervious Coverage Acreage inside the UGB

Impervious Area Ty	Acres
driveway	1,066
building footprint	7,840
misc	156
parking	5,136
roads	2,319
sidewalk	1,028
no EIA	44,853
Total EIA	**17,545**
Total Acres of Land	**62,399**

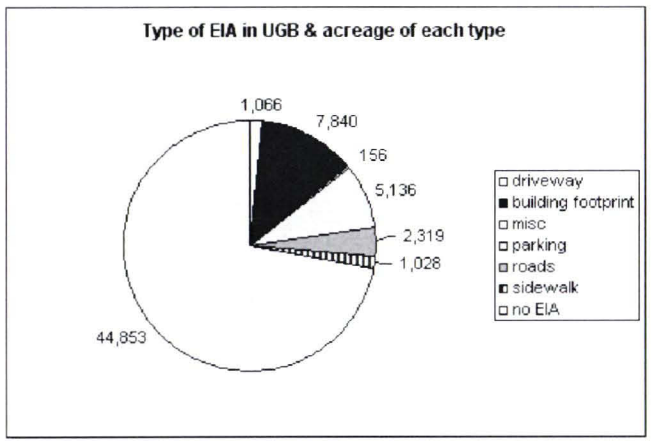

Figure II-13
EIA plotted against multimetric score of macroinvertebrate communities in high gradient streams

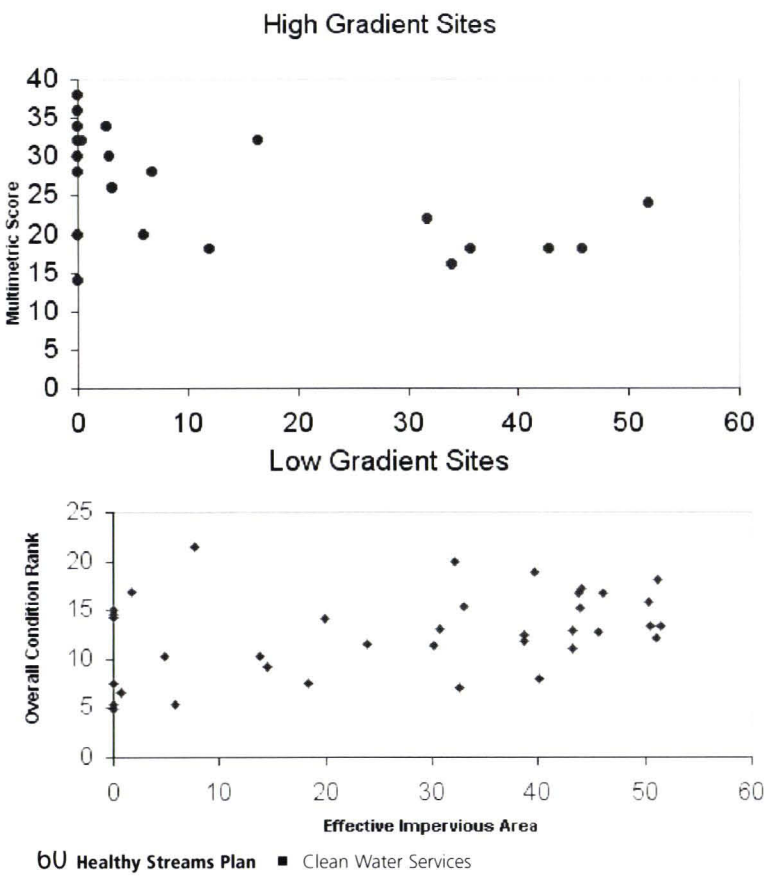

Figure II-12 *Puget Sound Imperviousness Plotted Against the Index of Biotic Integrity*

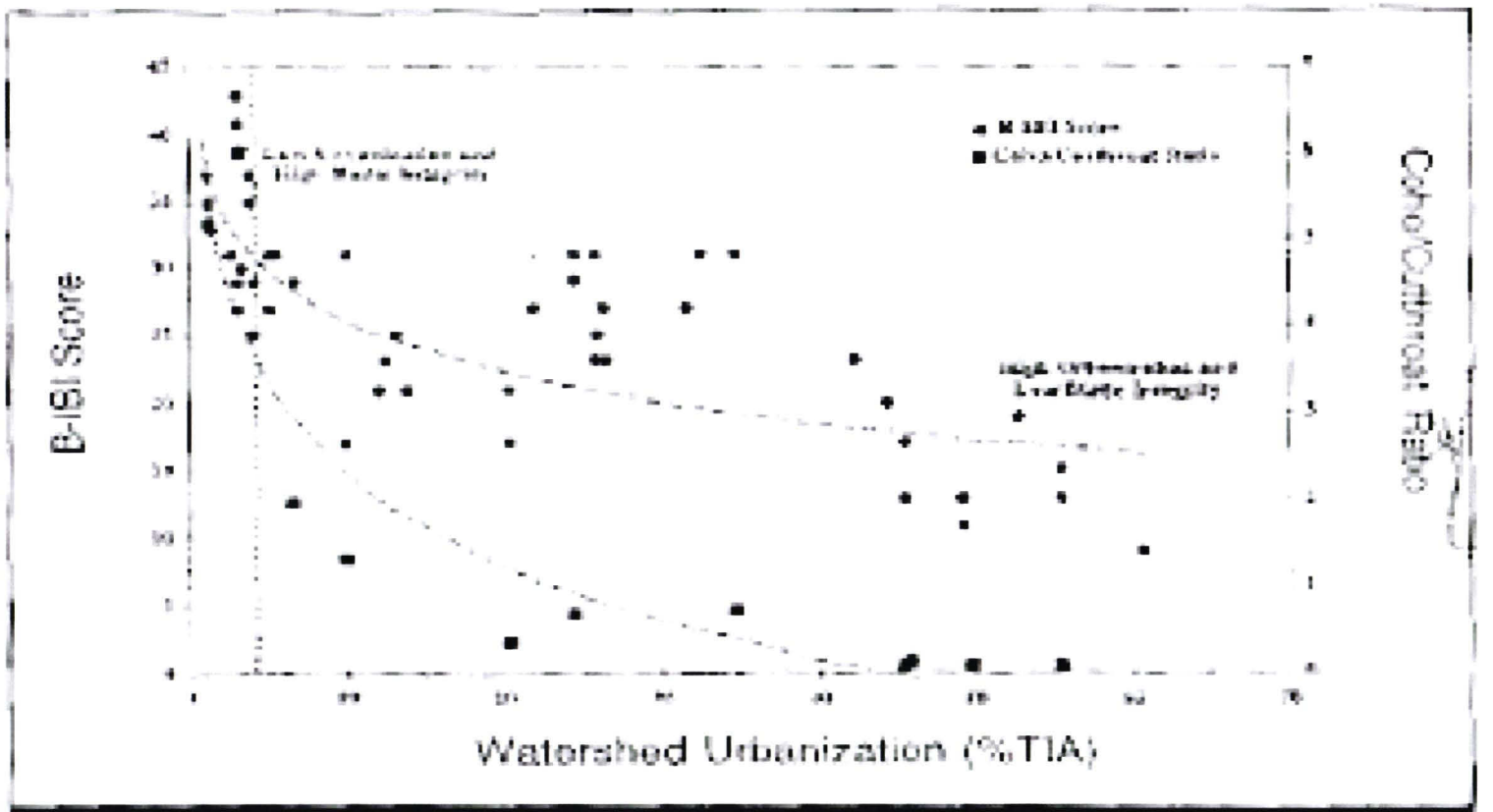

Figure 9: Relationship Between Instream Habitat Quality and Biotic Integrity

ical characteristics change with increasing urbanization, most rapidly in areas where TIA has increased from 0 to between 5 and 8 percent. The rate of alteration of habitat and biology usually slows with increasing urbanization. However, the modified hydrology that accompanies urbanization exerts the earliest and, at least initially, the strongest deleterious influences on freshwater ecosystems. For the Puget Sound lowlands, TIA plotted against the stream benthic index of biotic integrity shows steep rates of decline in biological function as imperviousness increases (Figure II-12). However, the studies also indicate that extensive riparian protection and stormwater management efforts can hedge against some of the decline (Horner et al. 1997).

In the Tualatin Basin, the correlation between EIA and macroinvertebrate community conditions is also significant. The geology of the watershed requires the data to be sorted between high gradient (>1.5 percent slope, commonly rock dominated) and low gradient (<1.5 percent slope, commonly silt-clay dominated) streams. The data for high-gradient streams suggest a threshold of 10-15 percent EIA, beyond which macroinvertebrate communities are moderately to severely impaired (Figure II-13). In the low-gradient streams, the relationship between EIA and overall condition was also significant, although not as strong as between the multimetric score and the EIA in high-gradient streams (Figure II-14).

One strategy that can be used to improve ecosystem functions in a watershed is to reduce the amount of EIA by dispersing and retaining water on the landscape to mimic historic hydrologic conditions. An advanced stormwater management approach could set imperviousness targets for the subwatersheds so that as development and redevelopment occurs, the EIA of watersheds could be maintained or reduced over time. Subwatershed-specific stormwater management would allow the District to strategically manage for the water quality and quantity needs of each stream system. In addition to stormwater management, the provision and enhancement of streamside buffers can hedge against some of the negative consequences of imperviousness. Part I: Healthy Streams Action Plan, recommends land use and stormwater policies to address impacts from imperviousness.

Figure II-15 *The Hydrologic Cycle and the Influence of Changing Land Cover*

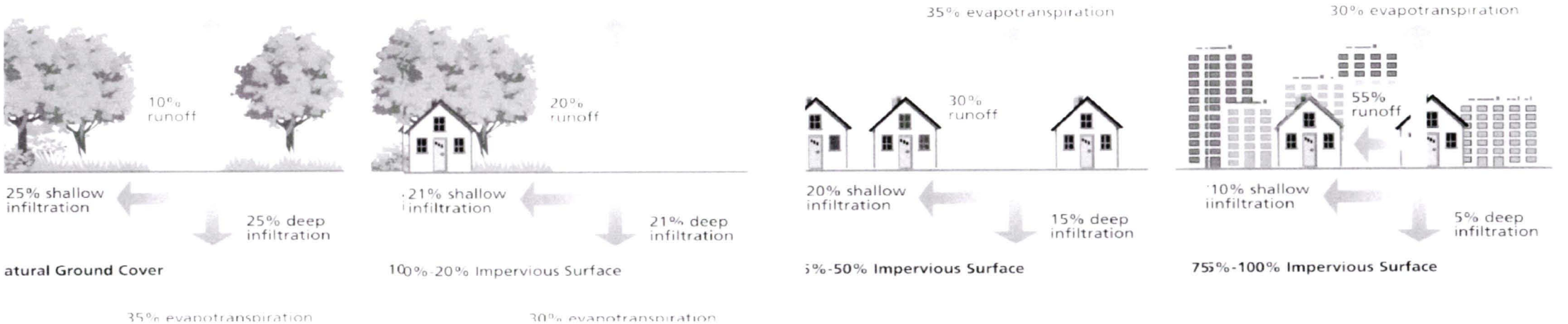

Hydrology

The hydrology of ecologically healthy watersheds is strongly influenced by the quantity and timing of flow, seasonal water storage and sources, and the dynamics of subsurface water exchange (Naiman et al. 1992). Changes in land cover, from forest to agriculture to urban impervious cover, influence the hydrologic cycle (Figure II-15). Field observations and water resource modeling suggest that wetland and land dewatering, deforestation of mountainous headwaters, stormwater infrastructure, surface and groundwater withdrawals, and installation of dams and weirs, among other activities, have altered the hydrologic cycle and flood dynamics of the Tualatin River Basin.

Base flows in the Tualatin system are low, with some historically perennial streams drying out completely during low rainfall years. Accelerated runoff from the landscape during the rainy season can limit groundwater recharge, which in turn may reduce stream base flows in the dry season. Base flows are also reduced with the over-appropriation and withdrawal of water from almost all streams and the Tualatin River. The lack of adequate summer base flow can impact water quality and aquatic species.

Peak flows in the Tualatin system have also been altered by watershed changes. Flooding is a natural occurrence along streams and rivers. In healthy watersheds of the Pacific Northwest, valley bottoms are flooded or wet throughout much of the year. Floods create disturbances that facilitate heterogeneous habitat and recharge alluvial aquifers and floodplain wetlands (Naiman et al. 1992). The elevated peak flow intensities and volumes of an altered watershed can change flood frequency and duration in a manner that is detrimental to streams, rather than a healthy disturbance regime. Channel scour and incision resulting from altered peak flows can lead to floodplain disconnection, loss of riparian vegetation, and impacts to water quality and aquatic species.

For the Healthy Streams Plan, Clean Water Services evaluated sur-

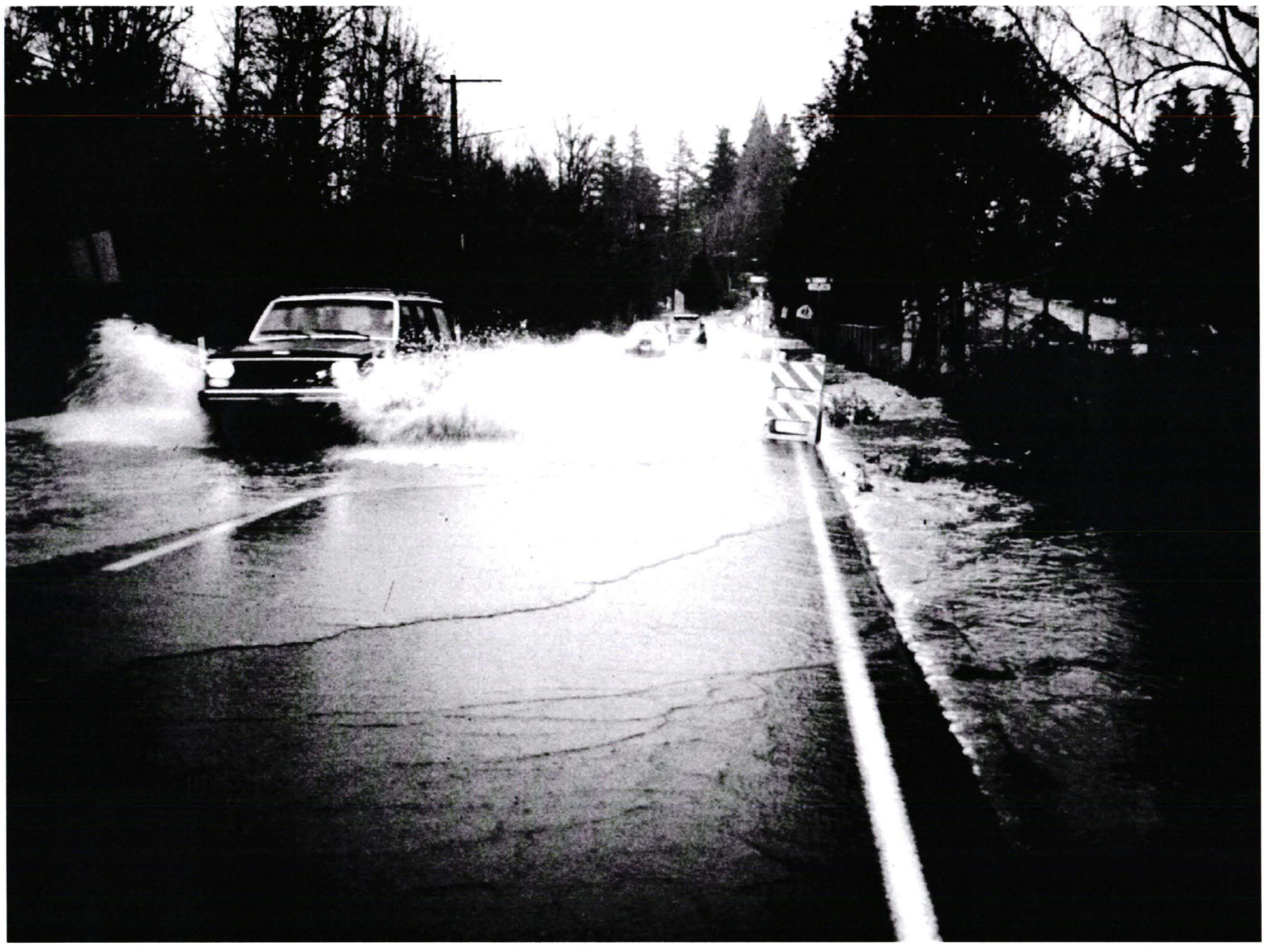

It sure does rain a lot in Oregon!

Table II-10 *Average Monthly Temperature and Precipitation for the Tualatin Basin*

Years 1971-2000	Jan	Feb	Mar	Apr	May	Jun	Jul	Aug	Sep	Oct	Nov	Dec	Mean
Hillsboro, OR													
Monthly mean temperature (F)	40.5	43.6	47.8	51.8	57.2	62.4	67.6	67.5	62.8	53.9	45.8	40.7	53.5
Monthly mean precip (in)	5.76	4.72	3.93	2.46	1.9	1.47	0.6	0.9	1.55	2.67	5.9	6.33	38.19
Beaverton 2 SSW, OR													
Monthly mean temperature (F)	40	43	46.7	50.7	56.3	61.6	66.8	67.1	62.6	53.6	45.3	40.3	52.8
Monthly mean precip (in)	5.83	4.84	4.06	2.79	2.25	1.62	0.68	0.84	1.64	2.92	6.07	6.41	39.95
Forest Grove, OR													
Monthly mean temperature (F)	39.1	42.5	46.8	50.9	57.2	62.7	68.5	68.8	63.4	53.6	44.8	39.4	53.1
Monthly mean precip (in)	7.09	6.13	4.91	3.04	2.03	1.45	0.53	0.76	1.55	3.09	7.47	7.83	45.88
Portland WSO-AP, OR													
Monthly mean temperature (F)	39.9	43.1	47.2	51.2	57.1	62.7	68.1	68.5	63.6	54.3	45.8	40.2	53.5
Monthly mean precip (in)	5.07	4.18	3.71	2.64	2.38	1.59	0.72	0.93	1.65	2.88	5.61	5.71	37.07

Figure II-16 *Distribution of Rainfall by Storm Size*

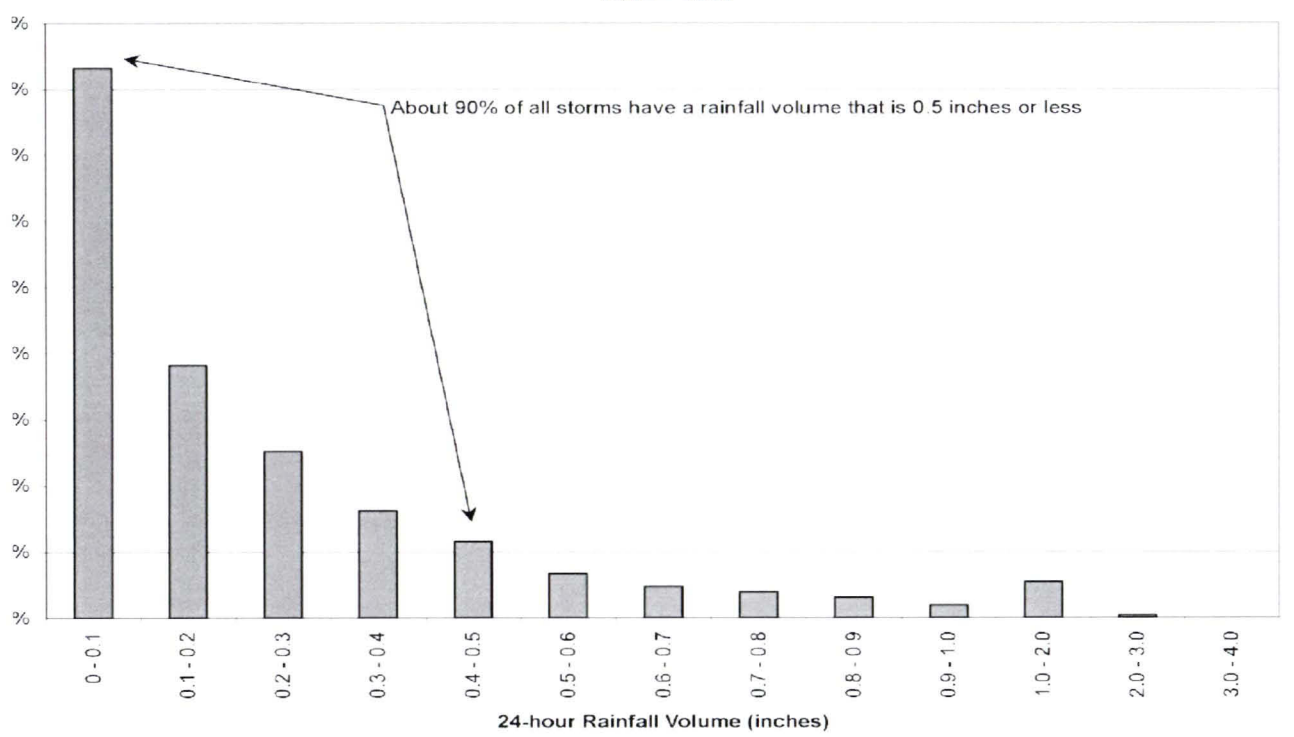

face waters by compiling and analyzing rainfall, stream flow, river flow, water rights, and water supply/storage data. Models were built for storm event-based hydrology (rainfall to runoff analysis) and hydraulics (water behavior and elevation analysis) for subwatersheds in the urban and urban fringe portions of the basin. Based on the updated modeling information, floodplain boundaries were remapped, with technical assistance and financial support from FEMA.

Climate and Rainfall Patterns

The Tualatin River Basin has a climate dominated by the maritime influences of the Pacific Ocean. During the rainy season (October through May) there is steady low-intensity precipitation, with periods of high-intensity storms typically occurring December through February. The rainy season temperatures are typically mild, with limited snow or ice events in the valley bottom. There is little precipitation in the dry season (June through September), except for the rare moderate-intensity thunderstorm. The seasonal temperatures are mild to warm, with several incidents of multi-day hot weather typically occurring in late July or August.

The Coast Range creates a rainshadow, distributing a majority of the rain (averaging 110 inches) in the mountainous headwaters and less (averaging 38 inches) on the valley floor as winter storms move west to east across the basin. The average annual precipitation is approximately 40 inches per year, but varies widely depending on the location (MGS 2001). Table II-10 shows the average monthly and seasonal temperatures and precipitation for the Tualatin River Basin and the region (Oregon Climate Service 2004; Aroner 2002).

Local rainfall gages are used to evaluate rainfall patterns in the Tualatin Basin. Four long-term (since 1971) rainfall gage stations are located in Beaverton, Forest Grove, Dilley, and Hillsboro, along with a variety of other gages with shorter or inconsistent data collection. The District also used the Portland International Airport rainfall gage, which has collected data since 1938, because the rainfall has proven similar to that of the local gages.

An analysis of the rainfall distribution in the basin shows three distinctive categories of storms. Short-duration storms are primarily warm-season events, with periods of intense precipitation lasting 10 to 30 minutes over a 1- to 6-hour period. Intermediate-duration storms occur throughout the year, but are most common in the fall/early winter, with moderate to high-intensity precipitation lasting several hours over a 6- to 18-hour period. Long-duration storms are most common in late fall and winter and are associated with continental-scale weather systems originating over the Pacific Ocean. These long-duration storms often produce flooding and are characterized by low to moderate intensities, have durations varying from 24 to 72 hours, and continue over several days (MGS 2001; Pacific Water Resources et al. 2003).

In general, 90 percent of the rainfall comes in the form of low-intensity rains of less than 0.5 inches in 24 hours (Figure II-16). These low-intensity events typically produce runoff only if there has been at least .05 inches of rainfall per hour. These storms are in stark contrast to events such as that in February 1996, when saturated soils were frozen, effectively rendering the soil impervious. The freeze, followed by a thaw with intense rainfall over a 5-day period, resulted in the most significant flood event in the Tualatin River Basin since 1964 (Pacific Water Resources 2004).

Storm Modeling

Synthetic storms, based on statistical analysis of precipitation, can be used to generate modeled stream hydrology. For watershed hydrology and hydraulic modeling, Clean Water Services' consultants used the Corps of Engineers HEC-HMS and HEC-RAS models and the Runoff Time Series (RTS) model. Variations of the synthetic storms were used for different project elements, as outlined below:

- **For the floodplain mapping, HEC-HMS and HEC-RAS models were used with the standard SCS Type 1A 24-hour duration storm because it represented more conservative (higher) peak flow data, which resulted in surface water elevations slightly higher than may actually occur in a longer-duration event. FEMA chose to use the 24-hour storm event to retain a conservative estimate of the floodplain extent.**
- **For conveyance modeling (HEC-RAS) associated with structures (bridges, culverts), the peak-based 72-hour duration storm was used to determine capacity issues. Future projects should use the 72-hour storm in conveyance calculations to ensure adequate conveyance for the maximum peaks to pass through a structure.**
- **For onsite stormwater management analysis, the event-based HEC models were converted to continuous runs (under the RTS method) to examine water quality and quantity management scenarios. The details regarding the RTS model use are part of the proposed updates to design and construction standards (see Table I-1, section 1.0) and could include:**
  - **For water quantity management of storms, the continuous RTS model could be used to more accurately predict the runoff volumes that require detention.**
  - **For water quality pretreatment, the continuous model could be used to determine the appropriate pretreatment flows and volumes necessary to capture optimal pollutant washoff (Pacific Water Resources 2004).**

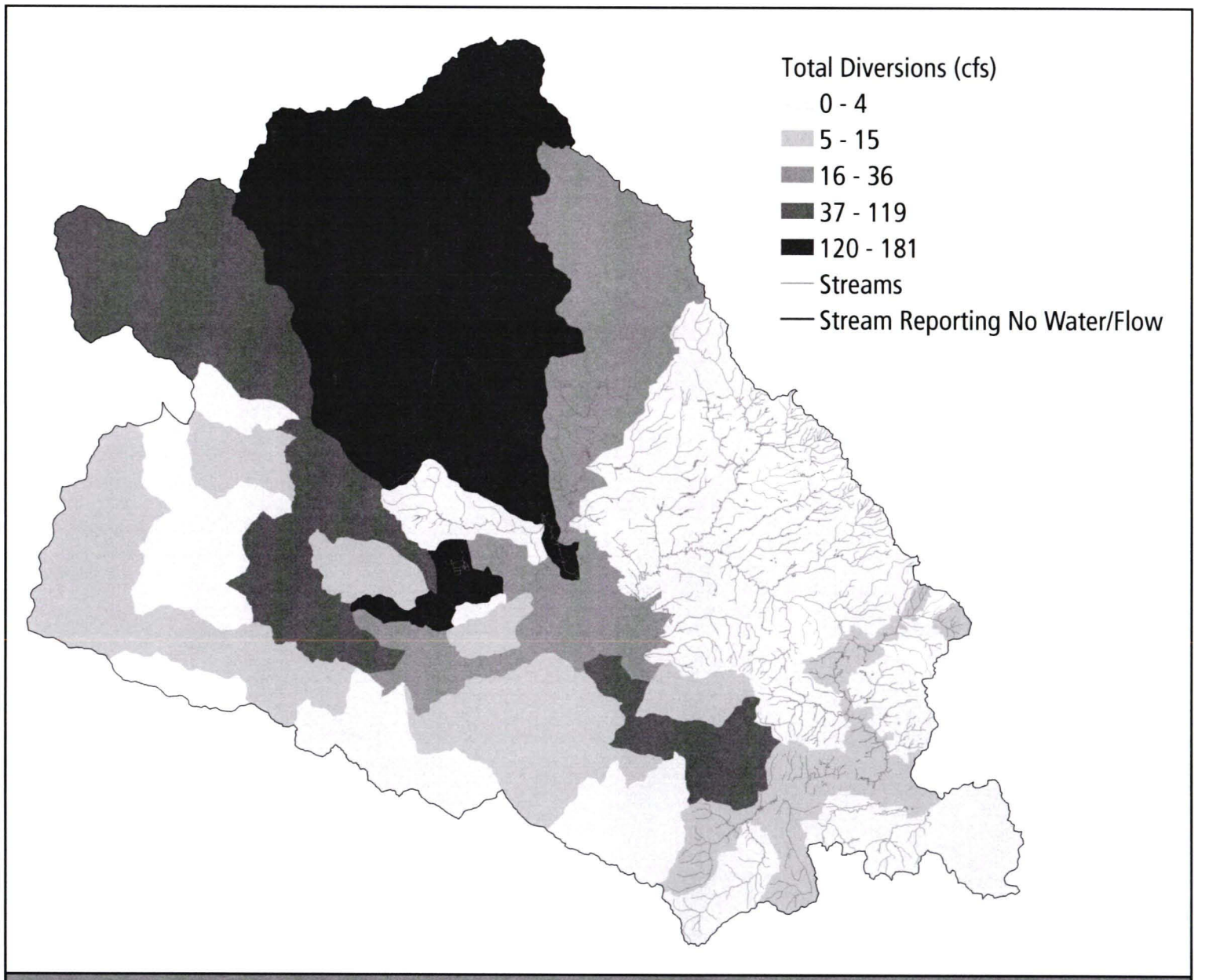

MAP II-3 Stream Flow Deficiencies

Understanding the different types of storms, model applications, and their corresponding hydrologic analysis is an important factor in accurately predicting stream dynamics and the relative impact of stormwater on the surface water system. The complete rainfall and storm analysis reports are available on Clean Water Services' website (www.cleanwaterservices.org).

Stream Flow

Stream base flow hydrology is difficult to assess because of the high level of variability in landscape conditions, soils, geologic parent materials, and rainfall distribution. There are 49 stream flow gages in the Tualatin River Basin; of these, 35 are equipped with continuous loggers, each with variable years of record (see Appendix E). The limited data available (less than 3 years), together with the complexity and uncertainty associated with water

Table II-11 *History of Base Flow augmentation to Tualatin River*

Year	Start Date	End Date	Total Release Days	Total Release	Average per Release Day (acre-ft)	Minimum Monthly Flow at Farmington (RM 33.3) (CFS)
1987	9-Jun	30-Nov	175	16,722	48.2	138
1988	2-Jul	4-Nov	126	15,071	60.3	149
1989	27-Jun	15-Nov	141	16,586	59.3	158
1990	12-Jul	1-Nov	113	11,889	53	172
1991	12-Jul	4-Nov	116	13,024	56.6	181
1992	5-Jun	19-Nov	168	12,730	38.2	138
1993	3-Jul	1-Dec	150	11,486	38.6	154
1994	21-Jun	27-Oct	129	10,917	42.7	137
1995	24-Jun	8-Nov	138	9,824	35.9	174
1996	27-Jul	10-Nov	114	10,952	48.4	205
1997	4-Jul	2-Oct	91	6,716	37.2	202
1998	12-Aug	7-Nov	87	9,407	54.5	175
1999	27-Jul	12-Nov	109	12,001	55.5	188
2000	21-Jul	27-Nov	130	15,275	59.2	174
2001	25-Sep	14-Nov	50	2,403	24	114
2002	12-Jun	9-Nov	151	12,618	42	103

Clean Water Services — Barney Reservoir Releases

Year	Start Date	End Date	Total Release (acre-ft)	Average per Release Day (cfs)	Comment
1998	12-Jul	27-Aug	2,779	24.6	extra water released to draw down reservoir
1999	1-Sep	19-Oct	1,025	10	10 cfs also released 6/4–6/10
2000	8-Sep	23-Oct	1,461	18	—
2001	18-Sep	29-Oct	1,416	17	1000 acre-ft purchased in addtion to allocation reservoir did not fill;4,000 acre-ft held in reserve
2002	26-Aug	24-Oct	1,667	14	—

rights and water withdrawals, restrict Clean Water Services' ability to accurately predict average base flow. However, field observations suggest that the lack of base flows is a critical issue for a majority of the streams throughout the study area. The investigators found low water with no measurable flow or no water present in 271 of the 516 sites, which represent an estimated 181 miles of stream. Map II-3 shows areas lacking base flow at the time of sampling in 2000. Currently, no known flow restoration activities occur in local streams.

Peak flow data have been gathered for a limited number of streams and were used to calibrate the hydrology models (see Watershed Hydrology Modeling, below). The gages and models show that peak flows in urbanized watersheds with higher EIA produce hydrographs that rise and fall much faster than similar watersheds that are less developed and have lower EIA. The volume of the flows is also higher because more water runs off the landscape than soaks into the ground (see Figure II-15). These observations suggest that rainfall is efficiently converted to runoff in the urban environment, rather than being retained and infiltrated into groundwater. The elevated peak flows result in more frequent stream channel scour, which leads to adjustments in geomorphic conditions, riparian vegetation, water quality, and aquatic habitat.

The model information, combined with the verified field data and recent scientific literature, were used to identify opportunities to improve water quantity management for the benefit of stream

Figure II-17 *Flow Augmentation in the Tualatin River*

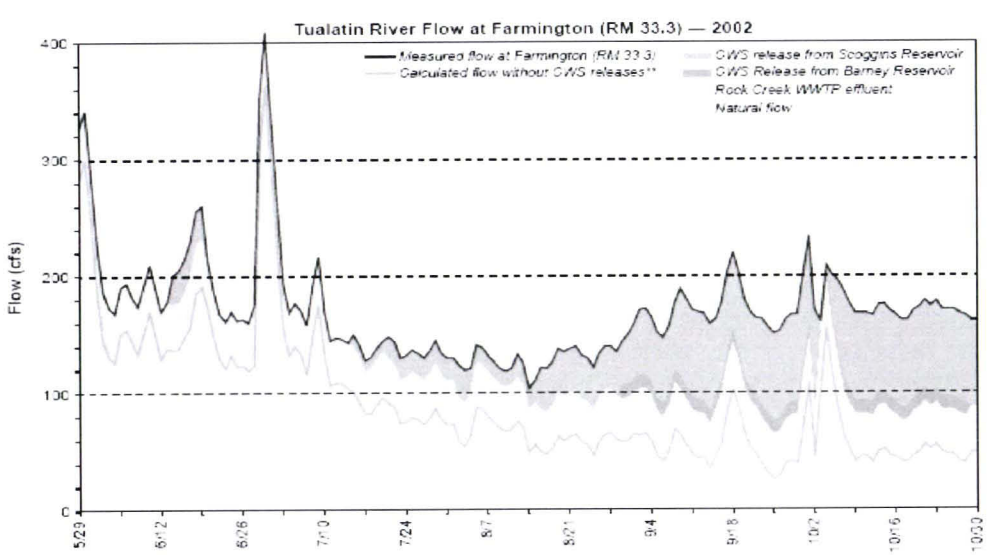

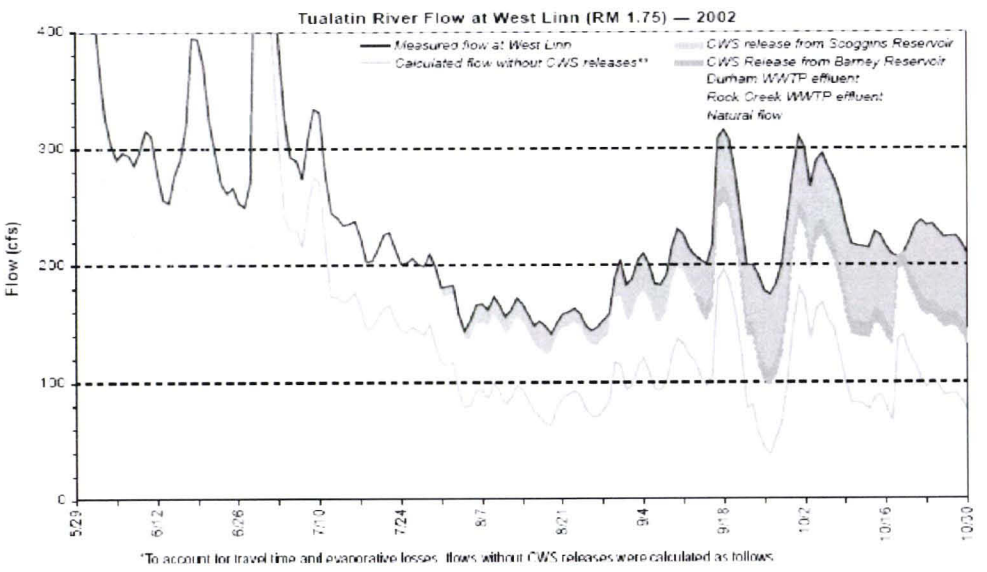

health. Part I: Healthy Streams Action Plan, identifies program concepts and priority projects for stream flow restoration, including water rights purchase or irrigation water exchange, near-stream floodplain recharge with winter floodwater storage and/or reclaimed water, and enforcement of water rights allocations. Further feasibility analysis of flow restoration options will be required before strategies are implemented. Table I-1 in Part I also provides options for improving stormwater quantity management to reduce the impacts of channel scour on streams.

River Flow

Historic modifications to the landscape and over-allocation of in-river water have significantly reduced the natural base flows of the Tualatin River. While the river has an average annual discharge of 1.1 million acre-feet of water, it yields less than 2 percent of its total annual discharge between June and September (Tualatin Water Supply Partners 2003). The timing and intensity of the rainy season, limited storage capacity, and summer water demands can result in inadequate summer flow, especially during low-rainfall years.

Regular monitoring of river flows began in the early 1970s. There are currently 11 flow gage stations on the mainstem of the Tualatin River, nine of which are continuous loggers (Clean Water Services 2002). Detailed information about directly measured flows in the Tualatin River Basin is available in the Tualatin River Flow Management Technical Committee Annual Report available on Clean Water Services' website (www.cleanwaterservices.org) and the Washington County Watermaster's website (www.co.washington.or.us/watermaster).

Barney Reservoir and Scoggins Reservoir were built to hedge against water supply shortages, low river flows, and flood damages. Clean Water Services purchased water rights in the reservoirs to help restore sufficient base flow during the summer months to maintain water quality. These water rights are needed because the river's hydrologic and geomorphic conditions limit its capacity to assimilate treatment plant effluent. Table II-11 shows the history of base flow augmentation to the Tualatin River. Figure II-17 shows that Clean Water Services' flow augmentation accounts for a significant fraction of the river's flow during the critical late summer and early fall period (Clean Water Services 2002).

Flow augmentation from Barney and Scoggins Reservoirs will continue as a method to help the river assimilate wastewater effluent. However, as the population of the basin continues to expand, treated effluent volumes will increase, and flow augmentation water from the reservoirs is likely to remain constant or decrease, especially in drought years. A decrease in the duration and benefit of flow augmentation would impact the water quality of the river. To address this potential future issue, the District is considering additional strategies to protect the water quality in the Tualatin River Basin. These include redistributing treated effluent or reclaimed water onto floodplains to provide near-stream recharge; irrigation water supply exchange; retirement of water rights; altering the input point of flow augmentation water or discharge point of effluent; increasing water supply availability at Scoggins; and diverting effluent to a larger water body (Clean Water Services 2004).

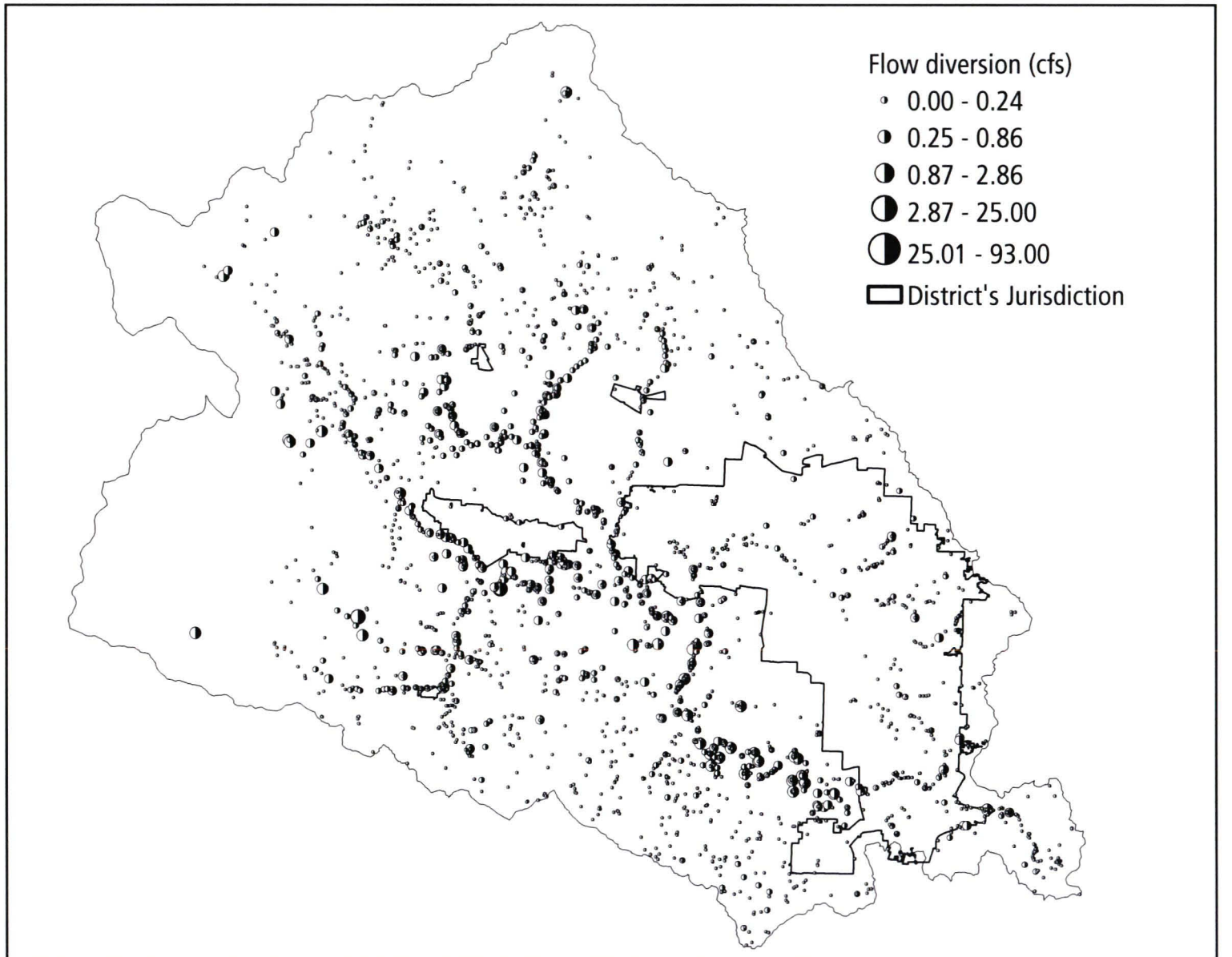

MAP II-4 Water Rights

Water Rights and Water Supply

Like most major river systems in the West, the Tualatin River and many of its tributaries are potentially over-allocated in any given year, depending on the amount of precipitation. The amount of available water supply and water rights dictate the allocation of limited water resources.

Figure II-18 *Estimated Peak Flows by River Mile*

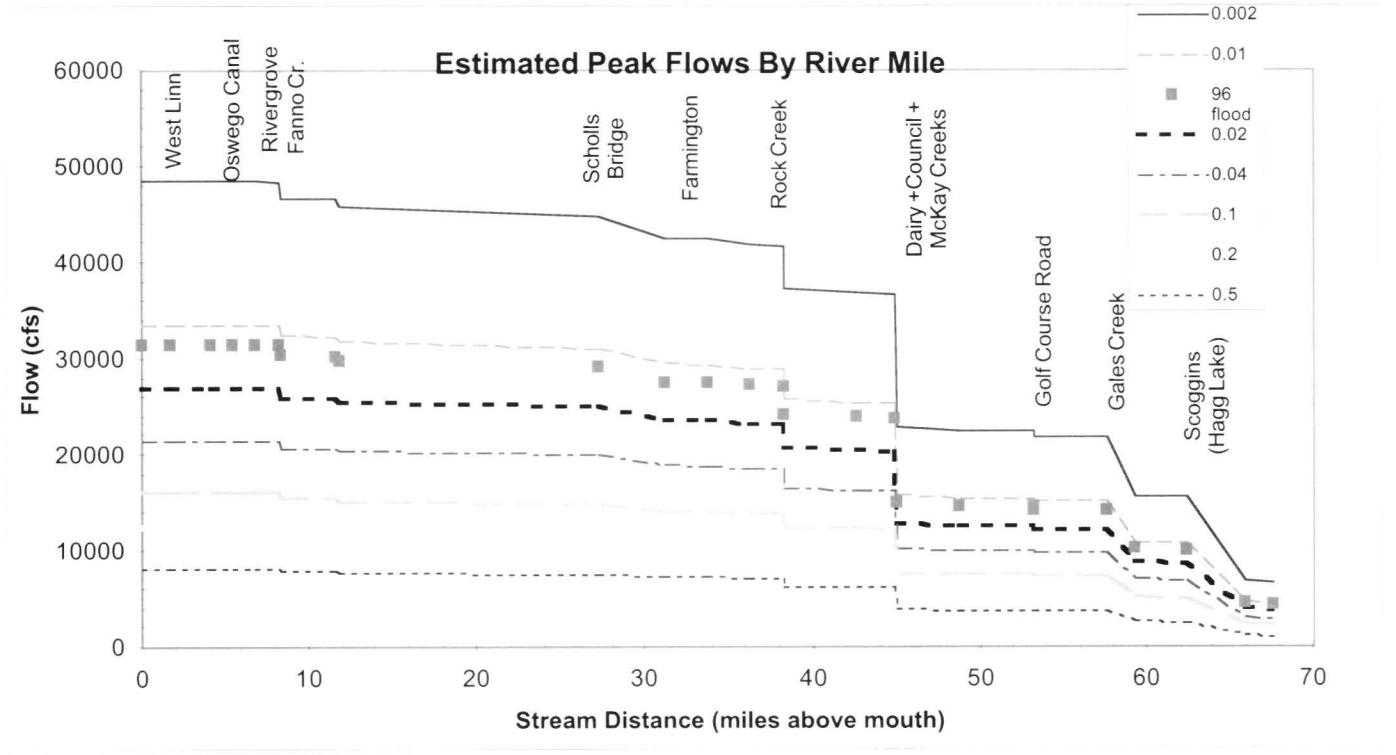

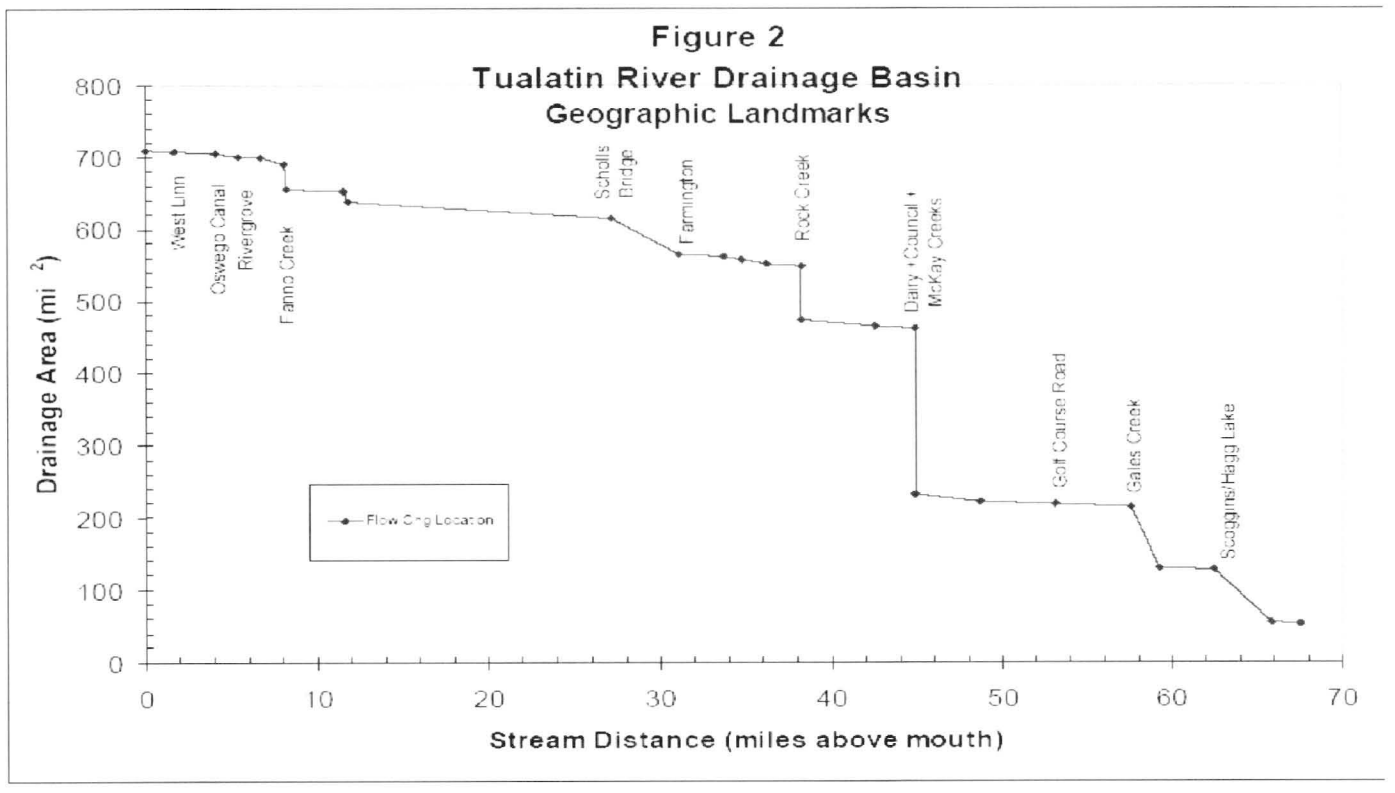

There are more paper water rights than available flow in the Tualatin Basin, but not all rights are exercised in any given year (Oregon Department of Water Resources 2004). No additional water rights are being issued during most months. Map II-4 shows the extent of water rights in the Tualatin River Basin. There are over 2,800 rights throughout the basin, accounting for 981 cubic feet per second (cfs) of flow. Water rights are limited within the urban growth boundary and more extensive in rural areas. Dairy, Gales, and McKay Creeks and the mainstem Tualatin River have the greatest volume of water rights in the system.

Sources of water to the basin are direct precipitation and water transfers from the Bull Run Watershed on Mt. Hood and the Trask River Watershed in the Coast Range. Water is actively stored in two main reservoirs, Scoggins (53,640 acre feet) and Barney (20,000 acre feet), and is consumed by municipalities (45,000 to 50,000 acre-feet from May through October) and irrigators (30,000 to 40,000 acre-feet from May through September for over 20,000 acres of cropland). Clean Water Services uses its 14,600 acre-feet of stored water from July through October to maintain in-river flow at 120 to 180 cfs during the summer and fall (Clean Water Services 2002). The Tualatin Basin Water Supply Feasibility Study is evaluating options for increasing the water storage by 45,000 acre-feet by 2050 via reservoir dam raises and pipelines (MWH 2004). The study is also reviewing the benefits of water conservation programs, reclaimed water use, aquifer storage and recovery, and additional supply from Bull Run to increase water supply.

Highly treated wastewater (reclaimed water) as a recycled source of water supply offers Clean Water Services considerable management challenges and opportunities. Wastewater treated by Clean Water Services at the Rock Creek and Durham Treatment Plants is discharged to the river at an average rate of 44 million gallons per day during the summer. The treated water makes up a majority of the total summer river flows (see Figure II-17) and has a lower nutrient content than the river. The discharge is a positive benefit to the river for diluting nutrients and for augmenting flow, which helps mitigate temperature and dissolved oxygen levels. Unfortunately, effluent temperature is higher than the river temperature at Rock Creek (Clean Water Services 2004). Clean Water Services is evaluating the redistribution of available water supply in the river and streams to protect water quality and aquatic habitat during the critical late summer and early fall. Part I: Healthy Streams Action Plan, outlines potential opportunities for active flow restoration, although further analysis of cost, benefit, and feasibility will be required via the recently initiated Reclaimed Water Master Plan effort.

Watershed Hydrology Modeling

The hydrology of the watershed was modeled to gain greater insight into the stream and river response to various-sized storm events. Hydrology models simulate the watershed patterns of converting rainfall to runoff. The flow information generated by hydrology models is used in the hydraulic models that simulate the surface water elevations of floods and flow velocities (see River-Stream Hydraulic Modeling section, below).

The peak stream flows were simulated using the Corps HEC-HMS (hydrologic modeling system) model. The flows for existing (2000) and future (2040) build-out scenarios were estimated for each subwatershed and stream reach in the study area for the 2-, 5-, 10-, 25-, 50-, 100-, and 500-year events. The models were calibrated to flow gages when adequate data were available. Additionally, the historic land survey of 1853 and estimated historic vegetation land cover from the Oregon Biodiversity Project (Defenders of Wildlife 1998) were used to model the likely historic flows of the streams. The historic information was used to assess the degree of change in the peak flows of the stream network.

The peak river flow estimates for the Tualatin River were updated using the Corps HEC-FFA (flood frequency analysis) for the period of record from 1929 to 1999 (Pacific Water Resources May 2003). The flood frequency analysis produced a few key findings. First, the flood of February 1996 was an 84-year flood for the Tualatin River, with a 1.2 percent annual probability of recurrence. Second, the gage data demonstrated that the flood storage capacity of the floodplain between Farmington and Rivergrove is important for protecting the cities of Tualatin and Lake Oswego. The peak flow rate at Farmington (river mile 33.3) for the February 1996 flood was nearly 90 percent of the flow rate at Rivergrove downstream (river mile 6.7). For most events observed in the range of 10,000 to 15,000 cubic feet per second (cfs) at Farmington, the observed flow at Rivergrove actually decreased. This suggests that preserving floodplain storage in areas upstream of downtown Tualatin and throughout the Sherwood area is critical to minimizing flood risk and damage further downstream. Figure II-18 shows the estimated peak flows by river mile and drainage area.

The modeled surface water flows for the Tualatin River and its major tributaries are available for use by local design engineers who implement stream-oriented projects such as culvert repairs, road crossings, or stream enhancement. Appendix E provides the complete modeling information, including methods, subbasin delineation, node points, and corresponding surface water flows.

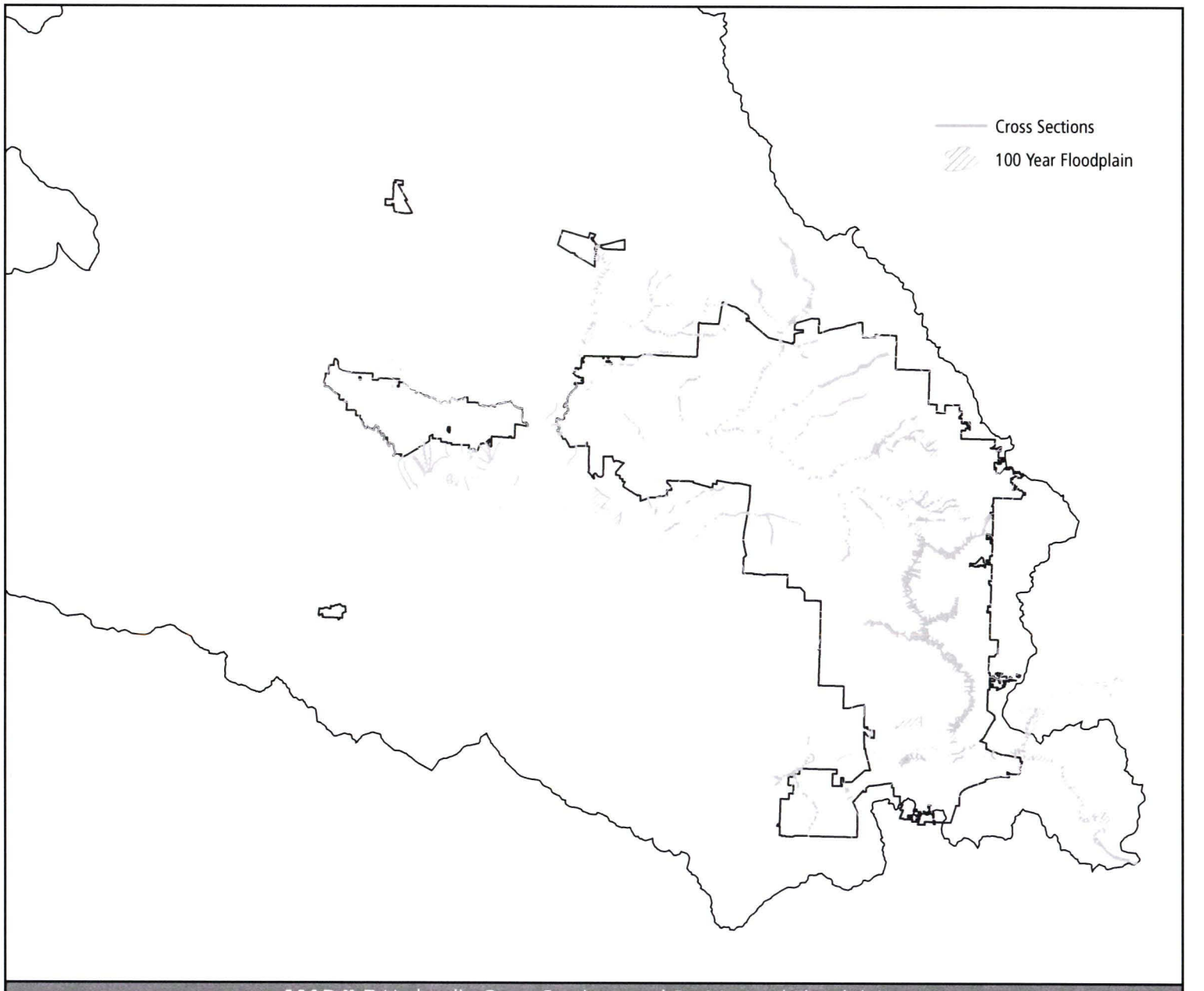

MAP II-5 Hydraulic Cross Sections and Re-Mapped Floodplains

River-Stream Hydraulic Modeling

Hydraulic modeling simulates water routing (velocities, surface water elevations, etc.) through the stream and river system. The hydraulic modeling was conducted on the river and streams to determine relative levels of flooding, assess hydraulic barriers to fish passage, improve the consistency in modeling method throughout the District, and streamline and reduce costs of future projects that require comprehensive hydraulic analysis. Upon completion of the modeling, FEMA requested the District update its floodplain maps based on the new information.

The hydraulics models provide surface water elevations for the 2-, 5-, 10-, 25-, 50-, 100-, and 500-year storm events at all node points, cross-sections, and structure crossings. The models were calibrated to gage data and elevations from the flood of 1996

Table II-12: *Sample of Surface Water Flows and Elevations for Select Streams*

	Water Surface Elevations (modeled under current development conditions)								Stream Peak Flows (modeled under current development conditions)						
Stream	Elevation	2 yr	5 yr	10 yr	25 yr	50 yr	100 yr	500 yr	2 yr	5 yr	10 yr	25 yr	50 yr	100 yr	500 yr
Ash	150.77			158.88		159.60	159.98	160.66							
Beaverton	126.05	142.11	143.04	143.57	144.24	144.67	145.11	146.13	2885	3739	4273	4990	5470	5967	7144
Bethany	162.20	168.16	168.22	168.25	168.30	168.33	168.35	168.44	252	323	367	423	462	500	593
Bronson	140.29	149.95	151.50	152.20	152.90	153.33	154.25	155.03	352	450	506	588	643	700	838
Butternut	116.89	132.80	134.40	135.50	136.90	139.20	140.80	144.30	454	587	670	778	848	920	1091
Cedar	125.42	136.08	137.32	137.96	136.97	137.49	137.89	138.85	499	660	744	818	863	909	1028
Cedar Mill	159.36	164.56	165.20	165.70	166.32	166.74	167.15	168.62	729	937	1050	1192	1289	1384	1588
Chicken	118.74	129.36	130.00	130.33	130.70	131.03	131.28	134.67	785	1006	1125	1291	1429	1580	1959
Council	125.60	145.19	146.89	147.91	151.78	152.42	153.07	157.99	719	951	1089	1690	1819	1952	3200
Dairy	110.80	141.22	142.89	143.77	147.09	147.76	148.43	150.18	10783	13480	15104	22237	23793	25396	29247
Dawson	128.12	137.84	138.81	139.43	141.79	142.59	143.09	144.69	404	526	601	693	755	819	976
Erickson	159.08	166.39	167.01	167.44	168.03	168.47	168.88	170.32	188	244	278	323	352	382	451
Fanno	99.37			119.78		125.13	127	130.53							
Gordon	114.54	133.69	135.74	137.04	138.82	140.42	141.92	143.01	110	137	153	173	186	199	229
Hall	163.80	174.24	175.49	176.44	177.15	177.39	177.55	177.77	452	614	720	843	923	1001	1179
Johnson South	159.53	166.23	166.74	167.11	167.58	167.95	168.26	169.47	384	501	571	662	723	785	931
McKay	115.30	144.52	146.18	147.10	150.92	151.80	152.56	154.60	10783	13480	15104	22237	23793	25396	29247
Nyberg	103.57	110.62	113.89	116.13	118.70	120.39	122.08	125.70	0	0	0	141	1191	3750	8559
Rock	109.64	135.10	137.75	139.43	141.79	142.59	143.09	144.69	4412	5686	6486	7581	8331	9115	10996
Rock South	101.59	119.10	122.21	124.58	127.66	128.75	130.78	134.61	372	481	547	635	697	760	929
Storey	156.60	161.10	161.28	161.40	161.84	161.93	162.01	162.83	275	349	396	609	657	706	1228
Summer	143.36			156.28		157.37	158	158.57							
Tualatin River	141.83	160.27	161.91	163.04	163.66	164.12	164.26	164.75	2700	4100	5200	7000	8700	10900	15700
Turner	120.52	135.10	137.75	139.43	141.79	142.59	143.09	144.69	210	273	312	362	397	431	512
Waible	155.20	159.56	159.84	160.60	160.88	160.93	161.01	161.28	388	495	561	844	906	967	1578
Willow	143.29	154.01	155.22	156.03	156.87	157.37	157.89	158.68	513	674	774	904	991	1080	1289

Table includes stream flows & water surface elevations modeled at mouth of streams

when this information was available. Map II-5 shows the extent of the hydraulics information and floodplain mapping. Table II-12 shows an example of the flows and corresponding surface water elevations for the Tualatin River and several major tributaries. The hydraulic barrier analysis for fish passage through structures is discussed in the section on culverts later in this chapter.

For the Tualatin River, the updated surface water elevations increased in the City of Tualatin and Lake Oswego. The current modeling results reflect 75 years of data that were included in the analysis, combined with updated hydraulics information on bridges and overbank areas. The updated information changed the 100-year, or 1 percent probability, flows and the corresponding surface water elevations. For the streams, the surface water elevations changed in several locations; the level of flooding was confirmed by flood damage records from the 1996 flood event.

The 100-year event surface water elevation was mapped to update the FEMA flood insurance rate maps (FIRM) in selected areas (see Map II-5). While some locations required significant adjustment to the floodplain elevations or boundaries, others had limited or no adjustments. Floodplain mapping was extended on stream systems that are experiencing significant urbanization, but lacked floodplain mapping, in order to provide planners, engineers, and property owners with accurate flood risk information.

A complete report on the methodology, model input and output data, and GIS maps and information related to all the water resource modeling for every studied tributary is available on the Clean Water Services website. Appendix E provides a summary of the model methods and results. The new floodplain maps will eventually be available directly from FEMA (anticipated by 2007) on its website (www.fema.gov) or from city and county planning/engineering departments. The floodplain mapping effort addressed a high-priority action item identified in Washington County's Natural Hazards Mitigation Plan (Washington County Emergency Management 2003).

Geomorphology

Geomorphology is the study of water's influence on the pattern, dimension, and profile of streams and rivers. The geomorphology of a stream channel in a healthy watershed is affected by the stream's location in the drainage network and the frequency, type, and intensity of natural disturbances such as floods and landslides. The processes of material delivery and routing are influenced by both hydrology and riparian vegetation (Naiman et al. 1992). Streams and rivers follow predictable patterns of adjustment resulting from changes in hydrology, sediment transport, and channel hydraulics. When assessing system health, it is helpful to understand the trajectory of the geomorphic adjustment (aggradation versus degradation, lateral versus bed scour incision)

Table II-13 *Major Reach Types of River and Streams*

Reach Type	Common Rosgen Classification	Description/√ision of Undisturbed Conditions
Type I Streams Low Gradient Headwaters	C 5-6	Low gradient headwaters are found in flat, or gently rolling hill landscapes. Undisturbed headwaters typically support mature ash and oak woodlands with a narrowly meandering channel or shallow flooded wet meadow wetlands with no defined channel. These areas often dry by late summer, when the drainage area is less than 50 acres. The system responds slowly to storm events as clean, clear groundwater seeps to the channel. The streambanks are stable and silt / clay soil dominated. These headwaters are good refugia for rearing resident fish and tree frogs, but not likely to directly support salmonids. The habitat is particularly important to bird species that utilize the prairies for feeding, and find cover and water in these landscape veins.
Type II Streams High Gradient Headwaters	A 1-6	High gradient headwaters are found in mountainous landscapes with V or U shaped valleys. Undisturbed headwaters typically support Douglas fir / western red cedar / western hemlock /red alder forests with a dense multi-layered canopy and ground cover. The streams meander tightly and may contain gravels, basalt outcroppings, and/or silt/clay bed materials. Large woody debris and step-pools dissipate the streams energy and promote a stable channel. The water is clean, cold groundwater that seeps into the stream from the surrounding watershed. Depending on the drainage area and geology, the stream may be perennial or intermittent. If gravels are present, and there is enough gradient to keep them clean and well oxygenated, than the spawning and rearing of salmonids is likely. Fishes main food source, macro invertebrates, are abundant. The stream and surrounding forest supports a diversity of amphibians, woodland birds, insects and mammals.
Type III Streams Moderate Gradient Transitions	B 1-6	Moderately gradient steam reaches are commonly located in the wide U shaped mid-valleys of the stream system, but may also be found intermittently in lower elevation reaches. Undisturbed mid valley areas typically support a mixture of forested, shrub/scrub and emergent wetlands, as will as diverse upland woodlands. The streams often meander the full width of the narrow floodplain. Pools, riffles, and backwater channels are common. The stream bed material is usually silt/clay, but may contain rock outcroppings and gravels. Large wood debris is common and provides for an active floodplain connection. Though commonly clear during the summer months, the water is often murky during the rainy season as the naturally occurring silts in the channel become suspended with greater flow volumes. Fish utilize the backwaters for shelter from high flows, and amphibians often occupy the backwater and floodplain areas throughout the year. Salmonids utilize this reach type for rearing, while some resident fish utilize it for all life stages. Riparian dependent migratory birds and a host of mammals can often be seen in the diverse riparian zone.
Type IV Streams Low Gradient Valley Bottom	E or F 6	Low gradient, floodplain dominated stream reaches are located in the valley floor of the watersheds. The floodplain is relatively flat, and small changes in elevation determine the dominance of shrub-scrub, emergent marsh, wet meadow, or forested wetland habitats. The stream meanders widely and is commonly lined with ash and oak woodlands. Former channel areas (oxbows) may be present and support a pond-like habitat away from the present stream. The stream channel is almost always silt/clay dominated and large woody debris jams are common. The debris jams create deep pools, localized bank erosion, and facilitate overbank flooding of the floodplain. Though clear to murky in the summer months, the water is often sediment rich during the rainy season, as the naturally occurring silts in the channel are transported and deposited with changing stream flows. The sediment deposited on the floodplain, adds nutrients and a media for new plant growth. Beaver activity has a major influence in this reach type, which results in an ever-changing hydrology. River otter commonly fish this stream reach type, utilizing the oxbow ponds that trap fish. Salmonids migrate through this reach type, while some resident fish and crayfish use it for complete lifecycles. The large extensive floodplain / wetland areas support a diversity of migratory and resident birds, as well as amphibians and mammals.
River Reach I High Gradient Mountain Headwaters River Mile 80-58	A 1-4	Forested, fast moving mountain streams with rock channels. Conditions similar to high gradient streams.
River Reach II Moderate Gradient Meander Transition River Mile 58-33	B or C 2-5	Transition from timberland to farmland, major floodwater storage, and log jams. Conditions similar to mid gradient streams.
River Reach III Low Gradient Reservior River Mile 33-3.4	F 6	Flat, reservior like flow with heavy sedimentation, recreational use and some large wood. Conditions similar to low gradient streams.
River Reach IV High Gradient Riffle to Confluence River Mile 3.4-0	G 1	Steep gradient segment of the river with short series of pools and riffles. Similar condition to stream segments transitioning to the river confluence.

Figure II-19

Typical Channel Morphology and Distrubance Regime of Pacific Northwest Costal Ecoregion Streams

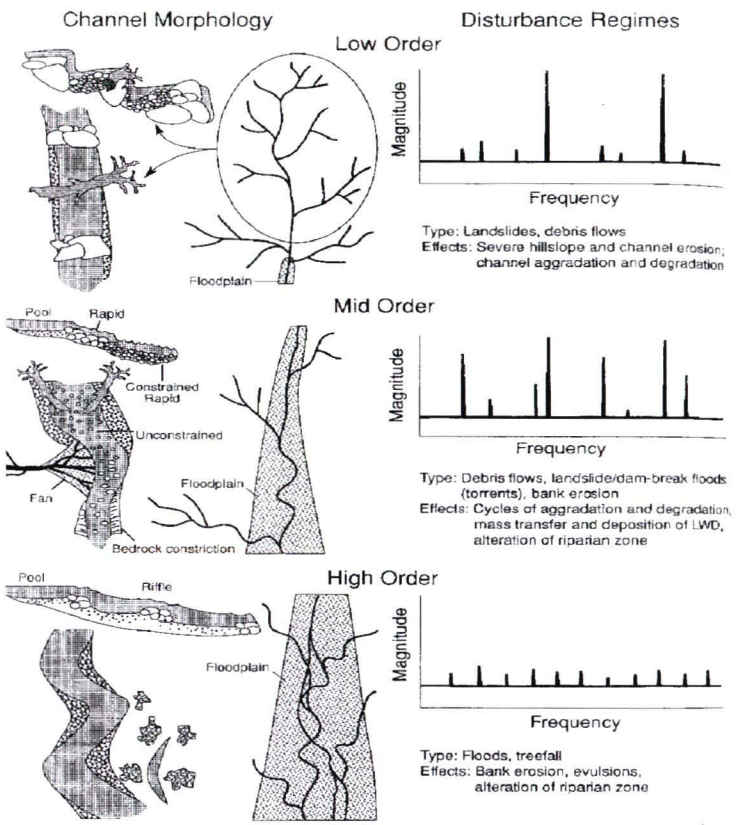

* Naiman 1992.

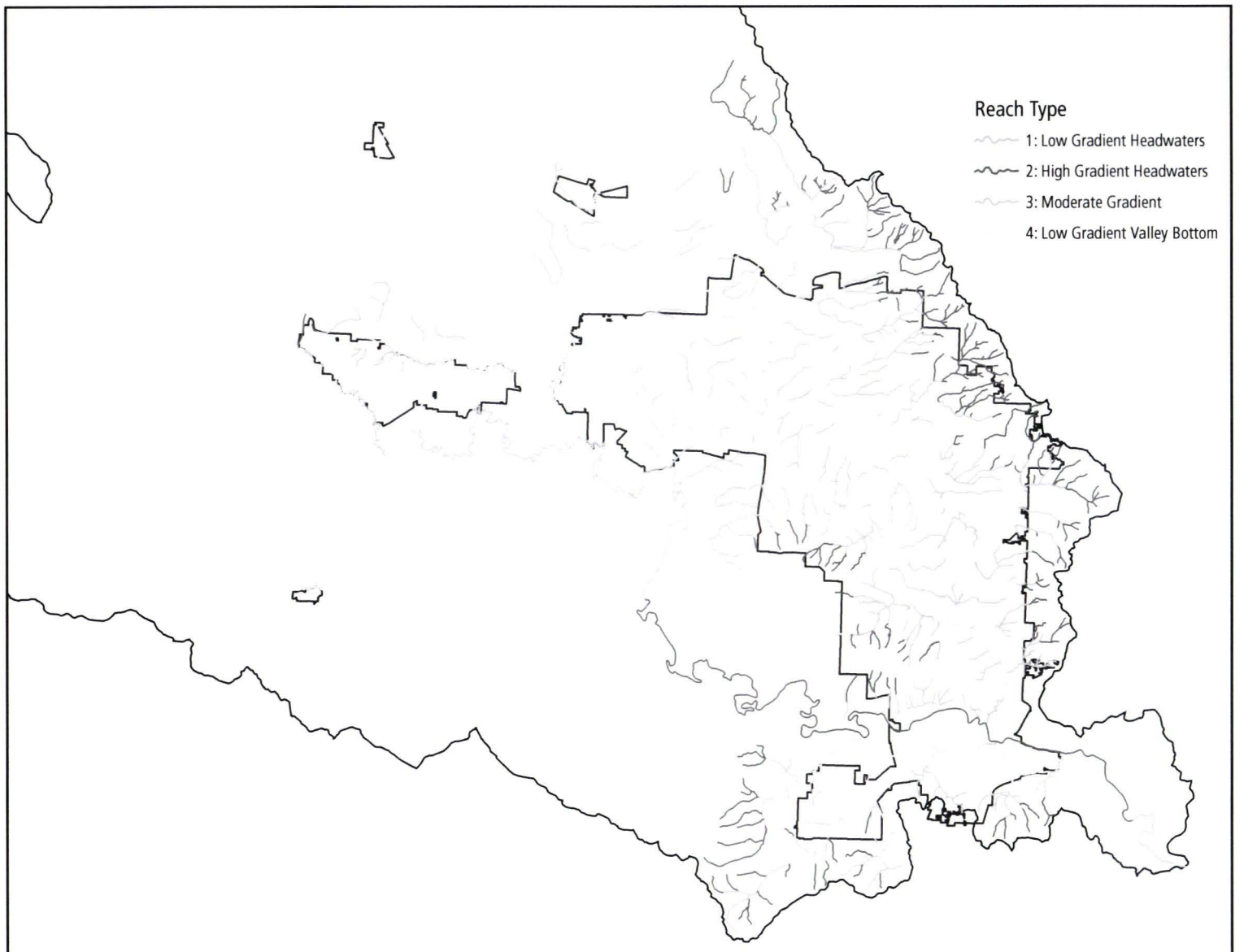

MAP II-6 Stream Types

(Rosgen 1996). The further the stream or river system has departed from its equilibrium state, the more difficult it will be to restore system health.

The detailed site geomorphic assessment of stream reaches included measurements of channel slope, bank full width, bank full depth, wetted width, pool-riffle ratio, floodplain width, channel meander width, bed material type, and woody debris presence, among other components (Clean Water Services 2000). Using the available RSAT field data, streams were later classified using the Rosgen Category II stream classification method (Rosgen 1996). The method classifies stream reaches based on width-to-depth ratio, channel slope, channel entrenchment, sinuosity, and bed materials. While the geomorphic information provided in this section is useful for watershed planning purposes, it is important to recognize that stream conditions and their classifications change over time. Consequently, a comprehensive geomorphic analysis should always be completed before any instream enhancement activity is implemented.

The Tualatin River is 84 miles long, with its headwaters residing in the southwestern edge of the basin, near Barney Reservoir. The river has the characteristics of a classic mountain stream in its headwaters: clear cool waters cascading over large boulders and gravels. Transitioning through the foothills, the river water gathers fine sediment from mixed soil/gravel banks, but retains a gravel bed. When the river reaches the valley floor, its channel consists entirely of dense clay, and its slope results in a tortuous meander pattern that drops less than 1 foot per mile. The water transports fine sediments and colloids from the river channel, giving the river a murky green/brown color. At approximately river mile 3.4, the river cascades over a basalt ledge as it flows to the Willamette River.

A majority of the larger streams of the Tualatin River Basin follow a geomorphic pattern similar to that of the river. Many of the streams have steep gradient headwaters dominated by rock streambeds, transitioning through moderately sloped and meandering foothills before flowing into a highly meandering, clay-dominated channel that drains to the river. Large woody debris is the principle factor in the geomorphology and character of aquatic habitats throughout the system. The pattern is similar to what Naiman and others (1992) identified as the typical channel morphology and disturbance regimes associated with the Pacific Northwest coastal ecoregion (Figure II-19). Some streams, however, do not match this pattern, particularly those that originate in the low foothills or the valley floor itself. These valley-floor streams have clay-dominated, low-gradient stream or wetland headwaters, with only modest meandering through open valley fields before gaining enough flow and slope to meander more significantly through u-shaped, wetland-dominated valleys as they make their way to larger tributaries.

Table II-13 describes the four major reach types of the Tualatin River (SRI et al. 1990) and tributary streams of the Tualatin River Basin. Map II-6 shows the extent of the reach types for the river and streams, and their Rosgen stream classification. A majority of the stream channels are classified as Rosgen channel type G, particularly those in urban or urbanizing areas. For the Tualatin River Basin, G channel types are not optimal because they have greater levels of incision and limited floodplain connectivity when compared to channel types A through E.

The predominance of streams with high entrenchment (F and G classifications) is not surprising, given the impacts that scouring stream flows and loss of large wood structure have on clay-based streams with dense grass cover along the banks. These streams are typically highly susceptible to channel bed erosion or degradation. This appears to be the case in the Tualatin Basin, where stream channel incision is generally a greater problem than active bank erosion.

Preservation or enhancement of geomorphic function is critical to preventing further stream degradation. Streams in less urbanized areas, with lower effective impervious area and more stable watershed hydrology, often have geomorphic characteristics closer to a state of dynamic equilibrium, where there is limited progressive adjustment in channel form. In the transition of a watershed from a natural state to a predominately urbanized condition, vegetation is removed, soil is compacted, and the drainage network is altered. When these landscape changes alter surface water runoff and sediment transport processes, a geomorphic response typically occurs that alters the cross-sectional geometry, channel morphology, plan form, and profile of the stream. Channel enlargement may occur through lateral erosion, increasing channel width, bed erosion, or overbank deposition or some combination of these mechanisms (Henshaw and Booth 2000). Fortunately, it has been observed that channels in the Pacific Northwest can (although not universally) restabilize within one to two decades if there is a stable, consistent watershed land use (Henshaw and Booth 2000). Watersheds that have been altered for decades, but have a consistent land use, may be good candidates for enhancement when the tendency towards restabilization is observed (such as in Fanno Creek).

A key factor in successful geomorphic recovery is large wood in the streams. However, the large wood commonly found in stable streams of the Pacific Northwest was not present or in sufficient abundance in Tualatin streams to promote a healthy geomorphic state. This is a limiting factor in the retention of gravels and in creating deep scour pools for channel stability and aquatic habitat. ODFW also noted the lack of instream wood during its habitat surveys (ODFW 1995 and 2002).

In many of the highly meandering valley-bottom streams, the erosion of the dense clay bed material is extremely difficult to reverse; consolidated clay that is disturbed or scoured is almost impossible to replace. The addition of rock and gravel to clay-based streams often results in accelerated erosion upstream and downstream of the application and causes further departure of the stream from equilibrium. Geomorphic management strategies must take into account the likely trajectory of channel change over time, the appropriateness of materials applied, and the proper placement of enhancement techniques.

Chapter 4: Projects, Programs, and Priorities, outlines techniques considered along different stream reaches to address geomorphic deviations. These include large wood placement, boulder placement, bioengineering, channel re-meandering, and off-channel habitat creation. Part I: Healthy Streams Action Plan, recommends stream enhancement projects that will protect or improve geomorphic functions.











The plant communities found along streams and wetlands are influenced by the water regime, soil conditions, and levels of disturbance, which in turn influence the habitat dynamics of the riparian corridor. The Tualatin River Basin has seven major plant communities. The vegetation in steeply sloped mountainous areas is dominated by headwater, riparian, and upland forest plant communities. The foothills contain mixed riparian forest and upland meadows, while the valley floor is predominantly forested wetlands, shrub-scrub wetlands, and wet meadow. Appendix E includes the common species list of plants found in each community type.

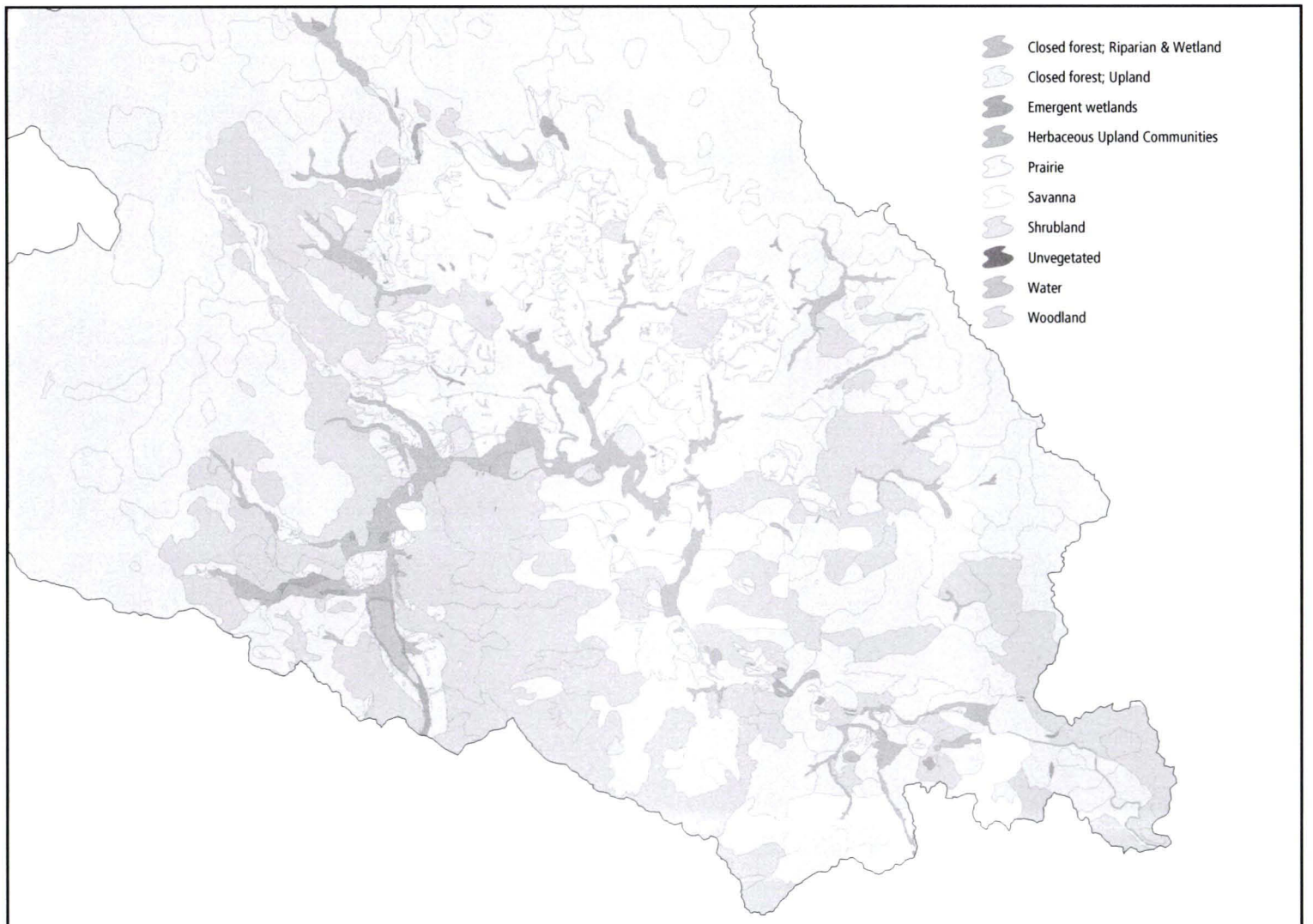

MAP II-7 Historic Vegetation

Figure II-20 *Plot of riparian widths against overall stream health*

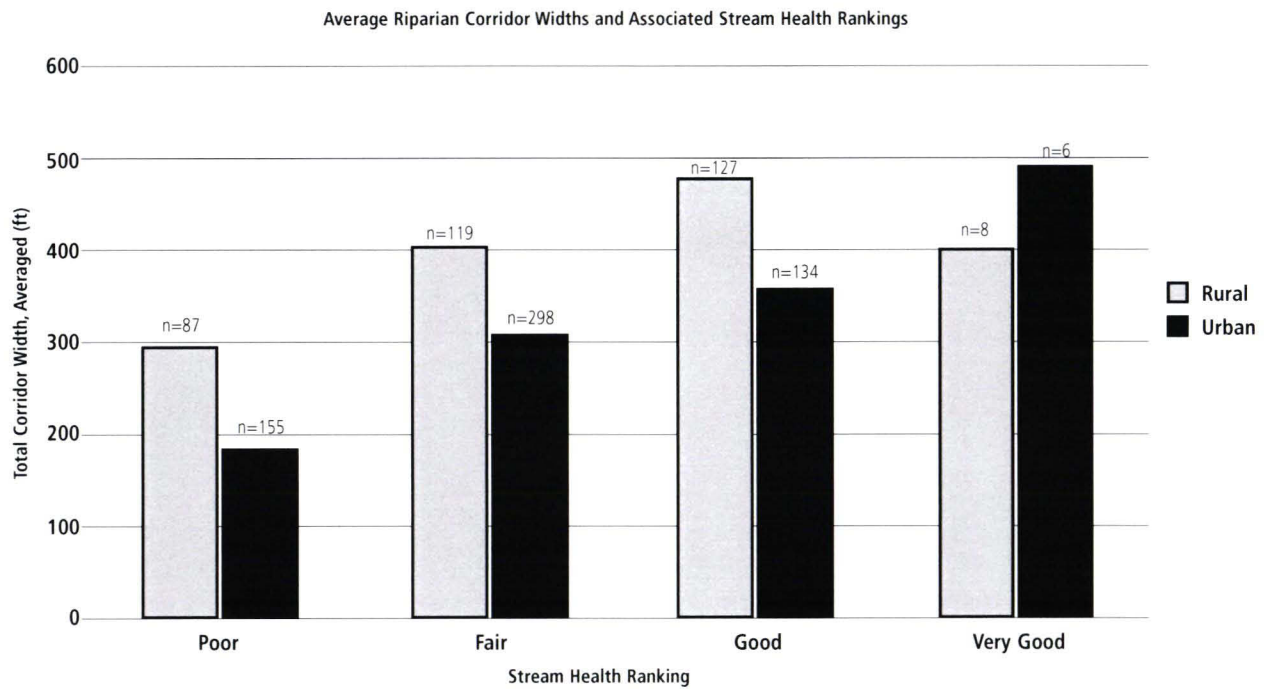

Riparian Vegetation

Riparian vegetation controls much of the environmental regime of streams (Franklin 1992). The quality, extent, and continuity of the riparian corridor and its native vegetation are critical to water quality, aquatic habitat condition, and aquatic and terrestrial species survival. Riparian areas extend from the edge of the average high water mark of the channel toward the uplands. They serve as nutrient filters and provide shade, structure, and food sources to streams. Healthy riparian areas create diverse aquatic habitats, moderate temperature and light to create microclimates, minimize erosion, and provide travel corridors for wildlife species (OSU 1993c.; Gregory et al. 1991; Naiman et al. 1992). The extent of the riparian corridor also influences the stability of the stream channel; most stable channels have intact natural riparian vegetation and can resist some non-native species invasion. The preservation of natural riparian corridors reduces the area of land cover that is modified, lessens hydrologic change in a watershed, and discourages direct channel destabilization and erosion (Henshaw and Booth 2000). Riparian vegetation width and condition, including floodplain wetlands that retain sediments and nutrients, can also influence the effectiveness of soluble phosphorous and nitrogen interception (OSU 1993c).

The riparian vegetation characteristics assessed during the RSAT data collection included stream canopy cover, invasive species, native species, ratios of tree/shrub/herbaceous materials, and plant community type. Data were also collected on the type and extent of encroachment and the future recruitment of large wood as influencing factors on riparian conditions. Historic vegetative cover and aerial photographs were reviewed to assess the potential causes of changed conditions over time. The past, present, and likely future vegetative conditions were evaluated, recognizing that some stream vegetation takes more time to adjust to changes in hydrology and geomorphology. The regeneration of native riparian vegetation over time is a good indicator of disturbance adjustments and/or possible system recovery.

The quality and quantity of vegetative cover in the Tualatin River Basin has changed dramatically since the mid-1800s, as shown on Map II-7. Historically, riparian forests formed a continuous mosaic of vegetation along the stream channels throughout large areas of valley lowlands (Naiman et al. 1992, from Sedell et al. 1988). From aerial photography during the 1930s to 1970s, it appears that riparian vegetation was regularly removed, reducing canopy cover and the availability of instream woody debris, which is a critical structural element of streams in the Pacific Northwest. Photographs from 1970 to 2000 show loss along utility lines and adjacent to development. In several of the aerial photographs, however, it appears that the canopy cover in the urban areas in 2000 is greater than it was previously when those areas were agricultural lands.

Riparian vegetation quality, corridor width, and connectivity are key indicators of stream health.

For streamsides, a diversity of herbaceous, shrub, and tree communities creates more complexity than zones dominated by a single vegetation type. The structural heterogeneity of riparian areas provides microhabitats and niches that in turn sustain a greater diversity of functions and organisms (Franklin 1992). Two measures of the quality of the riparian vegetation are the percent canopy cover and the percent of native to non-native species. Map II-8 shows the percent canopy cover, which was measured from the center of the stream and averaged from data collected facing four directions (north-south, east-west). Of the 338 miles evaluated, 183 miles had greater than 90 percent canopy cover. Areas with high canopy cover often have a greater percentage of native species and are likely to function better than corridors without canopy. Map II-9 shows the percentage of native and non-native species present along the sampled stream reach. Invasive plant species were observed at 476 of the 516 sampled sites. The presence of non-native species represents a significant threat to the native plant communities of the watershed and generally marks a decline of biodiversity (Defenders of Wildlife 1998). The lack of canopy cover and high percentage of non-native vegetation throughout much of the study area is cause for concern. It is critical to manage the spread of invasive species and enhance areas with the appropriate native plant community types to ensure project success and maintain or improve ecological functions.

The width of the riparian corridor is an important factor in preserving stream health. Riparian width was measured at the RSAT cross-section, not delineated as a boundary condition, and was assumed to represent the average corridor width of the reach. Total riparian corridor widths ranged from 6 to 508 feet (including the stream), with an average of 57 feet. When riparian corridor width was plotted against overall quality, the results showed that streams with wider riparian corridors tended to rate higher in quality (Figure II-20). These findings are consistent with studies in Puget Sound streams. Those studies found that the integrity of the riparian area available to buffer the aquatic community from negative influences in the watershed was (along with imperviousness) a key determinant of the system's biological condition (Horner et al. 1997).

Stream connectivity helps retain native vegetation and provides migration corridors for a wide range of aquatic and terrestrial species. The most common observation regarding connectivity and impacts to the riparian corridor was encroachment. In the urban areas, encroachment by property owners occurred on 48 percent (141 miles) of the surveyed streams. Such encroachments were typical in areas where development occurred before Clean Water Services implemented enhanced streamside buffer standards in 2001. In rural areas the riparian corridors are used for farming activities and logging. However, the linear connectivity in rural areas is often greater than in urban areas where road crossings and buildings impede connectivity. Encroachment and vegetative disturbance that impact the connectivity of corridors can reduce both habitat and water quality conditions.

Part I: Healthy Streams Action Plan, outlines opportunities for revegetation of the riparian corridor, non-native animal/plant management, and educational opportunities in various reaches of the study area. It recommends policy and program refinements for vegetated corridor standards and public education measures to address many of the encroachment and vegetation management issues identified during field observations.

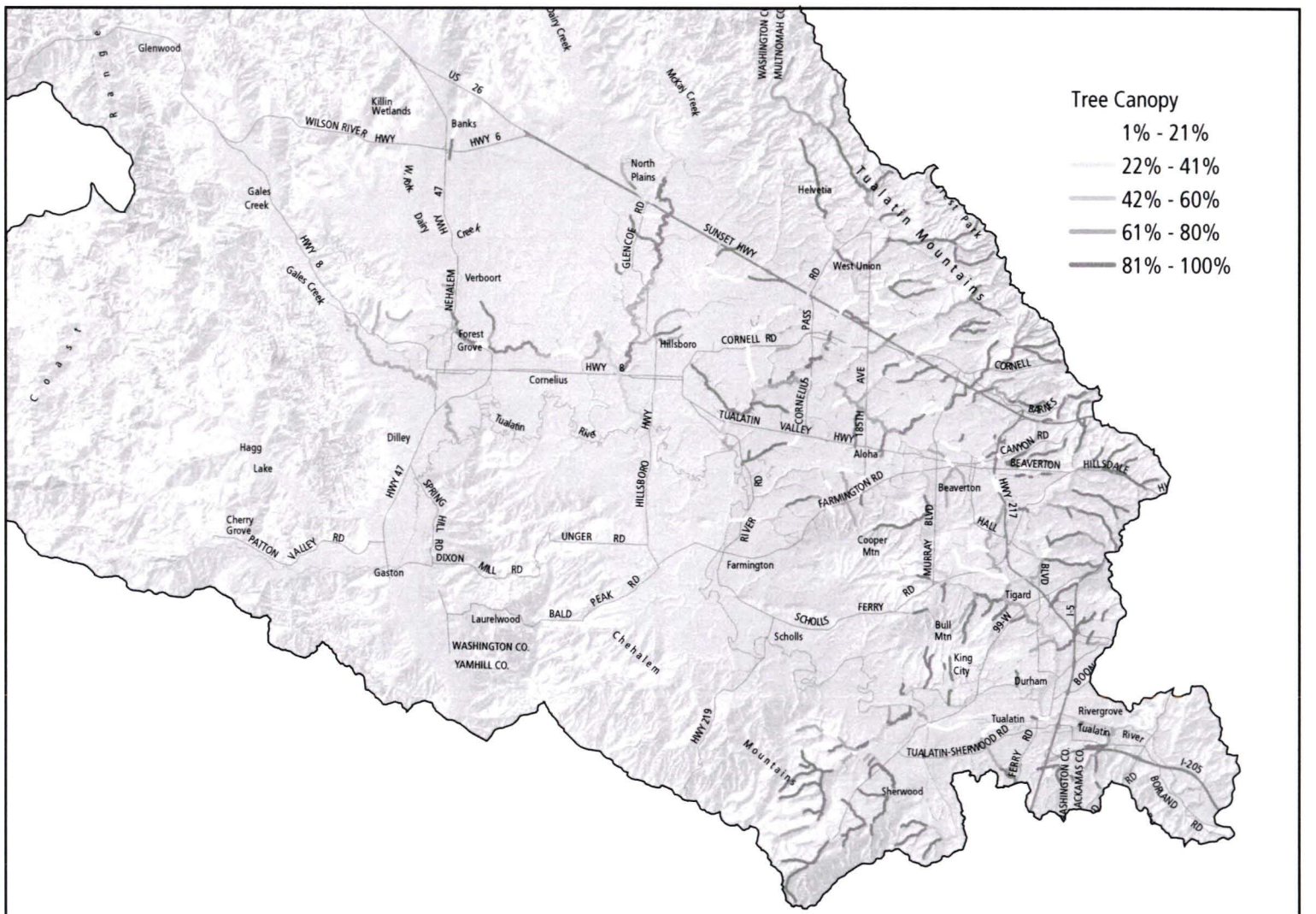

MAP II-8 Tree Canopy

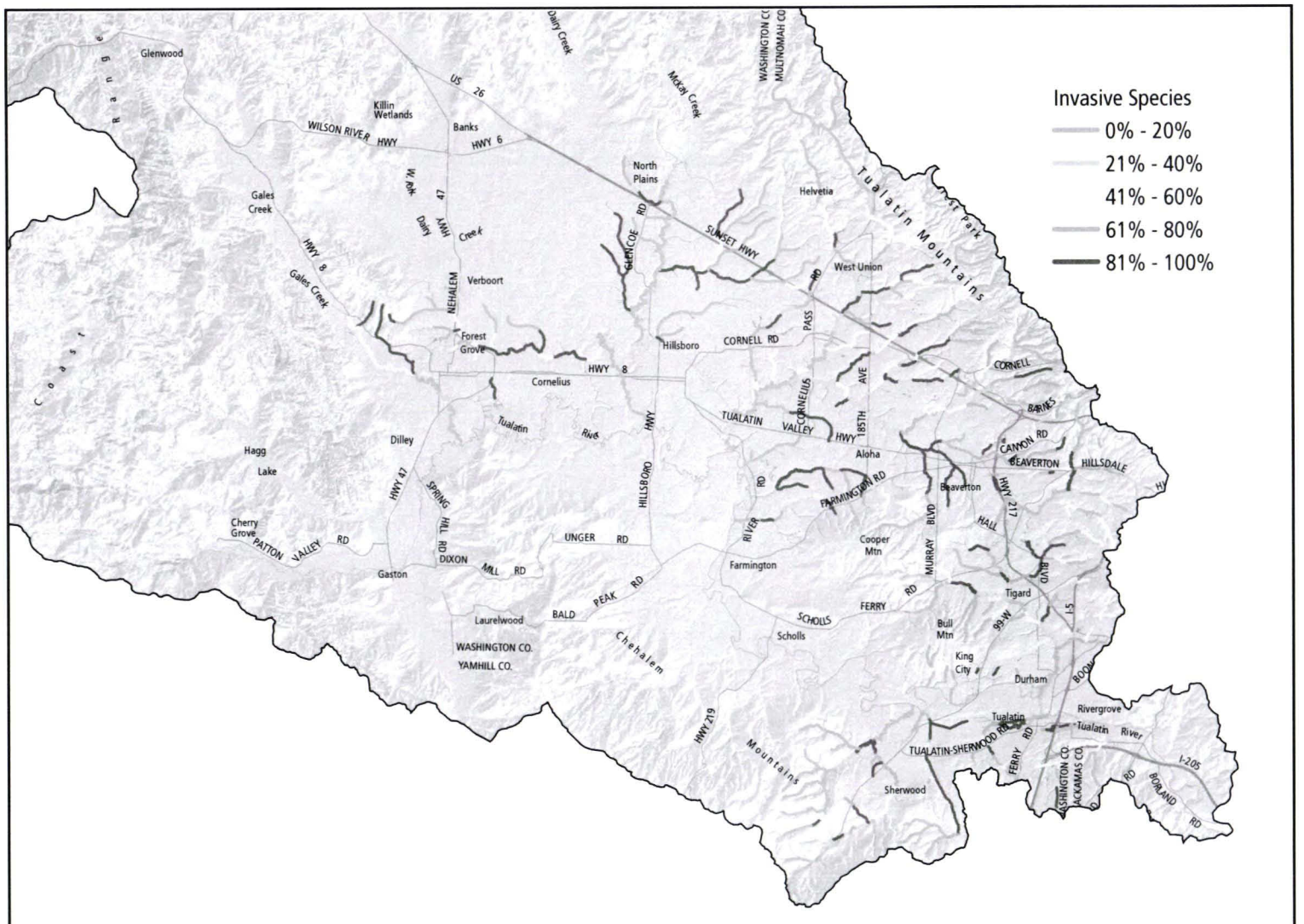

MAP II-9 Percent Invasive Species Present

Water Quality

Water quality is critical to understanding watershed health because it reflects many of the hydrologic, geomorphic, and biologic processes of the stream system. There is considerable temporal and spatial variability in water quality parameters. Even in ecologically healthy streams, a large number of controlling, unevenly distributed factors influence the system. Controlling factors that influence water quality include climate and atmospheric inputs, geology and soils, valley type, stream order, and vegetation. These factors respond directly or indirectly to forces of runoff, weathering, and erosion of the landscape, which in turn impact instream water quality (Naiman et al. 1992). Table II-14 shows the relative importance of these factors to different water quality elements. The five water quality parameters that provide an indication of ecologically healthy systems are nitrogen (nitrate nitrogen), phosphorus (phosphates), turbidity, temperature, and intra-gravel dissolved oxygen (Naiman et al. 1992). Because of the limited miles of gravel-dominated streams, the District focuses on dissolved oxygen and chemical oxygen demand in the water column rather than intra-gravel dissolved oxygen. The District also regularly tests for bacteria levels in the streams and river.

As part of the District's ongoing monitoring program, water quality has been intensely monitored in the Tualatin River since 1973 and in selected tributaries since 1975. Over the years, 120 water quality sampling sites have been established for various purposes along the streams and 20 sites along the river. Map II-10 shows the 81 ambient water quality monitoring sites currently operating in the Tualatin River Basin: 13 on the river and 68 on the tributary streams. Of these, 29 have recorded consistently since 1990. Clean Water Services monitors temperature, dissolved oxygen and chemical oxygen demand, pH, dissolved and suspended solids, ammonia and nitrates, phosphorus and algal growth, and bacteria at various sites.

The water quality trends and indices for the long-term monitoring stations indicate that water quality is generally improving, despite continued urbanization in the watershed (Aroner 2002). Improving or neutral water quality trends in urbanizing watersheds should be viewed with caution, however. The University of Washington found that water quality measures and concentration of metals in sediments did not change much over the urbanization gradient until imperviousness approached 50 percent (Horner et al. 1997). This implies that sediment quality does not follow the 10 percent imperviousness impact cited by Schuler (2000a). Only 1 percent of the watershed has reached at least 50 percent imperviousness.

Stream Water Quality

The Tualatin River Basin Tributary Water Quality Status and Trends Report 2001 (Aroner 2002) identified improvement in the summer water quality of tributary streams for 14 of the 18 sites evaluated for long-term (12 years) trending. Eight sites showed a statistically significant (90 percent confidence interval or higher) improvement. Only Chicken Creek exhibited a statistically significant (90 percent confidence interval) decreasing water quality trend.

The extremely below-average annual precipitation during water year 2001 resulted in lower base flows during the summer and fall and a reduction of transported loads of constituents such as total phosphorus and suspended solids. During this time, water temperatures were higher and dissolved oxygen concentrations were lower than in previous years. The water quality analysis drew the following conclusions:

- **The water temperature criterion was regularly exceeded on all the tributaries during the summer months. Statistically significant increasing temperature trends were identified at stations on Gales and Beaverton Creeks.**
- **Low dissolved oxygen levels were observed throughout the basin in 2001; however, increasing trends were detected at nine of 13 major tributary stations. Chemical oxygen**

demand was also decreasing at a majority of the 12 stations with long-term records.

- Ammonia was not found to be an issue in the tributary streams, with no exceedance of the drinking water criteria.
- Decreasing trends in total phosphorus and soluble orthophosphate occurred for 14 tributary stations, with the exception of lower Fanno Creek.
- High levels of E. coli bacteria continued to be measured throughout the streams.
- Application of Oregon's water quality index showed that the headwater sampling locations in more rural watersheds exhibited good to fair water quality, while most of the urban and mid- and lower-gradient sampling locations exhibited poor to very poor water quality. High levels of nutrients, total solids, bacteria, and dissolved oxygen most commonly caused the lower quality ratings.

Figure II-21 shows the monthly water quality index trends for Fanno, Rock, Beaverton, and Chicken Creeks.

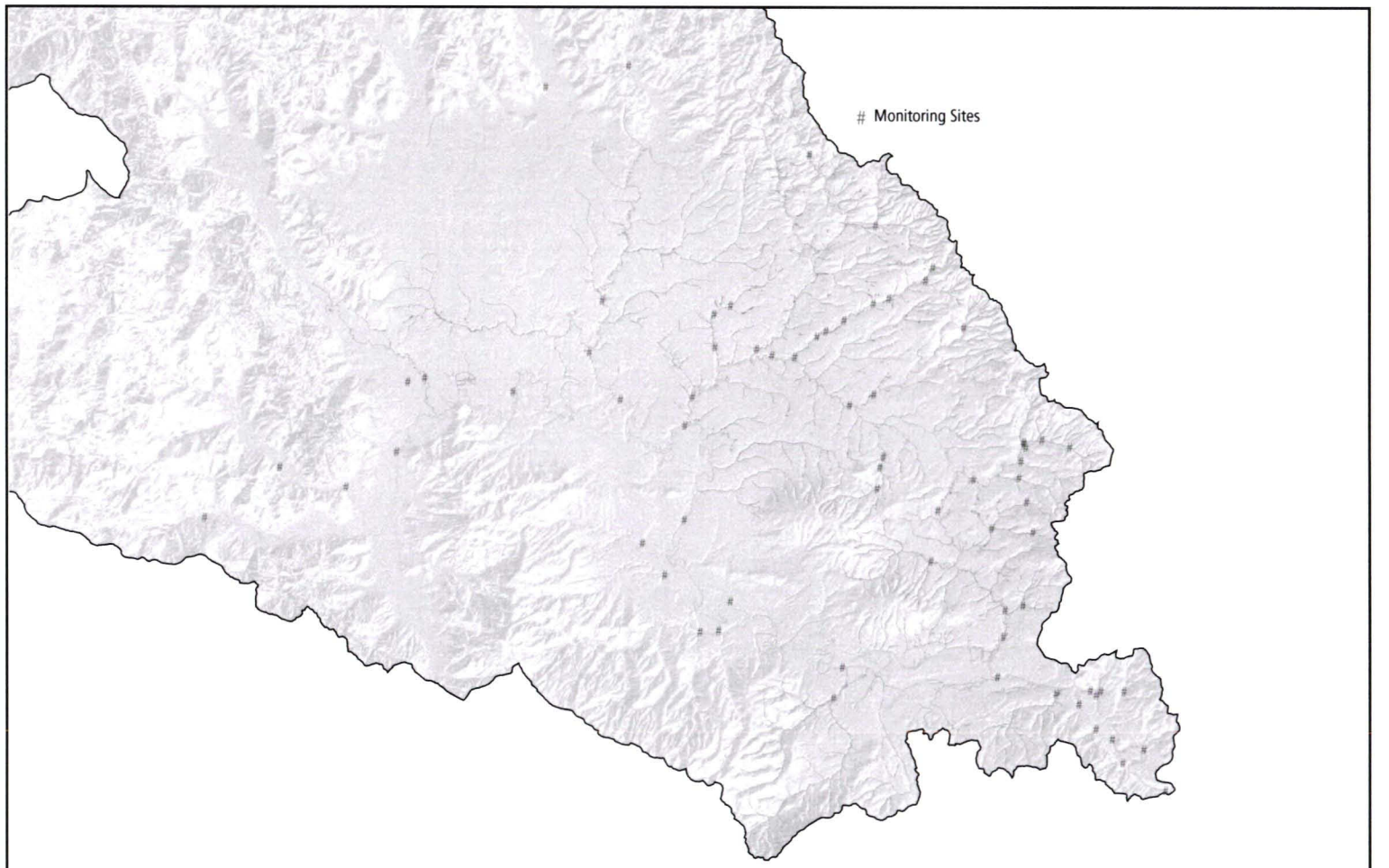

MAP II-10 Water Quality Monitoring Sites

River Water Quality

The Tualatin River Basin Water Quality Status and Trends Report 2001 indicated highly statistically significant (90 percent confidence interval and higher) and strongly improving water quality trends for dissolved oxygen, ammonia, ammonia toxicity, total phosphorus, and soluble orthophosphate in all mainstem stations below Rock Creek, despite the lower flows caused by the drought of 2001. No particular pattern of change was evident for mainstem stations above Rock Creek. Water year 2001 represented approximately a 70-year drought. The water quality analysis for 2001 drew the following conclusions:

- Flow augmentation from Barney and Scoggins Reservoirs helped prevent increases in water temperature, decreases in dissolved oxygen, and increases in algal growth.
- Highly significant decreasing trends for chemical oxygen demand continued to be evident for all mainstem monitoring sites for 1986-2001.
- Ammonia toxicity was not a problem in the river, except for a brief and minimum exceedance of the criteria below the Durham site. Total ammonia met total maximum daily load (TMDL) target concentrations. Nitrate observations were below drinking water standards.
- Total phosphorus was lower in 2001 than nearly all years since 1988. For years 1998-2001, estimated daily phosphorus loads for May to October were closer to the 1988 TMDL loading capacity than other years in the past several decades.
- Algal growth was higher in 2001 than in most years since 1996.
- E. coli levels remained high throughout the basin, with concentrations consistently lower in the mainstem than in the tributary streams.

Table II-14: *Relative Importance of Factors to Water Quality*

Water Quality Element					
Controlling Factor	**Nitrogen**	**Phosphorus**	**Turbidity**	**Temperature**	**Intragravel Dissolved Oxygen**
Climatic and atmospheric inputs	High	Low	Moderate	Low	
Geology and soils	Moderate	High	High	High	
Stream order / channel type	High	High	High	Moderate	Moderate
Vegetation	High	Moderate	Moderate	High	Low

Figure II-20 *Monthly Water Quality Index Trends*

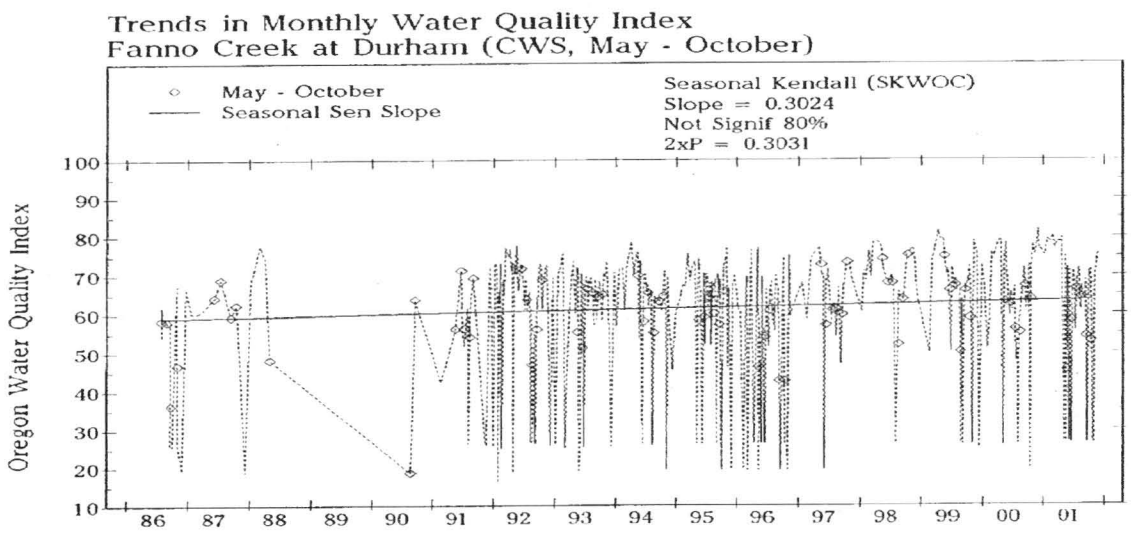

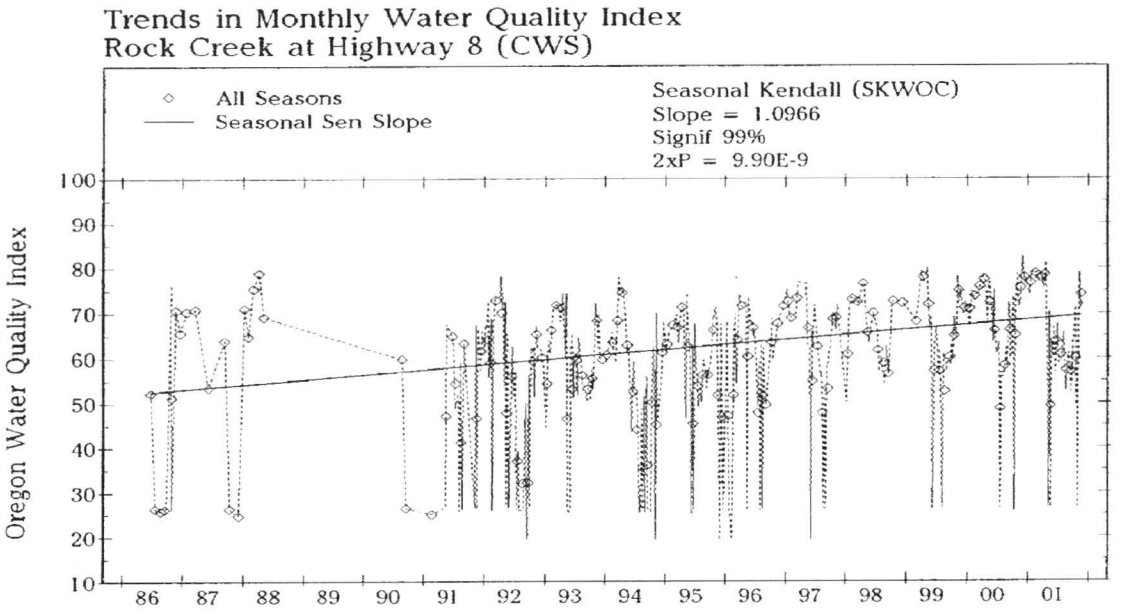

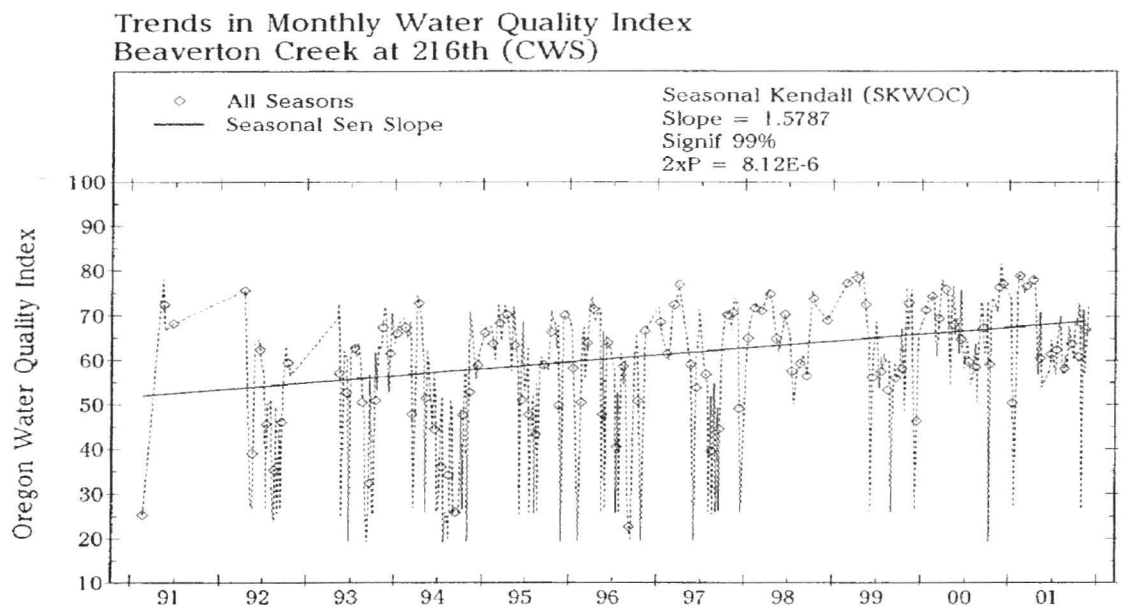

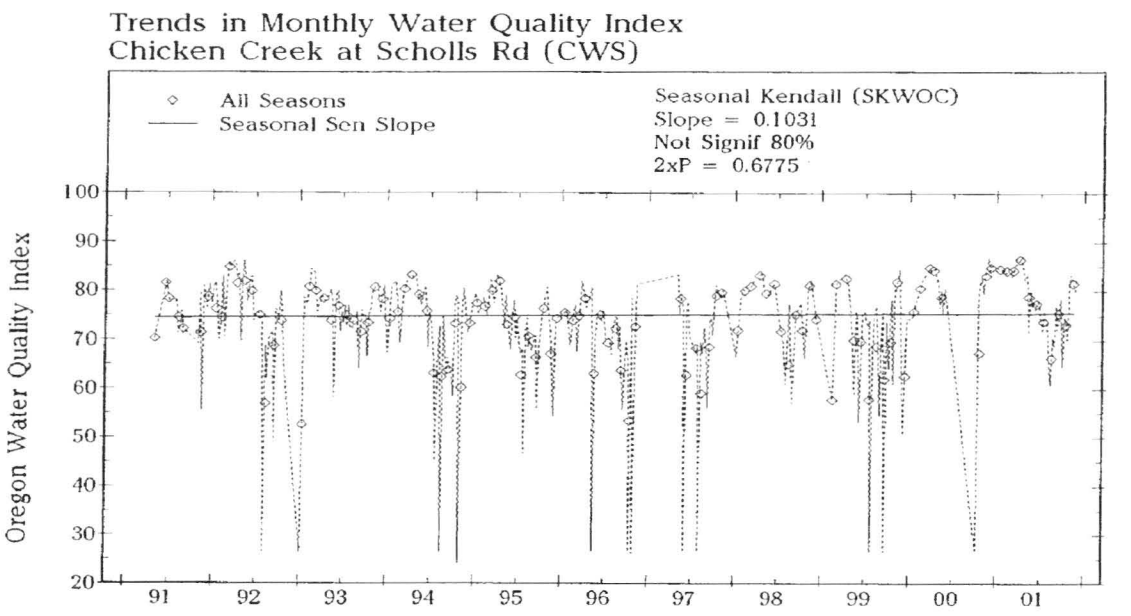

■ **Application of the Oregon water quality index showed that headwater stations exhibited excellent or good water quality, while most downstream mainstem segments exhibited poor to very poor water quality.**

A modified water quality index for sediment-based stream and river systems, which accounts for natural geologic conditions and their influence on water quality, may yield more favorable water quality rankings in the Tualatin River than the current Oregon water quality index.

Field observations during the summer and fall of 2000 and 2001 revealed that a majority of the streams lacked adequate stream flow and canopy cover. These physical characteristics influence stream temperature and dissolved oxygen levels. Altered sediment transport processes were observed on many streams; this is likely the result of changes in peak-flow hydrology and lack of instream structure (large wood). Substantial sediment deposition was observed in constructed instream ponds, while stream channels were commonly observed to be scoured down to bedrock, clay, or siltstone and lacking depositional point bars. The imbalance of sediment transport in the system can strongly influence total suspended sediment, sediment oxygen demand, and phosphorus levels instream (Clean Water Services 2004). Instream ponds have

Table II-15: *Fish and Wildlife species in the Metro Region*

Code1	Common Name	Genus/Species	Migratory Status2	Federal Status3	ODFW Status4	Riparian Assn.5
F	River Lamprey	Lampetra ayresi	A	SoC	None	XX
F	Western Brook Lamprey	Lampetra richardsoni	A	None	None	XX
F	Pacific Lamprey	Lampetra tridentata	A	SoC	SV	XX
F	White Sturgeon	Acipenser transmontanus	A	None	None	XX
F*	American Shad*	Alosa sapidissima	A	N/A - alien	N/A - alien	XX
F	Chiselmouth	Acrocheilus alutaceus	R	None	None	XX
F*	Goldfish*	Carassius auratus	R	N/A - alien	N/A - alien	XX
F*	Common Carp*	Cyprinus carpio	R	N/A - alien	N/A - alien	XX
F	Peamouth Chub	Mylocheilus caurinus	R	None	None	XX
F	Northern Pikeminnow (Squawfish)	Ptychocheilus oregonensis	R	None	None	XX
F	Longnose Dace	Rhynichthys cataractae	R	None	None	XX
F	Leopard Dace	Rhynichthys falcatus	R	None	None	XX
F	Speckled Dace	Rhynichthys osculus	R	None	None	XX
F	Redside Shiner	Richardsonius balteatus	R	None	None	XX
F	Largescale Sucker	Catostomus macrocheilus	R	None	None	XX
F*	Brown Bullhead*	Ameiurus nebulosus	R	N/A - alien	N/A - alien	XX
F	Coastal Cutthroat Trout, Upper Will. R. ESU	Oncorhynchus clarki clarki	A	SoC	None	XX
F	Coho Salmon, Upper Will R. ESU	Oncorhynchus kisutch	A	C	LE	XX
F	Rainbow Trout (resident populations)	Oncorhynchus mykiss	R	None	None	XX
F	Steelhead, Upper Willamette River ESU, winter run	Oncorhynchus mykiss	A	LT	SC	XX
F	Chinook Salmon, Upper Will. R spring run	Oncorhynchus tshawytscha	A	LT	None	XX
F	Mountain Whitefish	Prosopium williamsoni	R	None	None	XX
F	Sand Roller	Percopsis transmontanus	R	None	None	XX
F*	Mosquitofish*	Gambusia affinis	R	N/A - alien	N/A - alien	XX
F	Three-spined Stickleback	Gasterosteus aculeatus	R	None	None	XX
F	Prickly Sculpin	Cottus asper	R	None	None	XX
F	Reticulate Sculpin	Cottus perplexus	R	None	None	XX
F*	Green Sunfish*	Lepomis cyanellus	R	N/A - alien	N/A - alien	XX
F*	Pumpkinseed Sunfish*	Lepomis gibbosus	R	N/A - alien	N/A - alien	XX
F*	Warmouth*	Lepomis gulosus	R	N/A - alien	N/A - alien	XX
F*	Bluegill*	Lepomis macrochirus	R	N/A - alien	N/A - alien	XX
F*	Smallmouth Bass*	Micropterus dolomieu	R	N/A - alien	N/A - alien	XX
F*	Largemouth Bass*	Micropterus salmoides	R	N/A - alien	N/A - alien	XX
F*	White Crappie*	Pomoxis annularis	R	N/A - alien	N/A - alien	XX
F*	Black Crappie*	Pomoxis nigromaculatus	R	N/A - alien	N/A - alien	XX
F*	Yellow Perch*	Perca flavescens	R	N/A - alien	N/A - alien	XX
F*	Walleye*	Stizostedion vitreum vitreum	R	N/A - alien	N/A - alien	XX
F	Starry Flounder	Platichthys stellatus	R	None	None	XX
A	Northwestern Salamander	Ambystoma gracile	R	None	None	XX
A	Long-toed Salamander	Ambystoma macrodactylum	R	None	None	XX
A	Pacific Giant Salamander	Dicamptodon tenebrosus	R	None	None	XX
A	Cope's Giant Salamander	Dicamptodon copei	R	None	SU	XX
A	Columbia Torrent Salamander	Rhyacotriton kezeri	R	None	SC	XX
A	Cascade Torrent Salamander	Rhyacotriton cascadae	R	None	SV	XX
A	Rough-skinned Newt	Taricha granulosa	R	None	None	XX
A	Dunn's Salamander	Plethodon dunni	R	None	None	X
A	Western Red-backed Salamander	Plethodon vehiculum	R	None	None	X
A	Ensatina	Ensatina eschscholtzii	R	None	None	X
A	Clouded Salamander	Aneides ferreus	R	None	SU	
A	Oregon Slender Salamander	Batrachoseps wrighti	R	SoC	SU	X
A	Western Toad	Bufo boreas	R	None	SV	XX
A	Tailed Frog	Ascaphus truei	R	SoC	SV	XX
A	Pacific Chorus Frog (tree frog)	Hyla regilla	R	None	None	XX
A	Northern Red-legged Frog	Rana aurora aurora	R	SoC	SV/SU	XX
A*	Bullfrog*	Rana catesbeiana	R	N/A - alien	N/A - alien	XX
R*	Common Snapping Turtle*	Chelydra serpentina	R	N/A - alien	N/A - alien	XX
R	Painted Turtle	Chrysemys picta	R	None	SC	XX
R	Northwestern Pond Turtle	Clemmys marmorata marmorata	R	SoC	SC	XX
R*	Red-eared Slider*	Trachemys scripta elegans	R	N/A - alien	N/A - alien	XX
R	Northern Alligator Lizard	Elgaria coerulea	R	None	None	X
R	Southern Alligator Lizard	Elgaria multicarinata	R	None	None	X
R	Western Fence Lizard	Sceloporus occidentalis	R	None	None	
R	Western Skink	Eumeces skiltonianus	R	None	None	
R	Rubber Boa	Charina bottae	R	None	None	X
R	Racer	Coluber constrictor	R	None	None	
R	Sharptail Snake	Contia tenuis	R	None	SV	X
R	Ringneck Snake	Diadophis punctatus	R	None	None	X
R	Gopher Snake	Pituophis catenifer	R	None	None	
R	Western Terrestrial Garter Snake	Thamnophis elegans	R	None	None	X
R	Northwestern Garter Snake	Thamnophis ordinoides	R	None	None	X
R	Common Garter Snake	Thamnophis sirtalis	R	None	None	XX
B	Red-throated Loon	Gavia stellata	W / M	None	None	XX
B	Pacific Loon	Gavia pacifica	W / M	None	None	XX
B	Common Loon	Gavia immer	W / M	None	None	XX
B	Pied-billed Grebe	Podilymbus podiceps	S / N	None	None	XX
B	Horned Grebe	Podiceps auritus	W / M	None	SP	XX
B	Eared Grebe	Podiceps nigricollis	W	None	None	XX
B	Western Grebe	Aechmophorus occidentalis	W	None	None	XX
B	Clark's Grebe	Aechmophorus clarkii	W / M	None	None	XX
B	Doubled-crested Cormorant	Phalacrocorax auritus	R / S	None	None	XX
B	American Bittern	Botaurus lentiginosus	S / N	None	None	XX
B	Great Blue Heron	Ardea herodias	R	None	None	XX
B	Great Egret	Ardea alba	W / M	None	None	XX
B	Green Heron	Butorides virescens	N / S	None	None	XX
B	Black-crowned Night Heron	Nycticorax nycticorax	S	None	None	XX
B	Turkey Vulture	Cathartes aura	N	None	None	X
B	Greater White-fronted Goose	Anser albifrons	W / M	None	None	XX
B	Snow Goose	Chen caerulescens	W / M	None	None	XX
B	Ross's Goose	Chen rossii	W / M	None	None	XX
B	Canada Goose	Branta canadensis	VARIABLE	None	None	XX

Code1	Common Name	Genus/Species	Migratory Status2	Federal Status3	ODFW Status4	Riparian Assn.5
B	Dusky Canada Goose	Branta canadensis occidentalis	W / M	None	None	XX
B	Aleutian Canada Goose (wintering)	Branta canadensis leucopareia	W / M	LT	LE	XX
B	Trumpeter Swan	Cygnus buccinator	W / M	None	None	XX
B	Tundra Swan	Cygnus columbianus	W / M	None	None	XX
B	Wood Duck	Aix sponsa	S	None	None	XX
B	Gadwall	Anas strepera	W / M	None	None	XX
B	Mallard	Anas platyrhynchos	R	None	None	XX
B	Eurasian Wigeon	Anas penelope	W / M	None	None	XX
B	American Wigeon	Anas americana	W / M	None	None	XX
B	Blue-winged Teal	Anas discors	W / M	None	None	XX
B	Cinnamon Teal	Anas cyanoptera	N	None	None	XX
B	Northern Shoveler	Anas clypeata	W / M	None	None	XX
B	Northern Pintail	Anas acuta	W / M	None	None	XX
B	Green-winged Teal	Anas crecca	S	None	None	XX
B	Canvasback	Aythya valisineria	W / M	None	None	XX
B	Redhead	Aythya americana	W / M	None	None	XX
B	Ring-necked Duck	Aythya collaris	W / M	None	None	XX
B	Greater Scaup	Aythya marila	W / M	None	None	XX
B	Lesser Scaup	Aythya affinis	W / M	None	None	XX
B	Surf Scoter	Melanitta perspicillata	W / M	None	None	X
B	Harlequin Duck	Histrionicus histrionicus	W / M	SoC	SU	XX
B	Bufflehead	Bucephala albeola	W / M	None	SU	XX
B	Common Goldeneye	Bucephala clangula	M	None	None	XX
B	Barrow's Goldeneye	Bucephala islandica	W / M	None	SU	XX
B	Hooded Merganser	Lophodytes cucullatus	W / M	None	None	XX
B	Common Merganser	Mergus merganser	W / M	None	None	XX
B	Red-breasted Merganser	Mergus serrator	W / M	None	None	X
B	Ruddy Duck	Oxyura jamaicensis	W / M	None	None	XX
B	Osprey	Pandion haliaetus	N	None	None	XX
B	White-tailed Kite	Elanus leucurus	W / M	None	None	X
B	Bald Eaglea	Haliaeetus leucocephalus	S	LTa	LT	XX
B	Northern Harrier	Circus cyaneus	N	None	None	X
B	Sharp-shinned Hawk	Accipiter striatus	N	None	None	X
B	Cooper's Hawk	Accipiter cooperii	S	None	None	X
B	Northern Goshawk	Accipiter gentilis	W / M	SoC	SC	X
B	Red-shouldered Hawk	Buteo lineatus	?	None	None	X
B	Red-tailed Hawk	Buteo jamaicensis	S / N	None	None	X
B	Rough-legged Hawk	Buteo lagopus	W / M	None	None	X
B	American Kestrel	Falco sparverius	S	None	None	X
B	Merlin	Falco columbarius	W / M	None	None	X
B	American Peregrine Falcon	Falco peregrinus anatum	N	None	LE	X
B*	Ring-necked Pheasant*	Phasianus colchicus	R	N/A - alien	N/A - alien	X
B	Ruffed Grouse	Bonasa umbellus	R	None	None	XX
B	Blue Grouse	Dendragapus obscurus	R	None	None	X
B*	Wild Turkey*	Meleagris gallopavo	R	N/A - alien	N/A - alien	X
B	California Quail	Callipepla californica	R	None	None	X
B	Virginia Rail	Rallus limicola	R / S	None	None	XX
B	Sora	Porzana carolina	S / N	None	None	XX
B	American Coot	Fulica americana	R / S	None	None	XX
B	Lesser Sandhill Crane	Grus canadensis	W / M	None	None	XX
B	Black-bellied Plover	Pluvialis squatarola	M	None	None	X
B	American Golden-plover	Pluvialis dominica	W / M	None	None	X
B	Semipalmated Plover	Charadrius semipalmatus	M	None	None	XX
B	Killdeer	Charadrius vociferus	S / N	None	None	X
B	Greater Yellowlegs	Tringa melanoleuca	W / M	None	None	XX
B	Lesser Yellowlegs	Tringa flavipes	W / M	None	None	XX
B	Solitary Sandpiper	Tringa solitaria	W / M	None	None	XX
B	Spotted Sandpiper	Actitis macularia	N	None	None	XX
B	Semipalmated Sandpiper	Calidris pusilla	W / M	None	None	XX
B	Western Sandpiper	Calidris mauri	W / M	None	None	XX
B	Least Sandpiper	Calidris minutilla	W / M	None	None	XX
B	Baird's Sandpiper	Calidris bairdii	W / M	None	None	XX
B	Pectoral Sandpiper	Calidris melanotos	W / M	None	None	XX
B	Dunlin	Calidris alpina	W / M	None	None	XX
B	Short-billed Dowitcher	Limnodromus griseus	W / M	None	None	X
B	Long-billed Dowitcher	Limnodromus scolopaceus	W / M	None	None	XX
B	Common Snipe	Gallinago gallinago	S / N	None	None	XX
B	Wilson's Phalarope	Phalaropus tricolor	W / M	None	None	XX
B	Red-necked Phalarope	Phalaropus lobatus	W / M	None	None	X
B	Bonaparte's Gull	Larus philadelphia	M / W	None	None	XX
B	Mew Gull	Larus canus	W / M	None	None	XX
B	Ring-billed Gull	Larus delawarensis	W / M	None	None	XX
B	California Gull	Larus californicus	S	None	None	XX
B	Herring Gull	Larus agentatus	W / M	None	None	XX
B	Thayer's Gull	Larus thayeri	W / M	None	None	XX
B	Western Gull	Larus occidentalis	R / S	None	None	X
B	Glaucous Gull	Larus hyperboreus	W / M	None	None	XX
B	Glaucous-winged Gull	Larus glaucescens	W / M	None	None	XX
B	Caspian Tern	Sterna caspia	N	None	None	XX
B	Forster's Tern	Sterna forsteri	M	None	None	XX
B	Common Tern	Sterna hirundo	W / M	None	None	X
B*	Rock Dove*	Columba livia	R	N/A - alien	N/A - alien	
B	Band-tailed Pigeon	Columba fasciata	S	SoC	None	XX
B	Mourning Dove	Zenaida macroura	S	None	None	XX
B	Barn Owl	Tyto alba	R / S	None	None	X
B	Western Screech-Owl	Otus kennicottii	R	None	None	X
B	Great Horned Owl	Bubo virginianus	R	None	None	X
B	Northern Pygmy-Owl	Glaucidium gnoma	R	None	SC	X
B	Barred Owl	Strix varia	R	None	None	X
B	Long-eared Owl	Asio otus	W / M	None	None	X

Code1	Common Name	Genus/Species	Migratory Status2	Federal Status3	ODFW Status4	Riparian Assn.5
B	Short-eared Owl	Asio flammeus	W / M	None	None	XX
B	Northern Saw-whet Owl	Aegolius acadicus	R / S	None	None	X
B	Common Nighthawk (nearly extirpated)	Chordeiles minor	N	None	SC	X
B	Vaux's Swift	Chaetura vauxi	N	None	None	XX
B	Anna's Hummingbird	Calypte anna	R	None	None	X
B	Rufous Hummingbird	Selasphorus rufus	N	None	None	X
B	Belted Kingfisher	Ceryle alcyon	S	None	None	XX
B	Acorn Woodpecker	Melanerpes formicivorus	R	SoC	None	
B	Red-breasted Sapsucker	Sphyrapicus ruber	S	None	None	X
B	Downy Woodpecker	Picoides pubescens	R	None	None	XX
B	Hairy Woodpecker	Picoides villosus	R	None	None	X
B	Northern Flicker	Colaptes auratus	R	None	None	X
B	Pileated Woodpecker	Dryocopus pileatus	R	None	SV	X
B*	Monk Parakeet*	Myiopsitta monachus	R	N/A - alien	N/A - alien	XX
B	Olive-sided Flycatcher	Contopus cooperi (= borealis)	N	SoC	SV	X
B	Western Wood-Pewee	Contopus sordidulus	N	None	None	X
B	Willow Flycatcher (western OR race)	Empidonax traillii brewsteri	N	None	SV	XX
B	Hammond's Flycatcher	Empidonax hammondii	N	None	None	
B	Dusky Flycatcher	Empidonax oberholseri	M	None	None	X
B	Pacific-slope Flycatcher	Empidonax dificilus	N	None	None	X
B	Say's Phoebe	Sayornis saya	N	None	None	
B	Western Kingbird	Tyrannus verticalis	N	None	None	
B	Northern Shrike	Lanius excubitor	W / M	None	None	X
B	Cassin's Vireo	Vireo cassinii	N	None	None	
B	Hutton's Vireo	Vireo huttoni	R / S	None	None	X
B	Warbling Vireo	Vireo gilvus	N	None	None	XX
B	Red-eyed Vireo	Vireo olivaceus	N	None	None	XX
B	Steller's Jay	Cyanocitta stelleri	R	None	None	X
B	Western Scrub-Jay	Aphelocoma californica	R	None	None	X
B	Gray Jay	Perisoreus canadensis	R	None	None	X
B	American Crow	Corvus brachyrhynchos	R	None	None	X
B	Common Raven	Corvus corax	R	None	None	X
B	Streaked Horned Lark	Eremophila alpestris strigata	S	SoC	SC	
B	Purple Martin	Progne subis	N	SoC	SC	XX
B	Tree Swallow	Tachycineta bicolor	N	None	None	XX
B	Violet-green Swallow	Tachycineta thalassina	N	None	None	X
B	Northern Rough-winged Swallow	Stelgidopteryx serripennis	N	None	None	XX
B	Cliff Swallow	Petrochelidon pyrrhonota	N	None	None	XX
B	Barn Swallow	Hirundo rustica	N	None	None	XX
B	Black-capped Chickadee	Poecile atricapilla	R	None	None	X
B	Mountain Chickadee	Poecile gambeli	W / M	None	None	X
B	Chestnut-backed Chickadee	Poecile rufescens	R	None	None	X
B	Bushtit	Psaltriparus minimus	R	None	None	X
B	Red-breasted Nuthatch	Sitta canadensis	R	None	None	X
B	White-breasted Nuthatch	Sitta carolinensis	R	None	None	X
B	Brown Creeper	Certhia americana	R	None	None	X
B	Bewick's Wren	Thryomanes bewickii	R	None	None	X
B	House Wren	Troglodytes aedon	N	None	None	X
B	Winter Wren	Troglodytes troglodytes	R	None	None	X
B	Marsh Wren	Cistothorus palustris	N	None	None	XX
B	American Dipper	Cinclus mexicanus	R / S	None	None	XX
B	Golden-crowned Kinglet	Regulus satrapa	R	None	None	X
B	Ruby-crowned Kinglet	Regulus calendula	W / M	None	None	X
B	Western Bluebird	Sialia mexicana	S	None	SV	
B	Townsend's Solitaire	Myadestes townsendi	W / M	None	None	X
B	Swainson's Thrush	Catharus ustulatus	N	None	None	X
B	Hermit Thrush	Catharus guttatus	S	None	None	X
B	American Robin	Turdus migratorius	S	None	None	X
B	Varied Thrush	Ixoreus naevius	W / M	None	None	
B*	European Starling*	Sturnus vulgaris	R / S	N/A - alien	N/A - alien	XX
B	American Pipit	Anthus rubescens	W / M	None	None	X
B	Cedar Waxwing	Bombycilla cedrorum	S	None	None	X
B	Orange-crowned Warbler	Vermivora celata	N	None	None	X
B	Nashville Warbler	Vermivora ruficapilla	N	None	None	X
B	Yellow Warbler	Dendroica petechia	N	None	None	XX
B	Yellow-rumped Warbler	Dendroica coronata	S	None	None	X
B	Black-throated Gray Warbler	Dendroica nigrescens	N	None	None	XX
B	Townsend's Warbler	Dendroica townsendi	S / N	None	None	X
B	Hermit Warbler	Dendroica occidentalis	N	None	None	X
B	MacGillivray's Warbler	Oporornis tolmiei	N	None	None	X
B	Common Yellowthroat	Geothlypis trichas	N	None	None	XX
B	Wilson's Warbler	Wilsonia pusilla	N	None	None	XX
B	Yellow-breasted Chat	Icteria virens	N	SoC	SC	XX
B	Western Tanager	Piranga ludoviciana	N	None	None	X
B	Spotted Towhee	Pipilo maculatus	R	None	None	X
B	Chipping Sparrow	Spizella passerina	N	None	None	X
B	Oregon Vesper Sparrow	Pooecetes gramineus affinis	S / N	SoC	SC	
B	Savannah Sparrow	Passerculus sandwichensis	S / N	None	None	X
B	Fox Sparrow	Passerella iliaca	W / M	None	None	X
B	Song Sparrow	Melospiza melodia	R	None	None	X
B	Lincoln's Sparrow	Melospiza lincolnii	S / N	None	None	XX
B	Swamp Sparrow	Melospiza georgiana	W / M	None	None	XX
B	White-throated Sparrow	Zonotrichia albicollis	W / M	None	None	
B	Harris's Sparrow	Zonotrichia querula	W / M	None	None	
B	White-crowned Sparrow	Zonotrichia leucophrys	S	None	None	X
B	Golden-crowned Sparrow	Zonotrichia atricapilla	R	None	None	X
B	Dark-eyed Junco	Junco hyemalis	S	None	None	X
B	Black-headed Grosbeak	Pheucticus melanocephalus	N	None	None	X
B	Lazuli Bunting	Passerina amoena	N	None	None	X
B	Red-winged Blackbird	Agelaius phoeniceus	S	None	None	XX
B	Tricolored Blackbird	Agelaius tricolor	S	SoC	SP	XX
B	Yellow-headed Blackbird	Xanthocephalus xanthocephalus	N	None	None	XX
B	Brewer's Blackbird	Euphagus cyanocephalus	S	None	None	X
B	Brown-headed Cowbird	Molothrus ater	S / N	None	None	X
B	Bullock's Oriole	Icterus bullockii	N	None	None	XX
B	Purple Finch	Carpodacus purpureus	S	None	None	XX
B	House Finch	Carpodacus mexicanus	R	None	None	X
B	Red Crossbill	Loxia curvirostra	R / S	None	None	X
B	Pine Siskin	Carduelis pinus	S	None	None	X
B	Lesser Goldfinch	Carduelis psaltria	S	None	None	XX
B	American Goldfinch	Carduelis tristis	S	None	None	X
B	Evening Grosbeak	Coccothraustes vespertinus	W / M	None	None	X
B*	House Sparrow*	Passer domesticus	R	N/A - alien	N/A - alien	
M*	Virginia Opossum*	Didelphis virginiana	R	N/A - alien	N/A - alien	X
M	Vagrant Shrew	Sorex vagrans	R	None	None	X
M	Pacific Water Shrew	Sorex bendirii	R	None	None	XX
M	Water Shrew	Sorex palustris	R	None	None	XX
M	Trowbridge's Shrew	Sorex trowbridgii	R	None	None	X
M	Shrew-mole	Neurotrichus gibbsii	R	None	None	X
M	Townsend's Mole	Scapanus townsendii	R	None	None	X
M	Coast Mole	Scapanus orarius	R	None	None	X
M	Yuma Myotis	Myotis yumanensis	R / S	SoC	None	XX
M	Little Brown Myotis	Myotis lucifugus	R / S	None	None	X
M	Long-legged Myotis	Myotis volans	R / S	SoC	SU	X
M	Fringed Myotis	Myotis thysanodes	R / S	SoC	SV	X
M	Long-eared Myotis	Myotis evotis	R / S	SoC	SU	X
M	Silver-haired Bat	Lasionycteris noctivagans	L	SoC	SU	X
M	Big Brown Bat	Eptesicus fuscus	R / S	None	None	X
M	Hoary Bat	Lasiuris cinereus	L	None	None	X
M	Pacific Western Big-eared Bat	Corynorhinus townsendii townsendii	R / S	SoC	SC	XX
M	Brush Rabbit	Sylvilagus bachmani	R	None	None	X
M*	Eastern Cottontail*	Sylvilagus floridanus	R	N/A - alien	N/A - alien	X
M	Mountain Beaver	Aplodontia rufa	R	None	None	XX
M	Townsend's Chipmunk	Tamias townsendii	R	None	None	X
M	California Ground Squirrel	Spermophilus beecheyi	R	None	None	
M*	Eastern Fox Squirrel*	Sciurus niger	R	N/A - alien	N/A - alien	
M*	Eastern Gray Squirrel*	Sciurus carolinensis	R	N/A - alien	N/A - alien	
M	Western Gray Squirrel	Sciurus griseus	R	None	SU	
M	Douglas' Squirrel	Tamiasciurus douglasii	R	None	None	
M	Northern Flying Squirrel	Glaucomys sabrinus	R	None	None	X
M	Camas Pocket Gopher	Thomomys bulbivorus	R	SoC	None	
M	American Beaver	Castor canadensis	R	None	None	XX
M	Deer Mouse	Peromyscus maniculatus	R	None	None	XX
M	Bushy-tailed Woodrat	Neotoma cinerea	R	None	None	X
M	Western Red-backed Vole	Clethrionomys californicus	R	None	None	X
M	Heather Vole	Phenacomys intermedius	R	None	None	X
M	White-footed Vole	Arborimus (= Phenacomys) albipes	R	SoC	SU	XX
M	Red Tree Vole	Arborimus (= Phenacomys) longicaudus	R	SoC	None	X
M	Gray-tailed Vole	Microtus canicaudus	R	None	None	
M	Townsend's Vole	Microtus townsendii	R	None	None	XX
M	Long-tailed Vole	Microtus longicaudus	R	None	None	XX
M	Creeping Vole	Microtus oregoni	R	None	None	X
M	Water Vole	Microtus richardsoni	R	None	None	X
M	Common Muskrat	Ondatra zibethicus	R	None	None	XX
M*	Black Rat*	Rattus rattus	R	N/A - alien	N/A - alien	
M*	Norway Rat*	Rattus norvegicus	R	N/A - alien	N/A - alien	
M*	House Mouse*	Mus musculus	R	N/A - alien	N/A - alien	
M	Pacific Jumping Mouse	Zapus trinotatus	R	None	None	XX
M	Common Porcupine	Erethizon dorsatum	R	None	None	XX
M*	Nutria*	Myocastor coypus	R	N/A - alien	N/A - alien	XX
M	Coyote	Canis latrans	R	None	None	X
M	Red Fox	Vulpes vulpes	R	None	None	X
M	Gray Fox	Urocyon cinereoargenteus	R	None	None	X
M	Black Bear	Ursus americanus	S	None	None	X
M	Common Raccoon	Procyon lotor	R	None	None	XX
M	Ermine	Mustela erminea	R	None	None	X
M	Long-tailed Weasel	Mustela frenata	R	None	None	X
M	Mink	Mustela vison	R	None	None	XX
M	Striped Skunk	Mephitis mephitis	R	None	None	X
M	Western Spotted Skunk	Spilogale gracilis	R	None	None	X
M	Northern River Otter	Lontra canadensis	R	None	None	XX
M	Mountain Lion (Cougar)	Puma concolor	S	None	None	X
M	Bobcat	Lynx rufus	S	None	None	X
M*	Domestic Cat (feral)*	Felis domesticus	R	N/A - alien	N/A - alien	N/A
M	Roosevelt Elk	Cervus elaphus roosevelti	S	None	None	X
M	Mule Deer	Odocoileus hemionus	R	None	None	X

Key to Notations
* Indicates species that are non-native (also known as alien or introduced) to Metro region.

1 Code (type of animal)
A = Amphibians; B=Birds; F=Fish; M=Mammals; R=Reptiles

2 Migratory Status (indicates trend for the majority of a given species in the Metro region):
A = Anadromous (fish; lives in the ocean, spawns in fresh water)
C = Catadromous (fish; lives in fresh water, spawns in the ocean)
M = Migrates through area without stopping for long time periods
N = Neotropical migratory species (birds; majority of individuals breeding in the Metro region migrate south of U.S./Mexico border for winter)

R = Permanent resident (lives in the area year-round)
S = Short-distance migrant (from elevational to regional migration, e.g., across several states)
W = Winters in the Metro region

3 Federal Status is based on current Endangered Species Act listings. E = Endangered, T = Threatened. Endangered taxa are those which are in danger of becoming extinct within the foreseeable future throughout all or a significant portion of their range. Threatened taxa are those likely to become endangered within the foreseeable future.

LE = Listed Endangered. Taxa listed by the U.S. Fish and Wildlife Service (USFWS) or the National Marine Fisheries Service (NMFS) as Endangered under the Endangered Species Act (ESA), or by the Departments of Agriculture (ODA) and Fish and Wildlife (ODFW) of the state of Oregon under the Endangered Species Act of 1987 (OESA).
LT = Listed Threatened. Taxa listed by the USFWS, NMFS, ODA, or ODFW as Threatened.
PE = Proposed Endangered. Taxa proposed by the USFWS or NMFS to be listed as Endangered under the ESA or by ODFW or ODA under the OESA.

PT = Proposed Threatened. Taxa proposed by the USFWS or NMFS to be listed as Threatened under the ESA or by ODFW or ODA under the OESA.

C = Candidate taxa for which NMFS or USFWS have sufficient information to support a proposal to list under the ESA, or which is a candidate for listing by the ODA under the OESA.

SoC = Species of Concern. Former C2 candidates which need additional information in order to propose as Threatened or Endangered under the ESA. These are species which USFWS is reviewing for consideration as Candidates for listing under the ESA.

4 ODFW Status (state status) is based on current Oregon Department of Fish and Wildlife "Oregon Sensitive Species List," 2001. See Federal Status (above) for definitions of LT and LE.

SC (Critical) = Species for which listing as threatened or endangered is pending; or those for which listing as threatened or endangered may be appropriate if immediate conservation actions are not taken. Also considered critical are some peripheral species which are at risk throughout their range, and some disjunct populations.
SV (Vulnerable) = Species for which listing as threatened or endangered is not believed to be imminent and can be avoided through continued or expanded use of adequate protective measures and monitoring. In some cases the population is sustainable, and protective measures are being implemented; in others, the population may be declining and improved protective measures are needed to maintain sustainable populations over time.

SP (Peripheral or Naturally Rare) = Peripheral species refer to those whose Oregon populations are on the edge of their range. Naturally rare species are those which had low population numbers historically in Oregon because of naturally limiting factors. Maintaining the status quo for the habitats and populations of these species is a minimum requirement. Disjunct populations of several species which occur in Oregon should not be confused with peripheral.
SU (Undetermined Status). Animals in this category are species for which status is unclear. They may be susceptible to population decline of sufficient magnitude that they could qualify for endangered, threatened, critical or vulnerable status, but scientific study will be required before a judgement can be made.

been identified as a major point-source water quality problem because of their tendency to increase stream temperature, decrease dissolved oxygen, and alter sediment transport processes (Kurahashi and Associates 1996; Creech 2003).

Part I: Healthy Streams Action Plan, identifies projects that will help:

- **Increase base flow through flow restoration and dispersion of stormwater runoff.**
- **Increase canopy cover through revegetation.**
- **Balance sediment transport processes by improving stormwater quantity management, implementing enhancement projects that replace large wood, and re-meandering channels to help restore geomorphic function to the streams.**
- **Remove constructed instream ponds that impact water quality and impede fish passage.**

Fish and Wildlife

In ecologically healthy watersheds, the interactions between hydrology, geomorphology, and riparian vegetation produce habitat for aquatic and terrestrial species (Naiman et al. 1992). Compared with many other urban and suburban areas in the Pacific Northwest, the Tualatin River Basin has open connected stream corridors that support abundant and diverse fish and wildlife populations. The Tualatin River and its major streams continue to support anadromous steelhead trout, cutthroat trout, and other resident fish (ODFW 2001 and 2002). Migratory and resident birds, mammals, reptiles, amphibians, and insects use the watershed and its water resources (Metro 2001 and 2002). Special status species in the Tualatin River Basin include the Upper Willamette steelhead trout (Oncorhynchus mykiss) and Chinook salmon (Oncorhynchus tshawytscha), listed as threatened under the Endangered Species Act since 1999, and the bald eagle (Haliaeetus leucocephalus). Table II-15 lists the species likely to be or known to be present in the Tualatin Basin.

Watersheds that support dynamic animal populations, productivity, and diversity are heavily influenced by quality and quantity of riparian forests, variability of habitat, and migratory connectivity of the habitats (Naiman et al. 1992). Clean Water Services' regulations for vegetated corridors provide protection of riparian areas for the benefit of water quality, quantity, and aquatic species. Local jurisdictions also manage habitat impacts through the requirements of statewide planning goal 5.

Metro, local parks providers, Clean Water Services, and non-profit land trusts hold a majority of the public open spaces/greenspaces/habitat of the Tualatin River Basin within the urban growth boundary and the urban fringe. Of the 10 square miles of public open space inside the urban growth boundary, 7 square miles contain stream corridors and floodplains, providing important migration corridors for fish and wildlife. The remaining 3 square miles are predominantly manicured parks; undisturbed upland habitat represents a small fraction of that area.

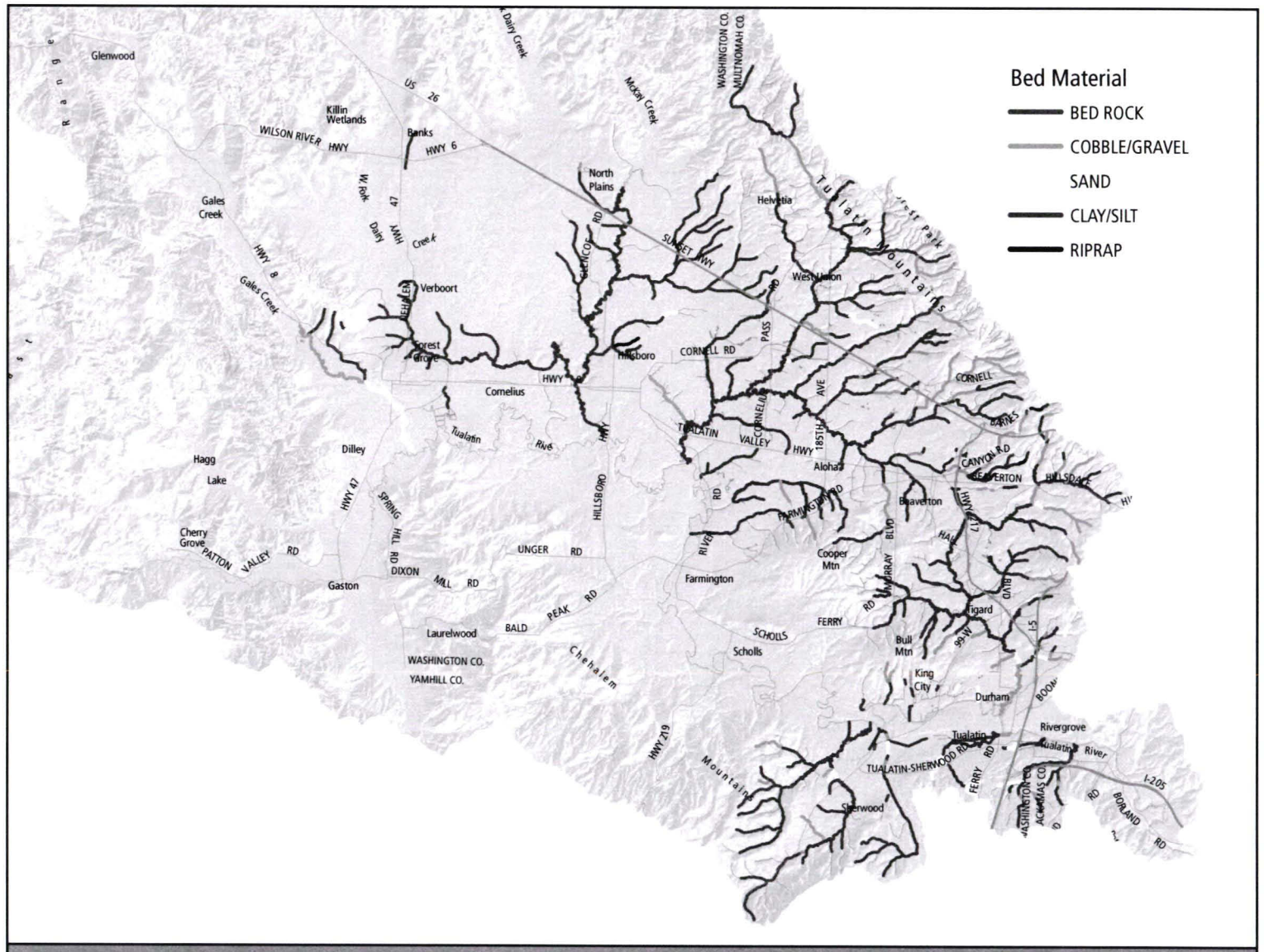

MAP II-11 Stream Bed Material

Aquatic Habitat

Aquatic habitats are strongly influenced by riparian vegetation and its effect on water flow, light and temperature, deposition of organic inputs, and supply of large woody debris (Naiman et al. 1992). Streams must offer a wide array of substrate, structural conditions, and wetland refugia to support aquatic species at their various life stages. The quality, quantity, and connectivity of stream corridors are often predicates for instream habitat conditions.



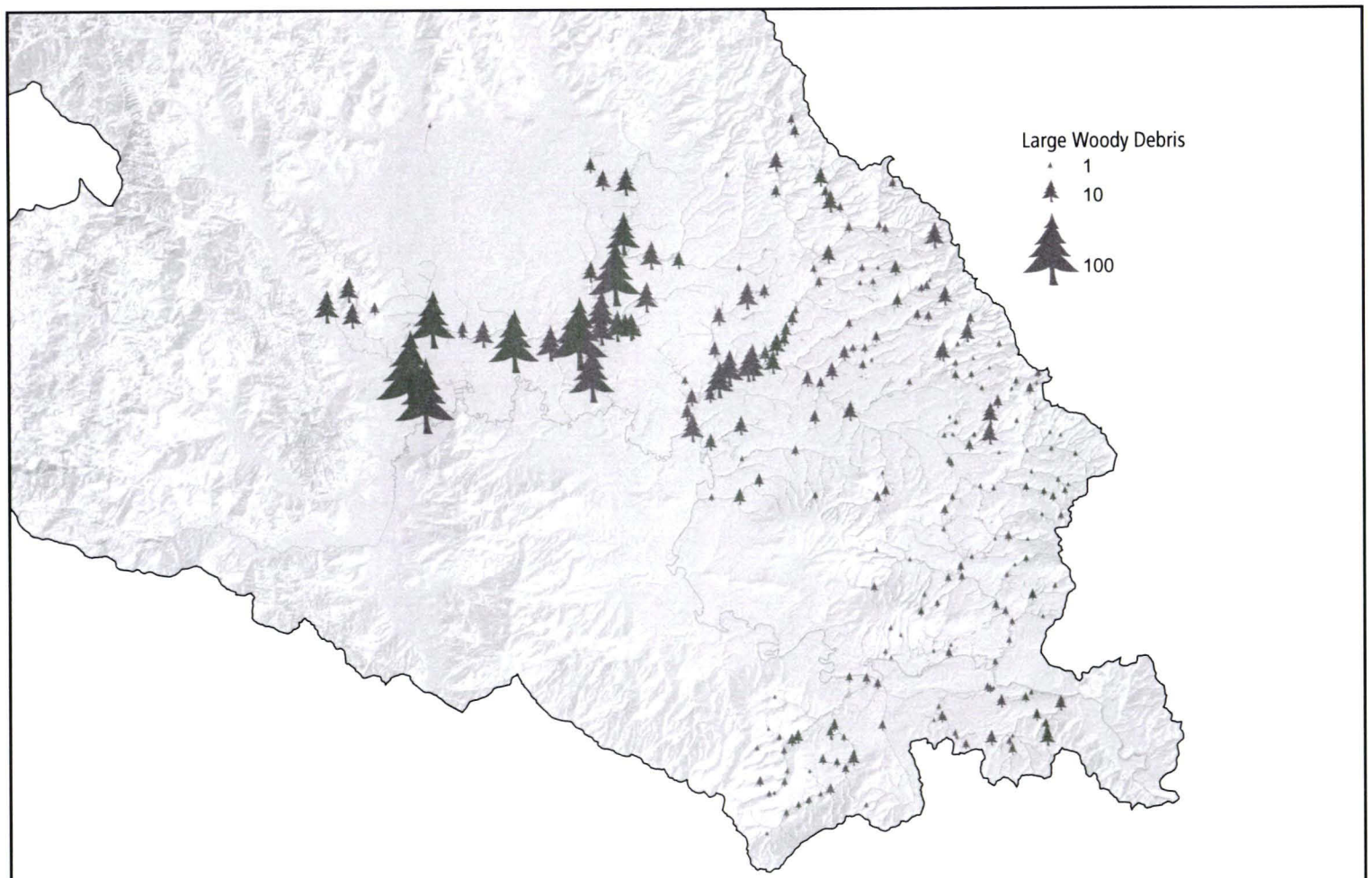

MAP II-12 Large Woody Debris Presence

Aquatic habitats—streams, ponds, and floodplain wetlands—were evaluated as part of the Rapid Stream Assessment (Watersheds 2000), ODFW fish surveys, and macroinvertebrate surveys.

Bed material type is an important component of aquatic habitat suitability for species. Steelhead and cutthroat trout prefer clean, cool water in streams with deep pools, overhanging cover, and rocky substrate. These conditions are found mostly in the rural forested headwaters of the Tualatin River Basin. Resident species, such as redside shiner, speckled dace, northern squawfish, and threespine stickleback, prefer clay/silt-bottom streams where they spawn in aquatic vegetation and muddy substrates of beaver ponds and backwater sloughs (Naiman et al. 1992). Map II-11 shows the location and type of instream bed material, the estimated number of miles in bedrock/rock or gravel substrate versus clay silt substrate. and the percentage of pools, riffles, and glides found in the basin, based on the 338 miles of surveyed streams. The natural bed materials of the basin's streams are a limiting factor for the support of salmonid species in the Tualatin River Basin.

Large wood is the backbone of streams in the Pacific Northwest. According to studies conducted by the University of Washington, structural complexity in the form of large wood in streams and wetlands is a critical element of healthy aquatic habitats in the Pacific Northwest (Booth et al. 1997; Horner et al. 1997). For streams that drain lowland forested watersheds, large wood dissipates flow energy, stabilizes channel banks and beds, entraps sediments, and forms pools that provide cover and shade for aquatic species. Woody debris from riparian zones creates complex habitat; both fish and invertebrates use habitat from fallen trees, roots, leaves, and other woody material (OSU 1993c; Gregory et al. 1991). In urbanized streams, large wood is depleted by direct removal, downcutting, and washout from increased peak storm flows (Booth et al. 1997). The loss of large wood alters stream channel form and processes, yielding increasing channel incision and bank erosion, greater sediment fluxes, and loss of heterogeneous channel form.

In general, the streams studied in the Tualatin River Basin lack significant quantities of large woody debris (particularly in the urban areas) and may be a limiting factor for habitat and water quality (Map II-12). Even in watersheds with low imperviousness, such as upper Rock Creek, the lack of large wood resulting from logging and channel clearing or scour appears to be limiting the retention of gravels in that bedrock-based stream. Removal of large wood from the riparian corridor has consequences that may take tens to hundreds of years for natural processes to correct (Naiman et al. 1992).

In contrast to the tributaries, the Tualatin River still retains much woody debris in the meander reach (river miles 33-58). According to reports of the Secretary of War (1875-1899), the Tualatin River and other rivers draining the east slope of the Coast Range contained concentrations of large woody debris in the form of drift jams that completely obstructed the channels for a distances of 100 to 1,500 meters at some channel locations (OSU 1993b). Such large woody debris complexes are currently present on the Tualatin River and Gales, Dairy, and McKay Creeks, although on the lower end of the historic range.

Healthy streams in the Pacific Northwest possess highly complex channel margins that include off-channel wetlands, backwater habitats, fallen trees, and other features that create areas of slow-moving water (Naiman, et al. 1992). Diverse fish and wildlife species use these channel margins for refugia from high flows, reproduction and rearing, foraging, and shelter. The riparian vegetation inventory identified the location and type of floodplain wetlands, backwater habitats, and other wetland features, and opportunities to enhance their conditions. Such features were most dominant in the lower-gradient sections of streams.

Map II-13 estimates spawning and rearing habitat for steelhead and trout, and priority subwatersheds for these species, based on the bed material, channel/floodplain characteristics, fish habitat preferences, and ODFW (2001 and 2002) fish surveys. Given the geomorphic character of the watershed, estimated spawning and rearing habitats for trout species were limited to the upper reaches of subwatersheds with rock-dominated substrate.

Part I: Healthy Streams Action Plan, outlines strategies for protecting sensitive spawning and rearing habitats. These include land protection; base flow restoration; revegetation; culvert repair; and channel diversity enhancements such as large woody debris, boulder placement, and off-channel habitat. It also recommends policy refinements to enhance aquatic habitat conditions, including increased streamside buffer widths in steeply sloped watersheds and improved stormwater quantity management.

Aquatic and Semi-Aquatic Species

Fish, crayfish, and macroinvertebrates are aquatic species that have been recently studied in the Tualatin River Basin. Historic information on fish assemblages and aquatic habitat is scarce (USGS 1997). The following text summarizes survey work conducted by ODFW and ABR, Inc. Appendix E provides historic data and the results of ODFW fish surveys in 1995 and 2000.

ODFW assessed fish and crayfish distribution and abundance in the Tualatin River Basin in 1993-1995 and 2000-2001. The most recent of the studies in 2000-2001 sampled 64 stream sites and five sites on the mainstem Tualatin River across the watershed. The catch included 19 native fish species and 14 non-native fish species. The native reticulate sculpin (Cottus perplexus) was the most abundant and widely distributed fish species. Only 6 percent of the catch were sensitive native species; the remaining 94 percent were native and non-native species that are moderately or highly tolerant of habitat degradation.

Map II-14 shows the relative abundance of native fish species in the system. Table II-16 shows the 33 fish species observed and their total numbers over the course of the sampling at each site; it also shows each site's modified mean index of biotic integrity (IBI) score, which is representative of aquatic health. (See ODFW 2002 for methodology details.) Sites that score over 75 are judged to be acceptable; sites that score 51-74 are marginally impaired; and sites that score less than 50 are severely impaired. The mean site and seasonal calculation of the IBI indicates that all sites in the Tualatin River Basin are considered severely impaired (ODFW 2001 and 2002). It may be appropriate to modify the indices to address specific habitat and species limitations resulting from the Tualatin River Basin's unique geologic conditions.

Aquatic insects are critical to the food web of stream and wetland environments. Many fish, waterfowl, amphibians, shorebirds, and other animals forage heavily on the terrestrial and aquatic stages of insects. Because aquatic invertebrates convert plant material into animal tissue in freshwater ecosystems, they can be of immense importance in the food chain leading to fish production. Macroinvertebrates are monitored to gage changes in water quality. Changes in composition of aquatic insect species will reflect, to various degrees, shifts in the quality of water (McCafferty 1998). To establish baseline information about the status of macroinvertebrate communities, Clean Water Services contracted with ABR, Inc. to sample various sites in 2000 and again in 2002. Map II-15 shows the 63 sites sampled in 2002 and the relative abundance of the species found. Of these, 37 sites were low gradient (less than 1.5 percent channel slope) and 26 sites were high gradient (more than 1.5 percent channel slope). The 2000 study focused on the difference between rural and urban areas at 44 sample sites. The 2002 study modified the focus to examine not only land use, but also the differences in physical habitat and water quality at an expanded number of sites.

In the Tualatin River Basin, it is normal for the low-gradient streams to be dominated by clay and silt channel beds and the high-gradient headwaters to have some rocky substrate. Metrics developed for macroinvertebrates in the Pacific Northwest traditionally focus on the richness of mayfly (Order: Ephemeroptera), stonefly (Order: Plecoptera), and caddisfly (Order: Trichoptera), commonly referred to as EPT species. These species thrive in clear, cool, and cold water environments dominated by rock substrates with low to no pollution (McCafferty 1998). Consequently, high-gradient reaches could be assessed using multimetric analysis (scoring, against a defined metrics, community attributes that are

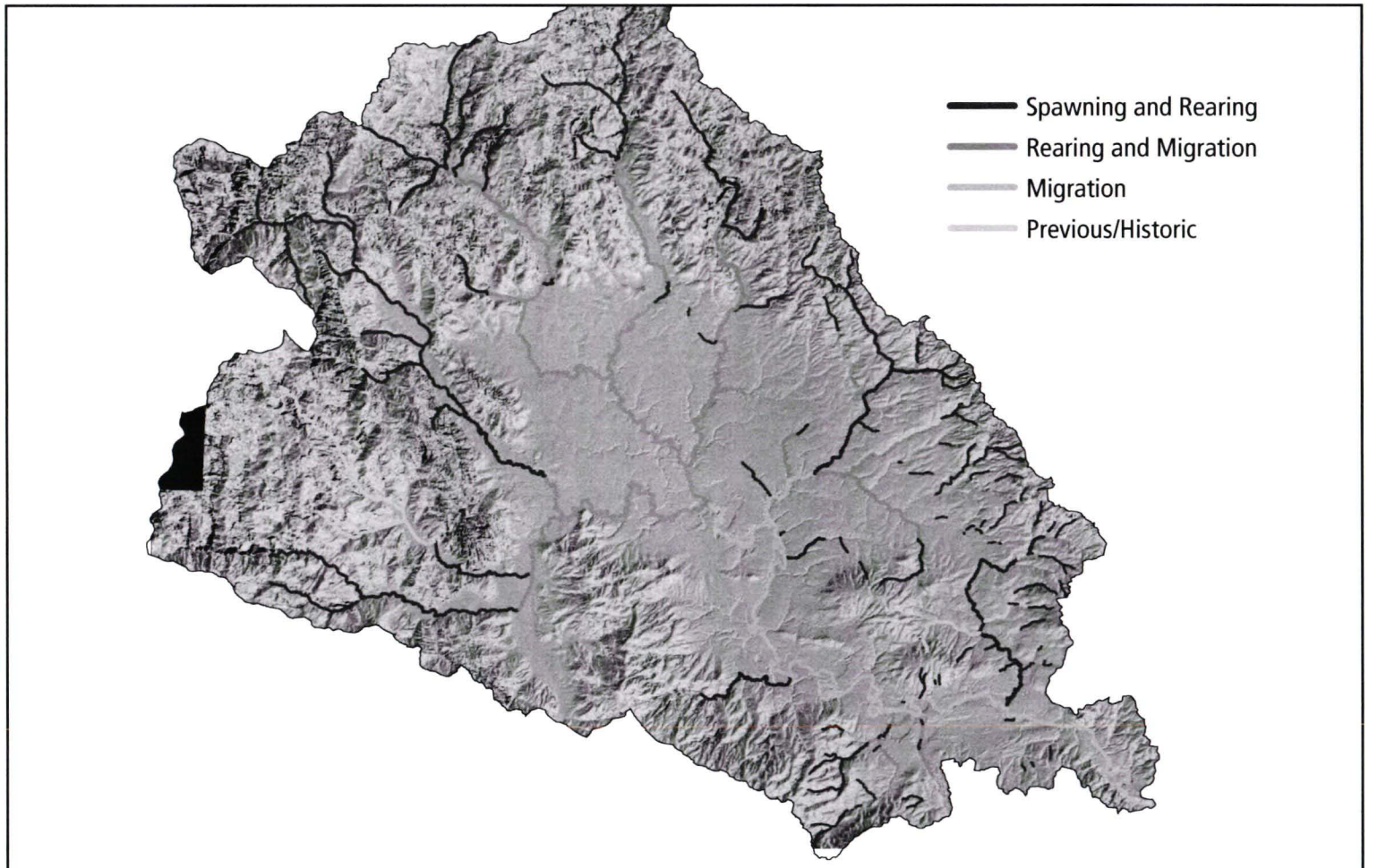

MAP II-13 Estimated Spawing and Rearing Habitats for Steelhead Cutthroat Trout



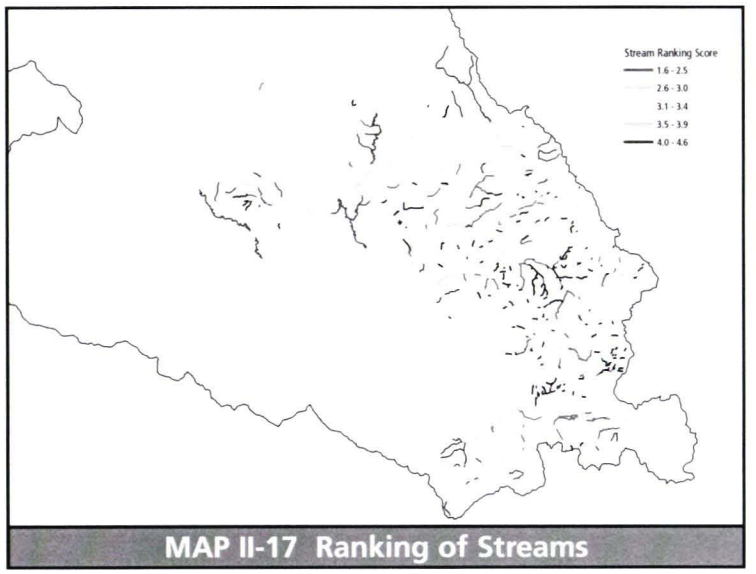

MAP II-17 Ranking of Streams

Table II-16: *Fish Species Identified in the Tualatin River Basin 1999-2001*

Family, Species	Relative tolerance[d]	Adult Trophic Group	PERCENT OF CATCH Urban Areas	Rural Areas
Petromyzontidae				
Western Brook lamprey Lampetra richardsoni	Intermediate	--a	1.93	2.99
Pacific lamprey Lampetra tridentata	Intermediate	Piscivore	0.06	
Unidentified lamprey Lampetra spp.	Intermediate	--	0.07	0.08
Salmonidae				
Chinook salmon Oncorhynchus tshawytscha	Sensitive	Insectivore		0.08
Coho salmon Oncorhynchus kisutch	Sensitive	Insectivore		0.54
Cutthroat trout Oncorhynchus clarkii	Sensitive	Insectivore	2.97	14.18
Rainbow trout Oncorhynchus mykiss	Sensitive	Insectivore	0.37	1.01
Mountain whitefish Prosopium williamsoni	Intermediate	Insectivore		0.02
Unidentified Salmonidae	Sensitive	Insectivore	0.08	0.56
Cyprinidae				
Northern pikeminnow Ptychocheilus oregonensis	Tolerant	Piscivore		0.11
Redside shiner Richardsonius balteatus	Intermediate	Insectivore	6.9	3.12
Speckled dace Rinichthys osculus	Intermediate	Insectivore	3.62	4.18
Longnose dace Rhinichthys cataractae	Intermediate	Insectivore		0.51
Goldfish Carassius auratusb	Tolerant	Omnivore	0.06	
Common carp Cyprinus carpiob	Tolerant	Omnivore	0.01	
Fathead Minnow Pimephales promelasb	Tolerant	Omnivore	7.36	
Catostomidae				
Largescale sucker Catostomus macrocheilus	Tolerant	Omnivore	0.53	0.53
Ictaluridaec				
Brown bullhead Amerius nebulosus	Tolerant	Insectivore	0.21	
Yellow bullhead Amerius natalis	Tolerant	Insectivore	0.66	
Poeciliidaec				
Mosquitofish Gambusia affinis	Tolerant	Insectivore	5.9	
Gasterosteidae				
Threespine stickleback Gasterosteus aculeatus	Tolerant	Insectivore	6.81	0.32
Centrarchidaec				
Unidentified Lepomis spp.	Tolerant		0.46	0.05
Bluegill Lepomis macrochirus	Tolerant	Insectivore	1.58	
Pumpkinseed Lepomis gibbosus	Tolerant	Insectivore	1.36	
Warmouth Lepomis gulosus	Tolerant	Piscivore	0.02	
Largemouth bass Micropterus salmoides	Tolerant	Piscivore	0.59	0.11
White Crappie Promoxis annularis	Tolerant	Insectivore	0.01	
Black Crappie Promoxis nigromaculatus	Tolerant	Insectivore	0.01	
Percidaec				
Yellow perch Perca flavescens	Intermediate	Piscivore	0.02	
Cottidae				
Unidentified Cottus spp.	--	Insectivore	0.01	
Reticulate sculpin Cottus perplexus	Intermediate	Insectivore	57.81	62.57
Torrent sculpin Cottus rhotheus	Intermediate	Piscivore	0.51	6.88
Prickly sculpin Cottus asper	Intermediate	Insectivore	0.02	2.21

a Adults do not feed
b Introduced species
c Introduced family
d Relative tolerance and trophic group classifications from Zaroban et al. (1999).

Table II-16: *Fish Species Identified in the Tualatin River Basin 1999-2001*

Creek - Site	Site ID	Mean Score Index of Biotic Integrity	Brown Bullhead	Bluegill	Carp	Chinook	Coho	Crayfish	Cutthroat	Goldfish	Largemouth Bass	Longnose Dace	Fathead Minnow	Mosquitofish	Mountain whitefish	Nothern Pikeminnow	Pacific Lamprey	Prickley Sculpin	Pumpkinseed	Rainbow Trout	Reticulate Sculpin	Speckled Dace	Redside Shiner	Threespined Stickleback	Largescale Sucker	Torrent Sculpin	Unidentified Lamprey	Unidentified Lepomis	Unidentified Sculpin	Unidentified Trout	Warmouth	Western Brook Lamprey	White Crappie	Yellow Bullhead	Yellow Perch	Anadromous	Native	Invasive	Total
Ash-Lower	ASL	27.2	0	0	0	0	0	7	1	0	0	0	0	2	0	0	0	0	0	0	173	0	56	5	16	0	0	0	0	0	0	0	0	0	0	251	2	253
Ash-Middle	ASM	32.1	0	0	0	0	0	12	0	0	0	0	1	0	0	0	0	0	0	0	527	0	227	0	1	0	0	0	0	0	0	0	0	0	0	755	1	756
Ash-Upper	ASU	42.1	0	0	1	0	0	4	0	0	0	0	0	0	0	0	0	0	0	0	280	7	136	0	0	0	0	0	0	0	0	0	0	0	0	423	1	424
Ayers-Middle	AYM	37.8	0	0	0	0	0	1	24	0	0	0	0	0	0	0	0	0	0	0	198	0	0	0	0	0	0	0	0	0	0	7	0	0	0	31	230	0	460
Ayers-Upper	AYU	48.5	0	0	0	0	0	3	46	0	0	0	0	0	0	0	0	0	0	0	140	0	0	0	0	0	2	0	0	0	0	18	0	0	0	66	209	0	418
Baker-Middle	BKM	35.8	0	0	0	0	0	3	26	0	0	0	0	0	0	0	0	0	0	0	141	7	0	0	0	0	0	0	0	0	0	2	0	0	0	28	179	0	358
Baker-Upper	BKU	29.9	0	0	0	0	0	7	0	0	0	0	0	0	0	0	0	0	0	0	49	0	0	0	0	0	0	0	0	0	0	0	0	0	0	0	56	0	112
Butternut-Lower	BNL	36	3	2	1	0	0	7	1	0	4	0	0	1	0	0	0	0	0	0	186	0	0	0	1	0	0	0	0	0	0	12	0	0	0	0	200	11	211
Butternut-Middle	BNM	35.2	0	8	0	0	0	8	0	6	0	0	68	111	0	0	0	0	0	0	264	153	0	324	0	0	0	0	0	0	0	0	1	0	0	0	741	194	935
Butternut-Upper	BNU	35.8	0	0	0	0	0	0	0	0	0	0	0	4	0	0	0	0	0	0	28	349	0	56	0	0	0	0	0	0	0	0	0	0	0	0	433	4	437
Bronson-Lower	BRL	35.1	0	1	0	0	0	7	0	0	19	0	0	0	0	0	0	0	0	0	249	1	0	60	0	0	0	0	0	0	0	25	0	0	0	0	335	20	355
Bronson- Middle	BRM	45.9	0	0	0	0	0	26	5	0	0	0	0	0	0	0	0	0	0	1	273	0	0	0	0	0	3	0	0	0	0	26	0	0	0	1	308	0	308
Burris-Middle	BUM	46.1	0	0	0	0	0	42	45	0	0	0	0	0	0	0	0	0	0	0	234	27	0	0	0	0	0	0	0	0	0	20	0	0	0	65	368	0	736
Burris-Upper	BUU	28.1	0	0	0	0	0	9	6	0	0	0	0	0	0	0	0	0	0	0	106	3	0	0	0	0	0	0	0	0	0	1	0	0	0	7	125	0	250
Beaverton-Lower	BVL	27.1	0	0	0	0	0	5	0	0	0	0	0	6	0	0	0	0	0	0	219	0	1	3	1	0	0	0	0	0	0	1	1	0	0	0	225	7	232
Beaverton-Middle	BVM	39.9	0	1	0	0	0	27	10	0	3	0	1	4	0	0	0	0	0	0	296	0	41	12	3	0	0	0	0	0	1	27	0	3	0	0	389	13	402
Cedar-Middle	CDM	33	0	0	0	0	0	13	10	0	0	0	0	0	0	0	0	0	0	2	173	0	72	9	4	0	3	0	0	0	0	0	0	0	0	2	273	0	273
Cedar-Upper	CDU	38.9	0	0	0	0	0	37	25	0	0	0	1	0	0	0	3	0	0	0	421	0	83	10	12	0	1	0	0	0	0	12	0	0	0	0	567	1	568
Christensen-Middle	CHM	33.9	0	0	0	0	0	1	0	0	0	0	0	0	0	0	0	0	0	0	92	10	14	21	9	0	0	0	0	0	0	4	0	0	0	4	151	0	302
Christensen-Upper	CHU	30.6	0	0	0	0	0	0	21	0	0	0	0	0	0	0	0	0	0	0	2	0	0	0	0	0	0	0	0	0	0	0	0	0	0	21	23	0	46
Council-Middle	CLM	29.4	0	4	0	0	0	1	9	0	17	0	0	0	0	0	0	0	0	0	90	5	7	13	0	0	0	0	0	0	0	0	0	0	0	0	124	21	145
Council-Upper	CLU	32.3	7	1	0	0	0	0	0	0	0	0	3	86	0	0	0	0	0	0	16	21	4	20	0	0	0	0	0	0	0	0	0	9	0	0	61	106	167
Cedar Mill-Middle	CMM	31.9	2	6	0	0	0	6	0	2	0	0	277	15	0	0	1	0	0	0	481	3	11	33	1	0	0	0	0	0	0	4	0	0	0	0	534	302	836
Cedar Mill-Upper	CMU	38.9	0	0	0	0	0	26	0	1	0	0	19	0	0	0	0	0	0	0	603	0	5	0	0	0	1	0	0	0	0	22	0	0	0	0	631	20	651
Chicken-Lower	CNL	38.8	0	1	0	0	0	20	22	0	7	0	0	0	0	0	5	0	2	10	466	0	4	0	35	0	0	0	0	0	0	18	0	0	0	10	560	10	570
Chicken-Middle	CNM	47.6	0	0	0	0	0	10	27	0	0	0	0	0	0	0	0	0	0	0	279	3	108	0	1	0	0	0	0	0	0	26	0	0	0	0	444	0	444
Chicken-Upper	CNU	46.1	0	0	0	0	0	17	63	0	0	0	0	0	0	0	0	0	0	0	216	0	0	0	0	0	0	0	0	0	0	18	0	0	0	0	297	0	297
Dawson-Lower	DNL	45	0	0	0	0	0	23	2	0	1	0	0	0	0	0	0	0	0	0	185	3	1	5	0	0	0	0	0	0	0	8	0	0	0	0	204	1	205
Dawson-Middle	DNM	42.4	0	0	0	0	0	20	0	0	0	0	0	2	0	0	0	0	0	0	131	14	76	30	0	0	0	0	0	0	0	1	0	0	0	0	252	2	254
Dawson-Upper	DNU	39.7	0	0	0	0	0	9	1	0	0	0	0	1	0	0	0	0	0	0	84	83	1	131	1	0	0	0	0	0	0	1	0	0	0	0	302	1	303
Dairy-Middle	DYM	37.9	0	0	0	0	0	5	3	0	0	0	0	3	0	0	0	0	0	0	158	0	0	0	0	0	0	0	1	0	0	6	0	0	0	9	173	3	176
Dairy-Upper	DYU	50.9	0	0	0	0	0	7	248	0	0	0	0	0	0	0	0	0	0	42	202	0	0	0	0	93	0	0	0	8	0	31	0	0	0	329	631	0	631
Fanno-Lower	FLL	41.7	1	2	0	0	0	12	0	0	17	0	0	1	0	0	1	0	0	0	215	2	6	0	1	0	1	0	0	0	0	14	0	0	0	0	240	21	261
Fanno-Middle	FLM	45.3	0	0	0	0	0	4	17	0	0	0	0	21	0	0	0	0	0	0	632	0	196	0	0	0	2	0	0	2	0	7	0	0	0	2	856	21	877
Fanno-Upper	FUU	44.9	0	0	0	0	0	10	28	0	0	0	0	1	0	0	0	0	0	3	254	1	8	0	0	0	0	0	0	4	0	2	0	0	0	7	300	1	301
Gales-Lower	GSL	45	0	0	0	0	1	4	1	0	0	0	0	0	0	1	0	1	0	0	125	2	40	0	3	0	0	0	0	0	0	5	0	0	0	1	179	0	179
Gales-Middle	GSM	43.4	0	0	0	0	0	7	0	0	0	32	0	0	0	6	0	11	0	2	291	165	109	0	15	37	2	0	0	1	0	8	0	0	0	3	679	0	679
Gales-Upper	GSU	39.7	0	0	0	0	0	3	2	0	0	1	0	0	0	0	0	0	0	29	111	0	0	0	0	83	1	0	0	13	0	2	0	0	0	42	242	0	242
Heaton-Middle	HNM	43.1	0	0	0	0	0	29	8	0	0	0	0	0	0	0	0	0	0	0	385	2	0	0	0	0	0	0	0	0	0	55	0	0	0	63	479	0	958
Heaton-Upper	HNU	41.2	0	0	0	0	0	2	17	0	0	0	0	0	0	0	0	0	0	0	106	0	0	0	0	0	0	0	0	0	0	6	0	0	0	23	131	0	262
Hedges-Lower	HSL	30.7	0	0	0	0	0	1	2	0	6	0	0	0	0	0	0	0	1	0	472	0	0	317	0	0	0	0	0	0	0	0	0	0	0	3	791	10	801
Hedges-Middle	HSM	24.6	0	1	0	0	0	0	0	0	5	0	0	178	0	0	0	1	0	0	18	0	0	40	0	0	0	1	0	0	0	0	0	0	0	0	59	185	244
Hedges-Upper	HSU	38.8	0	0	0	0	0	10	0	0	0	0	0	0	0	0	0	0	0	2	426	0	0	0	0	0	1	0	0	0	0	1	0	0	0	2	430	0	430
Johnson South-Middle	JSM	27.2	0	2	0	0	0	2	0	0	0	0	0	6	0	0	0	0	4	0	176	2	11	12	0	0	0	0	0	0	0	0	0	0	0	0	201	12	213
Johnson South-Upper	JSU	8.9	0	0	0	0	0	0	0	0	0	0	0	2	0	0	0	0	0	0	3	8	0	18	0	0	0	0	0	0	0	0	0	0	0	0	29	2	31
McFee-Middle	MFM	40.8	0	0	0	0	0	1	0	0	0	0	0	0	0	0	0	0	0	1	132	1	0	0	0	0	0	0	0	0	0	11	0	0	0	11	146	0	146
McFee-Upper	MFU	46.6	0	0	0	0	0	32	81	0	0	0	0	0	0	0	0	0	0	6	465	23	0	0	5	0	0	0	0	0	0	26	0	0	0	6	606	0	606
McKay-Lower	MKL	30.8	0	0	0	0	0	14	5	0	0	0	0	0	0	0	0	0	0	0	146	0	0	0	1	0	0	0	0	0	0	2	0	0	0	0	154	0	154
McKay-Middle	MKM	40.9	0	0	0	0	0	3	3	0	0	0	0	0	0	0	0	0	0	0	113	1	0	0	0	0	0	2	0	0	0	2	0	0	0	0	119	2	121
McKay-Upper	MKU	42.7	0	0	0	0	0	29	206	0	0	0	0	0	0	0	0	56	0	1	178	0	4	0	0	128	0	0	0	11	0	8	0	0	0	12	592	0	592
Rock-Lower	RLL	42.4	0	5	0	0	0	6	4	0	2	0	0	0	0	0	0	0	1	0	406	0	0	0	0	0	0	0	0	0	0	20	0	0	0	0	430	8	438
Rock-Middle	RMM	39.1	0	0	0	0	0	3	0	0	3	0	0	3	0	0	0	0	0	0	239	0	4	4	4	0	0	0	0	0	0	4	0	0	0	0	255	6	261
Roaring-Lower	RRL	54.4	0	0	0	5	29	24	82	0	0	0	0	0	0	0	0	0	0	19	338	1	0	0	0	132	0	0	1	0	0	2	0	0	0	137	633	0	1266
Roaring-Middle	RRM	35	0	0	0	0	0	10	278	0	0	0	0	0	0	0	0	0	0	7	363	0	0	0	0	0	0	0	0	0	0	0	0	0	0	285	658	0	1316
Rock-Upper	RUU	41.9	0	0	0	0	0	19	54	0	0	0	0	0	0	0	0	0	0	5	252	0	0	0	0	0	0	0	0	0	0	3	0	0	0	5	314	0	314
South Rock-Middle	SRM	42.1	6	7	0	0	0	5	5	0	15	0	0	0	0	0	0	2	3	1	487	0	0	58	0	0	0	0	0	0	1	21	0	0	0	1	574	32	606
South Rock-Upper	SRU	24.1	0	0	0	0	0	0	0	0	0	0	0	17	0	0	0	0	0	0	20	0	1	91	2	0	0	0	0	0	0	0	0	0	0	0	114	17	131
Summer-Lower	SUL	32.1	5	13	0	0	0	53	0	0	0	0	9	0	0	0	0	0	19	0	805	0	90	0	3	0	0	0	0	0	0	39	0	12	0	0	937	111	995
Summer-Middle	SUM	21.1	14	215	0	0	0	11	0	0	6	0	882	40	0	0	0	0	214	0	44	0	7	0	10	0	0	81	0	0	0	0	0	95	0	0	61	1547	1608
Summer-Upper	SUU	11.6	0	12	0	0	0	4	0	1	2	0	76	555	0	0	0	0	6	0	0	0	90	0	0	0	0	2	0	0	0	0	0	0	0	0	90	654	744
Tualatin-Midddle	TUM	39.5	0	0	0	0	0	6	0	0	0	0	0	0	0	0	0	5	0	0	76	7	24	0	0	1	0	0	0	0	0	4	0	0	0	0	117	0	117
Tualatin-Upper	TUU	47.5	0	0	0	0	4	17	19	0	0	1	0	0	0	0	0	31	0	4	107	5	0	0	0	41	0	0	0	4	0	0	0	0	0	12	216	0	216
West Dairy-Middle	WDM	49	0	0	0	0	0	7	2	0	0	0	0	0	0	0	0	3	0	0	66	0	15	0	2	0	0	1	0	0	0	7	0	0	0	0	95	1	96
West Dairy-Upper	WDU	41.3	0	0	0	0	0	8	71	0	0	0	0	0	0	0	0	40	0	0	194	0	0	0	0	36	0	0	0	7	0	9	0	0	0	7	357	0	357

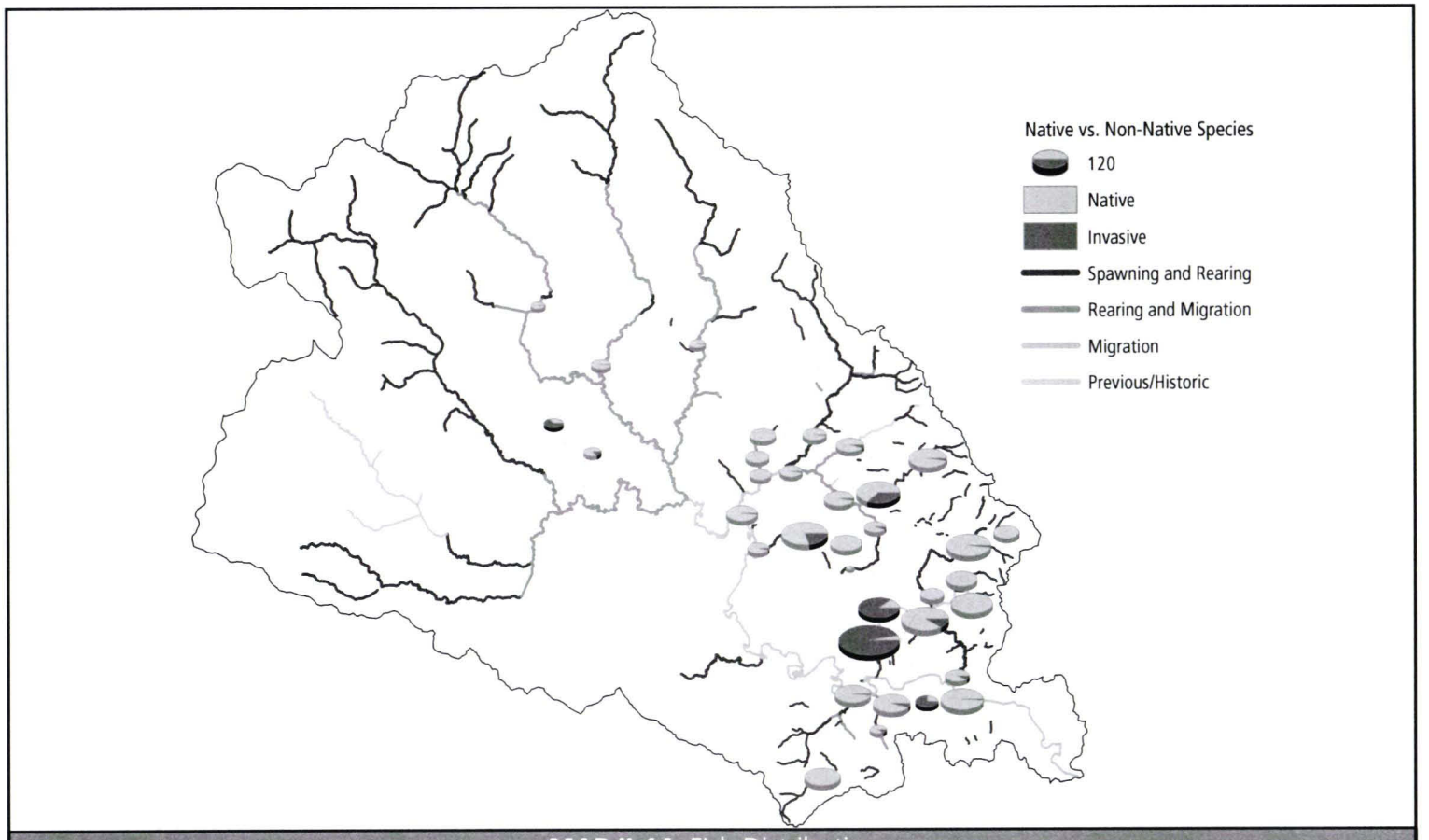

MAP II-14 FIsh Distribution

known to be responsive to stream degradation) and a correlation of environmental variables. However, the low-gradient reaches could not be assessed against a metric and were instead examined with multivariate pattern analysis, which uses multivariate statistics and reference condition data to produce models that predict which taxa should occur at a site, given location and stream type, in the absence of impairment (ABR 2002).

ABR, Inc. found that the condition of high-gradient reaches varied greatly and was strongly influenced by land use in the watershed. Stream sites in forested watersheds produced a high diversity of low-tolerance EPT taxa. However, high-gradient reaches in urban areas produced a low diversity of high-tolerance taxa and EPT richness. The low-gradient valley-floor streams commonly produced midges (Family: Chironomidae), worms (Class: Oligochaeta), and mollusks (Phylum: Mollusca) and showed much less variability in community composition than the high-gradient reaches. The multivariate analysis indicated that communities varied with land use and instream physical conditions, as well as with dissolved oxygen levels. Table II-17 provides the mean ranks of metric scores of the 37 low-gradient streams and shows the multimetric score for the 26 high-gradient streams.

Other semi-aquatic species of amphibians and reptiles, birds, and mammals have been studied in the Willamette Basin, but not specifically in the Tualatin River Basin (USGS 1997). Beaver (Castor canadensis), a keystone species in the Tualatin River Basin and throughout North America, influence local hydrology, channel geomorphology, and nutrient dynamics in the stream environment through dam building and feeding activities (OSU 1993b). While no detailed study of beavers has been performed, their role in restoring stream ecosystems in the basin will be encouraged with enhancement activities, as appropriate. In addition, the District has begun an evaluation of non-native nutria presence and their impacts on enhancement success. Table II-15 lists the semi-aquatic species in the Tualatin River Basin observed by local scientists during the Watersheds 2000 inventory and other field investigations since 1993.

Monitoring the diversity and population of native and non-native aquatic and semi-aquatic species is an important tool to assess the effectiveness of efforts to improve watershed and stream health. Part I: Healthy Streams Action Plan, recommends the continued monitoring of aquatic species to gage the success of the overall program and to establish trending information.

Upland Habitat and Species

The Healthy Streams Plan project did not specifically evaluate the quality and quantity of species utilization of upland habitats. However, the location and extent of greenspace resources, including uplands, is available as part of Metro's parks and greenspaces planning. Map II-16 shows the extent of significant upland habitat (habitat extending beyond 200 feet from the stream, wetland,

Table II-17: *Macro-Invertebrate Community Site Scoring in the Tualatin Basin*

Multimetric Scores of 26 High Gradient Streams

Reach Name	Code	2001 Score 1
Dairy Creek (Middle East Fork)	DYM1	38
Dairy Creek (Upper West Fork)	DYM4	38
Gales Creek (Upper)	GSM1	38
Burris Creek (Upper)	BIM1	36
Roaring Creek (Middle)	RGM1	36
Christensen Creek (Upper)	CHM1	34
Chicken Creek (Upper)	CNM1	34
Bronson Creek (Upper)	BRM1	32
Dairy Creek (Upper East Fork)	DYM2	32
Scoggins Creek (Upper)	SCM1	32
Sain Creek (Lower)	SNM1	32
Baker Creek (Upper)	BKM1 (Dup 1)	30
Baker Creek (Upper)	BKM1 (Dup 2)	30
McFee Creek (Upper)	MFM1 (Dup 1)	30
McFee Creek (Upper)	MFM1 (Dup 2)	28
Rock Creek (Upper 1)	RUM1 (Dup 1)	28
Tanner Creek (Lower)	TNM1	28
McKay Creek (Upper)	MKM1	26
Fanno Creek (Lower)	FLM1	24
Rock Creek (Upper 1)	RUM1 (Dup 2)	24
Cedar Mill Creek (Upper)	CMM2	22
Chicken Creek (Middle)	CNM2	20
Gales Creek (Middle)	GSM2	20
Ash Creek (Upper)	ASM1	18
Bannister Creek (Lower)	BAM1	18
Fanno Creek (Upper 1)	FUM1	18
Willow Creek (Upper)	WLM1	18
Golf Creek (Upper)	GLM1	16
Ayers Creek (Upper)	AYM1 (Dup 2)	16
Ayers Creek (Upper)	AYM1(Dup1)	14

Mean Ranks of Metric Scores of 37 Low Gradient Streams

Reach Name	Code	2001 Rank 2
Scoggins Creek (Lower)	SCM3	4.8
Chicken Creek (Lower)	CNM3	5.3
Mckay Creek (Middle)	MKM2	5.3
Dairy Creek (Middle W)	DYM5	6.7
Johnson Ck. (Middle N)	JNM1	7
Gales Creek (Lower)	GSM3	7.5
Heaton Creek (Middle)	HTM1	7.5
Bronson Creek (Middle)	BRM2	8
Saum Creek (Lower)	SAM1	9.2
Johnson Ck. (Middle S)	JSM2	10.2
Cedar Creek (Upper)	CDM1	10.3
Council Creek (Middle)	CLM1	10.3
Scoggins Creek (Middle)	SCM2	10.8
Johnson South (Upper S)	JSM1	11.3
Mckay Creek (Lower)	MKM3	11.5
Beaverton Ck. (Upper 1)	BUM1	11.8
Rock Creek (Lower)	RLM1	12.2
Beaverton Ck. (Upper 2)	BUM2	12.5
Hedges Creek (Lower)	HDM1	12.7
Johnson Creek (Lower S)	JSM3	12.8
Beaverton Creek (Lower)	BCM1	13
Ash Creek (Lower)	ASM2	13.3
Cedar Mill Creek (Middle)	CMM1	13.3
Cedar Creek (Middle)	CDM2	14.2
McFee Creek (Middle)	MFM2	14.5
Christensen Ck. (Lower)	CHM2	15
Willow Creek (Lower)	WLM2	15.2
Dawson Creek (Lower)	DNM2	15.3
Dawson Creek (Upper)	DNM1	15.8
Fanno Creek (Upper 2)	FUM2	16.7
Summer Creek (Lower)	SMM2	16.7
Dairy Creek (Lower E)	DYM3	16.8
Rock Creek (Milddle)	RMM1	17.2
Fanno Creek (Middle)	FMM1	18.2
Sylvan Creek (Middle)	SVM1	18.8
Summer Creek (Upper)	SMM1	20
Rock Creek (Upper 2)	RUM2	21.5

1 Multimetric score: the higher the score the higher quality the community
2 Mean rank: the lower rank, the higher quality the community

or floodplain edge), as defined by Metro's Goal 5 planning process. Developed parks and schools, while used by a few species, are not considered true upland habitats and are excluded from the map. The Tualatin Hills Nature Park, at 193 acres, is the largest publicly owned and accessible upland habitat inside the urban growth boundary in the Tualatin River Basin.

Upland habitats provide natural areas, wildlife habitat, migration corridors, and pervious areas for stormwater infiltration. Uplands, however, are also designated as buildable land inside the urban growth boundary. Local planning departments and Metro are responsible for balancing the needs of local wildlife species with social and economic development. According to the Oregon Biodiversity Project (Defenders of Wildlife 1998), the key upland habitats in the Willamette ecoregion in need of greater protection include the Oregon white oak savanna/woodlands and native grasslands and prairies. Oregon white oak savanna/woodlands have declined by more than 80 percent, and native grasslands/prairies have declined by 50 to 98 percent since the early settlement. Less than 1 percent of the land cover in the Tualatin River Basin is prairie habitat and oak savanna. The protection status of each remaining site will vary, depending on the social, economic, and energy issues associated with the site. Table II-15 lists the upland species known to occupy the Tualatin River Basin.

Preserving and enhancing strategically located upland habitat areas could help protect water quality and aquatic habitat by intercepting, dispersing, and infiltrating stormwater runoff from surrounding impervious areas. Part I: Healthy Streams Action Plan, outlines refinements to stormwater and land use policies that could have an ancillary, but complementary, benefit of preserving upland habitat.

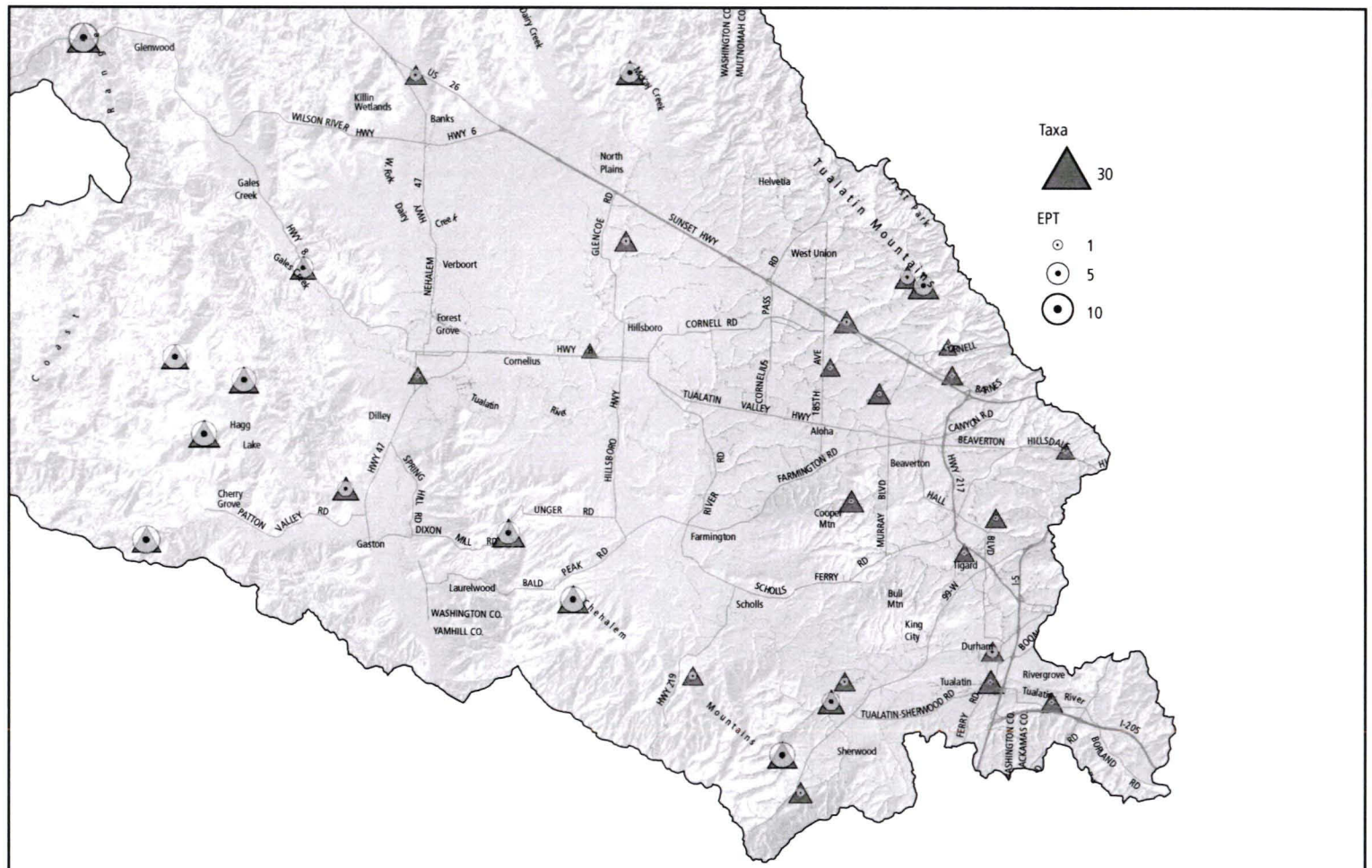

MAP II-15 Macroinvertabrates

Qualitative Assessment of Stream Quality

Qualitative assessments are used to compare the conditions of a site to conditions of other sites. The ecologists conducting the RSAT survey ranked the stream segments as excellent, good, fair, or poor relative to all the sites they sampled, based on their best professional judgment. Because three teams of consultants completed the RSAT data collection, the qualitative rankings among the teams could be inconsistent. The District determined that a more quantitative approach would be appropriate and developed a 1 to 5 scoring method for subwatersheds' imperviousness, base hydrology, geomorphic condition, riparian condition, water quality, and aquatic species habitat. The attribute scores were combined to give each site an overall score. Statistical breaks in the overall scores were then used to assign the qualitative rank. Table II-18 shows the scoring method. Map II-17 shows the overall qualitative ranking of streams.

Table II-18: ***Qualitative Scoring Method***

		High → Low				
		5	4	3	2	1
Watershed Imperviousness	Percent EIA by subbasin	0 - 6 %	7 - 13 %	14 - 22 %	23 - 41 %	42 - 70 %
Hydrology	Percent peak flow altered from historic	0 - 20 %	21 - 40 %	41 - 54 %	55 - 57 %	68 - 84 %
Geomorphology	Rosgen classification	A,B,C,D,E				F, G
	Total percent of bank stability	88 - 100 %	71 - 87 %	51 - 70 %	31 - 50 %	0 - 30 %
Riparian Vegetation	Percent canopy cover	86 - 100 %	67 - 85 %	42 - 66 %	11 - 41 %	0 - 10%
	Percent invasive species	0 - 11%	12 - 35 %	36 - 60 %	61 - 83 %	84 - 100 %
	Total acreage of riparian buffer by reach	104 +	60 - 104	31 - 60	14 - 31	< 14
	Riparian connectivity (Metro Score)	High	Med-High	Medium	Med-Low	Low
Aquatic Habitat (average of)	Location in watershed	Headwaters		Moderate Gradient		Low Gradient
	Native fish habitat	Spawning	Rearing	Migration		No Anadromous
	Key native species	Steelhead		Cutthroat		Resident
Large Wood (average of)	Number of pieces by reach	29 - 68	17 - 28	9 -- 16	3 -- 8	0 - 2
	Potential future large wood	4	3	2	1	0
Water Quality	Total aggregate number of: in-stream ponds; animal lots; septic systems: NPDES outfalls; industrial lots	0	1 -- 2	3 -- 6	7 -- 10	11 -- 15
Culverts	Number of culverts in reach	0	1	2 -- 3	4 -- 5	6 -- 9

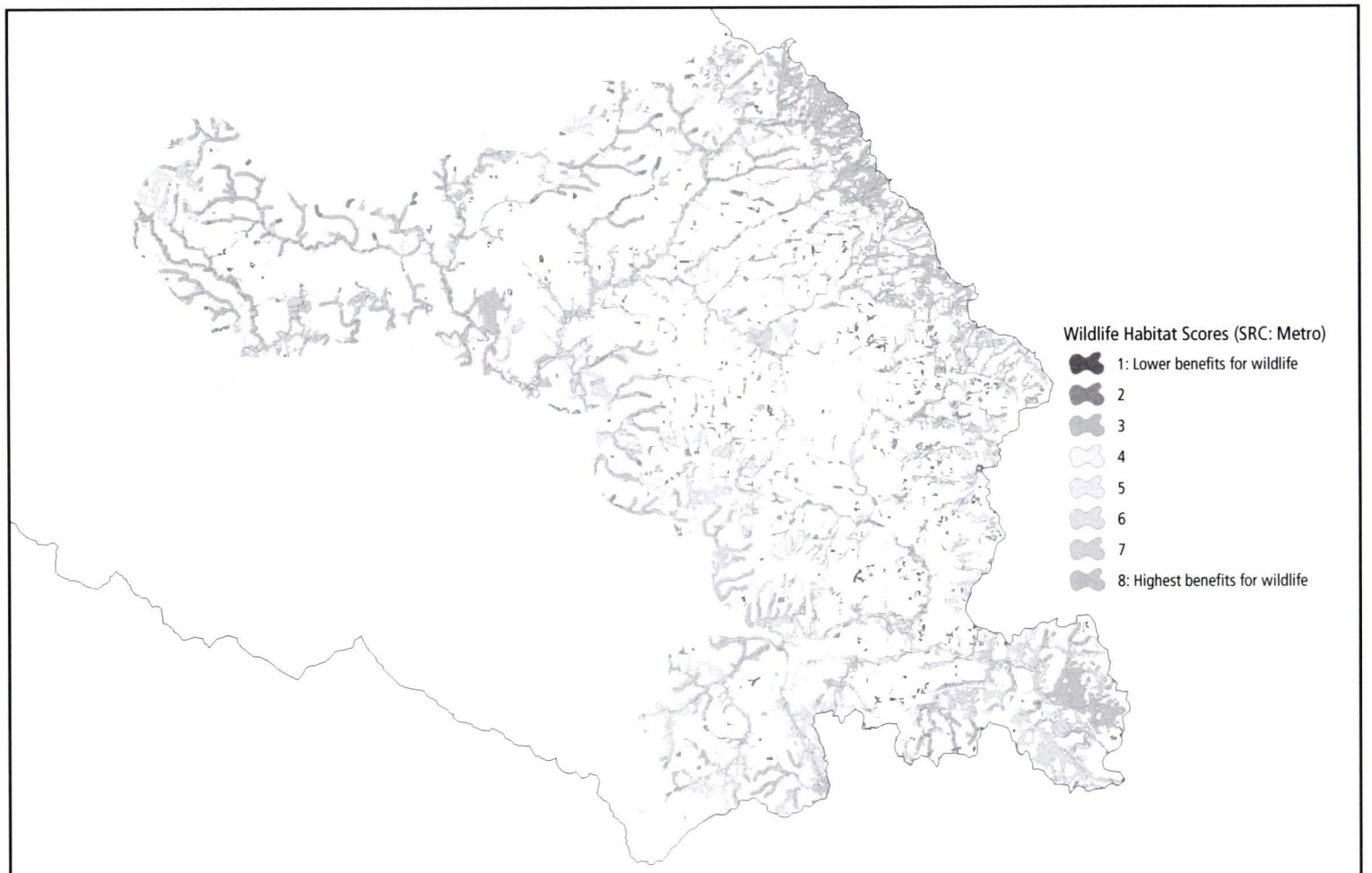

MAP II-16 Upland Habitat

ed. Section 4: Projects, Programs, and Priorities (in Part II) outlines the prioritization process for culvert repair and replacement.

Stormwater

Stormwater is a key factor in stream health. The management of stormwater quality and quantity influences the ability of a stream to absorb changes in water quality and hydrology. Although the District has made substantial advances toward reducing the impact of stormwater on streams, refinements to the existing program could be pursued. For the Healthy Streams Plan, the District focused on physical factors that influence stormwater quality, including outfalls that lack pretreatment facilities, watershed imperviousness and corresponding maintenance practices, and options for onsite quality management. The analysis of stormwater quantity focused on the existing design standards, watershed imperviousness, and options for onsite quantity management.

The inventory and analysis of the Tualatin Basin's stormwater system was limited to stormwater outfalls that discharge directly into the streams. Any stormwater outfalls observed during the stream inventories were located with the global positioning system (GPS), but the condition and conveyance capacity of the stormwater system were not evaluated. Local drainage master plans, city/county engineering, and field operations departments have the best available information about the condition and conveyance capacity of the piped stormwater system.

Culverts and Bridges

Culverts and bridges, and their corresponding roadway berms, represent the modern system of human passage over water-dominated environments. This public and private infrastructure alters the hydraulic and geomorphic functions of the river/stream channels and their associated floodplains. Although progress is being made to minimize the impact of such infrastructure on the water network, a substantial number of such structures exist throughout the Tualatin Basin. The County has over 3000 bridges and culverts within its jurisdiction alone. The analysis conducted for the Healthy Streams Plan represents only a fraction of the total number of structures and was not meant to be comprehensive because of limits in time, budget, and jurisdiction.

Culverts were evaluated for fish passage and adequate conveyance, using the output from the HEC-RAS models and the field inventory data. For fish passage, physical barriers (jump, entry, or culvert configuration issues) and hydraulic barriers (velocities or insufficient channel flow) were considered. Because many streams lack sufficient flows, the flow depth in the culverts appears to be a limiting factor for the passage of resident fish species that need to migrate during the summer and early fall. Map I-6 (in Part I)shows the locations of the 1,199 culverts and bridges that were evaluat-

Stormwater Quality

Clean Water Services and other jurisdictions throughout the country manage stormwater quality to limit its impact on surface water quality and aquatic species. Since 1991, the District has required stormwater to be pretreated before it is discharged into any surface waters. During the early fall rains, however, the "first flush" of pollutants can be readily observed from older highly urbanized and commercialized areas that lack pretreatment. These observations are consistent with the land use-based stormwater quality data gathered throughout the Portland metropolitan area in the early 1990s, which showed higher levels of total suspended solids and heavy metals in commercial, industrial, high-traffic areas than in residential or open space land uses (Woodward Clyde 1997).

In addition, surface water quality data gathered by the USGS (1999) along Beaverton Creek at Cedar Hills Boulevard (which drains older commercial, industrial, and residential areas) suggest that sediment quality may be impacting aquatic species. The USGS study found elevated levels of organochlorine pesticides, polyaromatic hydrocarbons, phthalates and phenols, PCBs, lead, zinc, and fish abnormalities relative to other sites in the watershed and in the Willamette Basin. Sediment data collected for a 2003 study confirmed the higher levels (in the highest 25 percent of urban areas

nationwide) of organochlorine pesticides, polyaromatic hydrocarbons, and phthalates at four sites on mainstem Beaverton Creek, and heavy metals at three out of the four sites (CH2M Hill 2003). Poor sediment quality is likely the combined result of historic contamination and continued pollutant loading from the highly urbanized environment surrounding the downtown Beaverton area. The pollutants are carried into the stream via stormwater runoff.

Highly urbanized areas that lack pretreatment are a high priority for stormwater quality management. As part of the District's initial NPDES stormwater permit application, the District identified 106 major outfalls (residential: 36"+ or drains 50+ acres, and commercial/industrial: 12"+ or drains 2+ acres) in 1991 and 1993. The improvement options for outfalls include end-of-pipe retrofits and/or enhanced sweeping and cleaning of lines that drain to the outfall. Those outfalls deemed to be of highest priority are included in Part I: Healthy Streams Action Plan, and shown on Map I-5.

Clean Water Services' design and construction standards address onsite stormwater quality management by requiring pretreatment facilities, erosion control, source control, and system operations and maintenance. Onsite facilities, inspection and enforcement, and system maintenance have been effective in preventing increases in surface water pollution in urbanizing watersheds. Rock Creek and its tributaries, which have undergone significant urbanization since the early 1990s, continue to exhibit improving water quality trends, based on DEQ's water quality index (Aroner 2002). Opportunities exist, however, to further improve stormwater pretreatment and maintenance. Table I-1 in Part I identifies maintenance practice refinements to address stormwater runoff and options for improved onsite structural controls that could optimize pollutant removal in high-load areas.

Stormwater Quantity

Clean Water Services manages stormwater quantity to reduce structural (building and road) flooding risk through the use of increased conveyance or stormwater detention to manage peak flows. Local small works projects have been highly effective in reducing nuisance flooding. Similar to many jurisdictions throughout the country, however, Clean Water Services' current standards do not address the cumulative effects of changes in the watershed's hydrologic regime that result from urbanization. Booth and Jackson (1997) found that existing stormwater regulations that focus only on reducing the magnitude of peak flows have been largely ineffective in protecting stream channels during urbanization, suggesting that new approaches are needed to manage stormwater quantity. Additionally, NOAA–Fisheries (2003) has produced an Endangered Species Act guidance document for analyzing stormwater effects that focuses heavily on managing stormwater quantity through approaches such as preserving forest cover, limiting watershed imperviousness, preserving riparian corridor, and matching flow rate to historic conditions.

Common field observations by Clean Water Services scientists and the biologists who performed the stream inventory in urban and urbanizing areas of the Tualatin River Basin are consistent with the findings of Booth and Jackson and NOAA-Fisheries. Scoured stream beds, limited channel diversity, the conversion of forested wetlands to reed canarygrass, and low to nonexistent stream base flows in the summer months are a few of the symptoms of an unhealthy hydrologic regime. Fortunately, opportunities exist to improve stream health by restoring a more natural hydrologic regime. These include refining onsite water quantity facility design and managing watershed imperviousness. Part I: Healthy Streams Action Plan, integrates these concepts into both capital projects and policy and program refinements.

Miscellaneous Pollutant Source Data and Analysis

The District assessed animal operations, septic systems, excess waterfowl and nutria populations, and residential landscape practices, using GIS data and limited field information. Education and awareness programs and improvements to residential landscape practices are included in Table I-1 in Part I. Nutria and waterfowl removal are assumed to be part of any capital enhancement project where they are present in excess, particularly in instream pond sites. Clean Water Services' Unsewered Areas Project is addressing septic systems, and the Tualatin Valley Soil and Water Conservation District is addressing animal operations.

Health Targets for Properly Functioning Stream Conditions

"Properly functioning condition" (PFC) is a qualitative method used by the Natural Resources Conservation Service (NRCS), Bureau of Land Management (BLM), and US Forest Service to assess the condition of riparian-wetland areas (NRCS 1998). The term PFC describes both the assessment and the condition. The assessment refers to a consistent approach for considering hydrology, vegetation, and geomorphic processes, while the condition refers to how well the physical processes are functioning. PFC is a state of resiliency that will allow a riparian-wetland area to sustain desired values of high water quality and habitat conditions.

A riparian-wetland area is considered to be in properly functioning condition when adequate vegetation, landform, and large woody debris are present to:

Table II-17: *Healthy Stream Targets By Reach Type*

	Sub-Goals	Parameters	Type 1 Low Gradient Headwaters	Type II High Gradient Headwaters	Type III Moderate Gradient Streams	Type IV Low Gradient Stream
Basin/Watershed	Drainage efficiency, Effective Impervious Area	EIA Percentage, Forest Cover Percentage per cumulative upstream watershed	<20% EIA, >30% FC	<10% EIA, >65% FC	<15% EIA, >50% FC	<20% EIA, >40% FC
	Riparian Reserves	Lands in subwatershed set aside for Sensitive Areas and Vegetated Corridors(VC)	RR^2 = Sensitive Area+Vegetated Corridor (ranging from 15-200 ft); 75% of stream length in subwatershed has VC >1 tree height potential			
Hydrologic Conditions	Barriers to Migration	# of barriers to reach spawning areas (steelhead, cutthroat)	0	0	0	0
	Base Flows	Minimum Q needed by cutthroat adults to survive summer low flows	Qfish = (8" min water cover) * (0.5*stream bed width) * (2.2 ft/s min velocity)			
	Peak Flows and Duration Timing	Percentage change in peak flows and duration from historic conditions	Q2 current< Q 10 historic, with comparable hydrograph peak and durations			
Geomorphic Conditions	Rosgen Channel Type3	Most common classification (could have other channel types in reach)	C, 5-6	A, 1-4	B 1-6	E, D 6
	Average Channel Slope	Water surface slope percentage	<2%	>4%	2-4%	<2%
	Channel Bed Composition	D-50 material	silt/clay	bedrock to gravel	bedrock to silt/clay	silt/clay
	Bankfull Width / Depth Ratio	Bankfull width/bankfull depth	>12	<12	>12	<12, >40
	Sinuosity	Stream length/valley distance	>1.2	1-1.2	>1.2	>1.5, na
	Riffle / Pool Frequency	Geomorphic channel character - bankfull width spacing	5-7 bankfull widths	1-2 bankfull widths	2-3 bankfull widths	5-7, channel widths
Riparian Conditions	Entrenchment / Floodplain connectivity	Floodprone area width / bankfull width	>2.2	<1.4	1.4-2.2	>2.2, na
	Bank Stability	Percentage stable channel banks; no more than 5% armored in any given reach	>90	>90	>90	>90
	Nonnative / Invasive Species	Average percentage at any given sample point	<10	<5	<15	<30
	Plant Community Diversity	Average percentage tree, shrub, groundcover along riparian area	70:50:90	80:70:100	80:50:90	70:60:100
	Canopy Cover	Average percentage canopy cover directly over stream	85%	95%	90%	85%
	Riparian Connectivity	Percent of riparian area breaks along the stream in the subwatershed	<10%	<5%	<5%	<10%
	Woody Debris Recruitment	Average number of trees >12" dbh per mile, within 25', per side of stream	>15	>50	>45	>35
Aquatic Habitat	Index of Biotic Integrity (Fish)	Mean IBI scores, in fish supporting systems	>40	>45	>45	>40
	Benthic Biotic Integrity (Macroinvertebrates)	Multimetric score (WQIW, 1999), not applicable in silt clay systems	NA	>40	>30	NA
	Pool Depth at Low Flow	Standard geomorphic estimate, with >3-foot holding pool every 3rd pools	2x riffle depth	2x riffle depth	2x riffle depth	2x riffle depth
	Pool Surface Area and Pool Cover	Percentage of total area with pool area and pool cover	>50%	>50%	>50%	>50%
	Riffle Depth at Low Flow	Adult cutthroat passage over riffle during low flow	6"	6"	6"	6"
	LWD Presence	Number of >12" diameter pieces, per mile	>20	>70	>60	>50
		Frequency	>2 bankfull widths	>2 bankfull widths	>2 bankfull widths	>2 bankfull widths
	Substrate Condition / Embeddedness	Embeddedness to apply only to streams with cobble/gravel	na	<20%	<20%	na
	Off Channel Habitat / Refugia	Number per mile	2	4	6	8
Water Quality[1]	Temperature	Degrees Celcius, 7-day moving average maximum temp for 8/1 - 9/30	15-17.8	9-13.8	9-13.8	10-17.8
	Dissolved Oxygen	mg/L, daily minimum DO levels acceptable for August 1 - September 30	>6.5	>8	>8	>6.5
	pH	Acceptable range	6.5-8.5	6.5-8.5	6.5-8.5	6.5-8.5
	Substrate Fouling / Algae Presence	Percent cover of film/algae on cobble / gravel in sample at low flow (Aug/Sept)	<10%	<5%	<5%	<10%
	Turbidity	NTU range	No more than 5 NTU > background, if < 50 NTU. No more than 10% increase over background, if > 50 NTU			
	Total Suspended Solids	Low flow median value May -October, High flow median value November - April	4,10	4,8	5,9	6,10
	Bacteria	Percentage of samples that meet water quality standards over year	80%	90%	90%	75%
	Phosphorus	Percentage of samples that meet TMDL May - October by stream (range is .04-.19 mg/L)	80%	90%	90%	75%
Fish & Wildlife Presence	Beaver / River Otter	Dominant aquatic mammalian species present	beaver	limited beaver	beaver/otter	beaver/otter
	Fish	Dominant species present (not including migration)	native resident, non trout	anadromous/resident trout	anadrom/resident trout	native resident , non trout
	Macroinvertebrates	Dominant tolerance level for conditions present	high tolerance	low tolerance	moderate tolerance	moderate tolerance
	Wildlife / Bird Abundance	Overall abundance relative to undistrubed rural sites	moderate	high	moderate	high

- **Dissipate stream energy associated with high flows.**
- **Filter sediment, capture bed-load, and aid in floodplain development.**
- **Improve floodwater retention and groundwater recharge.**
- **Develop root masses that stabilize streambanks.**
- **Develop diverse ponding and channel characteristics to provide the habitat and water depth, duration, and temperature necessary for fish production, waterfowl breeding, and other uses.**
- **Support greater biodiversity (NRCS 1998).**

When stream health is optimized, properly functioning condition can be achieved. It may not be possible however, to achieve PFC in all areas. NOAA-Fisheries has developed guidance that assigns ranges of criteria to classify streams as properly functioning, at risk, or not properly functioning (NOAA-Fisheries 1996). The criteria can be adjusted for unique watershed conditions.

The NOAA-Fisheries guidance identifies parameters to consider when determining how actions affect a species. These parameters can be used as indicators of stream health and condition:

- **Water quality (temperature, sediment/turbidity, chemical**

contamination/nutrients)

- **Habitat access (physical barriers)**
- **Habitat elements (substrate, large woody debris, pool frequency, pool quality, off-channel habitat, refugia)**
- **Channel condition and dynamics (width/depth ratio, streambank condition, floodplain connectivity)**
- **Flow/hydrology (change in peak/base flows, increase in drainage network)**
- **Watershed conditions (road density and location, disturbance history, riparian reserves)**

Clean Water Services used the NOAA-Fisheries guidance, along with stream inventory and reference reach data, to develop generalized health targets for the four stream reach types within the Tualatin Basin (Table II-19). The targets focus only on proper function, not at risk or not properly functioning conditions. Although all of the NOAA-Fisheries indicators are relevant to stream health and condition, not all are easy to define and measure. In addition, these parameters can vary along the stream system, from its headwaters to its confluence with other streams or the river. Clean Water Services therefore altered the NOAA-Fisheries guidance to account for the general reach type conditions observed along the streams in the Tualatin Basin.

The health targets focus on similar physical conditions of the watershed (effective impervious cover, hydrology) and of the stream network (geomorphology, riparian vegetation, and aquatic habitat) as the NOAA-Fisheries guidance. Parameters for water quality and fish and wildlife presence are included, but the high variability of the data collected for these parameters limits their value as targets. It is anticipated that if combinations of the targets are met, then water quality and aquatic species populations would be improved.

The order of the parameters (effective impervious cover, hydrology, geomorphology, riparian vegetation, and aquatic habitat) is important because it reflects the ecological underpinnings of system function. For example, vegetation cannot thrive without water, so addressing hydrology is a higher priority than addressing vegetation. In some cases, however, irrigation may be used to replace hydrologic function if restoring hydrology is exceedingly costly or will take a long time.

The health targets by reach type are not absolutes. Optimal health must be evaluated on a site–by-site, subwatershed-by-subwatershed basis. Adaptive management will focus on which combinations of targets and what degree of implementation are necessary to optimize system health.

Conclusions of the Environmental Analysis

Following the review of all the environmental data gathered during the planning process, some simple conclusions emerge regarding the needs of streams:

- **Streams need base flows, especially those that have the greatest fish-bearing potential.**
- **Streams need more shade. Riparian vegetation has not been actively regenerating in many areas of the basin because of changes in hydrology, invasive species, or ongoing disturbance.**
- **Streams need more structure. Large wood is the backbone of a stream system. It provides hydraulic roughness, encourages sediment deposition and scour, and triggers more frequent overbank events that recharge floodplain wetlands and groundwater.**
- **Streams need watersheds that mimic natural hydrologic regimes, even when developed, in order to reduce scouring clean stormwater runoff.**
- **Streams need fewer dams, poorly designed culverts, less property owner manipulation of the riparian zone.**

Successful watershed plan implementation will address the underlying causes of the system's inability to recover itself. Stream and watershed improvements will translate into improved water quality and aquatic species habitat. The challenge for Clean Water Services and its partners is to make needed adjustments on a range of scales, in order to effect change in a relatively short timeframe. Chapter 4: Projects, Programs, and Priorities, identifies improvement options specific to the watershed and stream conditions, and provides an initial prioritization of the options. Part I: Healthy Streams Action Plan, presents the refined priority list of projects and programs that will promote stream health in a cost-effective, socially acceptable manner. ■

Targets for water quality and aquatic species are difficult to assign. Water quality parameters and aquatic species diversity and abundance vary widely, even in pristine settings. Specific water quality standards may be useful guidance, but are too narrowly focused to account for all the ecosystem dynamics that take place in a stream or river. Streams and rivers that meet water quality standards may not be at optimal health. The Healthy Streams Plan strategy focuses on the whole system, not just on meeting water quality standards that may or may not achieve the desired environmental outcome.



Chapter
2.4

Projects, Programs and Priorities

The identification of project and program opportunities and their relative priority required the integration of the social, economic, and environmental information gathered throughout the watershed planning process. The analysis balanced the environment's physical parameters (land use, effective impervious area, hydrology, geomorphology, riparian vegetation, water quality, and aquatic habitat and species) with the socioeconomic values of the watershed community (clean water, clean air, open space, reasonable service fees, private property rights). Each watershed and stream has environmental and socioeconomic limitations and opportunities that were considered as the projects and programs were formulated and prioritized.

Identifying and prioritizing projects and programs was an iterative process that considered the relative level of improvement that can be achieved given the extent of impairment, the limits of scientific understanding of ecological recovery processes, and the social and economic resources needed to implement improvements.

The policy and program refinements identified in Table I-1 of Part I: Healthy Streams Action Plan, were not formally prioritized. The refinements predominantly build upon existing activities already underway. The new options will need to be explored and evaluated internally and with stakeholders before they are further developed and implemented. A schedule is provided (Table I-1A) to encourage progress on the policy and program refinements. It is recognized, however, that staffing, financial resources, and the public process will heavily influence the progress and outcomes of the options.

The capital projects identified in Tables I-2 through I-6 of the Healthy Streams Action Plan were prioritized through several means. The project prioritization began at a basin scale, where the stream reach's extent of potential recovery and departure from health targets were assessed. Watershed priorities for aquatic species, stormwater management, and flow restoration were also developed to focus actions where they would provide the greatest benefit. The information was then used to develop multiobjective "rules" for the enhancement options model called RESTORE (OSU 2003). The model determined the highest-priority enhancement techniques along each stream reach, given current condition. Because of their single focus, culverts and stormwater outfalls were evaluated and prioritized outside of the RESTORE model. District staff then applied the guiding principles developed by the Healthy Streams Advisory Committee and implementation feasibility analysis to develop the capital improvement list. Figure II-22 depicts the prioritization and project selection process. The remainder of the chapter discusses the process in detail.

Ecological Recovery Ranges

Ecological recovery of the Tualatin Basin could be realized if biological processes and species communities met the historic range of performance represented in reference reaches of the system. Unfortunately, changes in the watershed and water-related infrastructure have produced a landscape that is functionally different from pre-Euro-American settlement (OSU 1993b). These changes limit recovery potential in some areas. However, enhancing the biotic interactions among hydrology, geomorphology, water and soil chemistry, riparian vegetation, and native animal species in the watershed-conditions that profoundly shape all aspects of the ecosystem-are likely to advance stream health to varying degrees (OSU 1993c).

When assessing a system's potential to achieve optimal health or properly functioning condition (PFC), the watershed's historic conditions and current limiting factors must be considered. Where

Figure II-22

Watershed Planning Prioritization and Project Selection Process

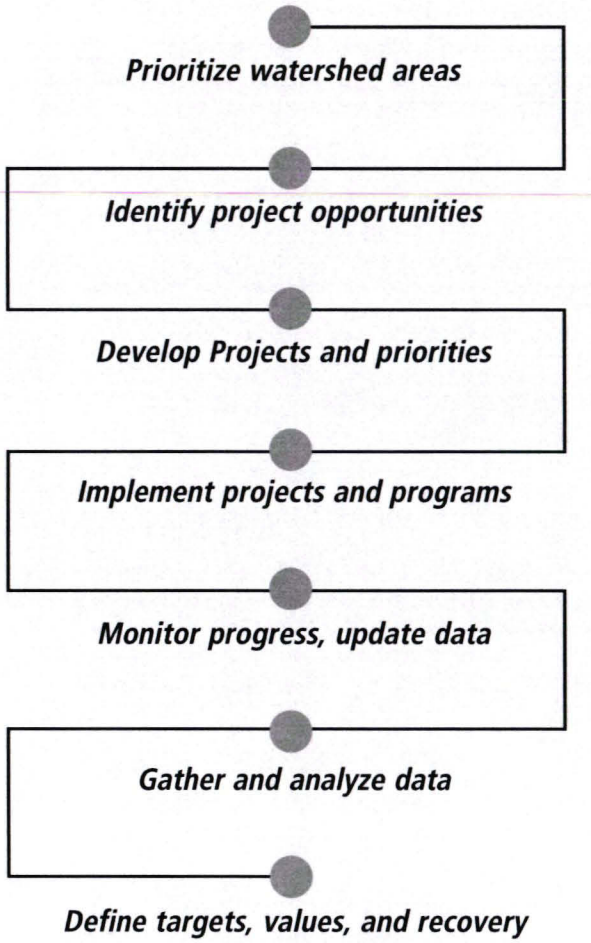

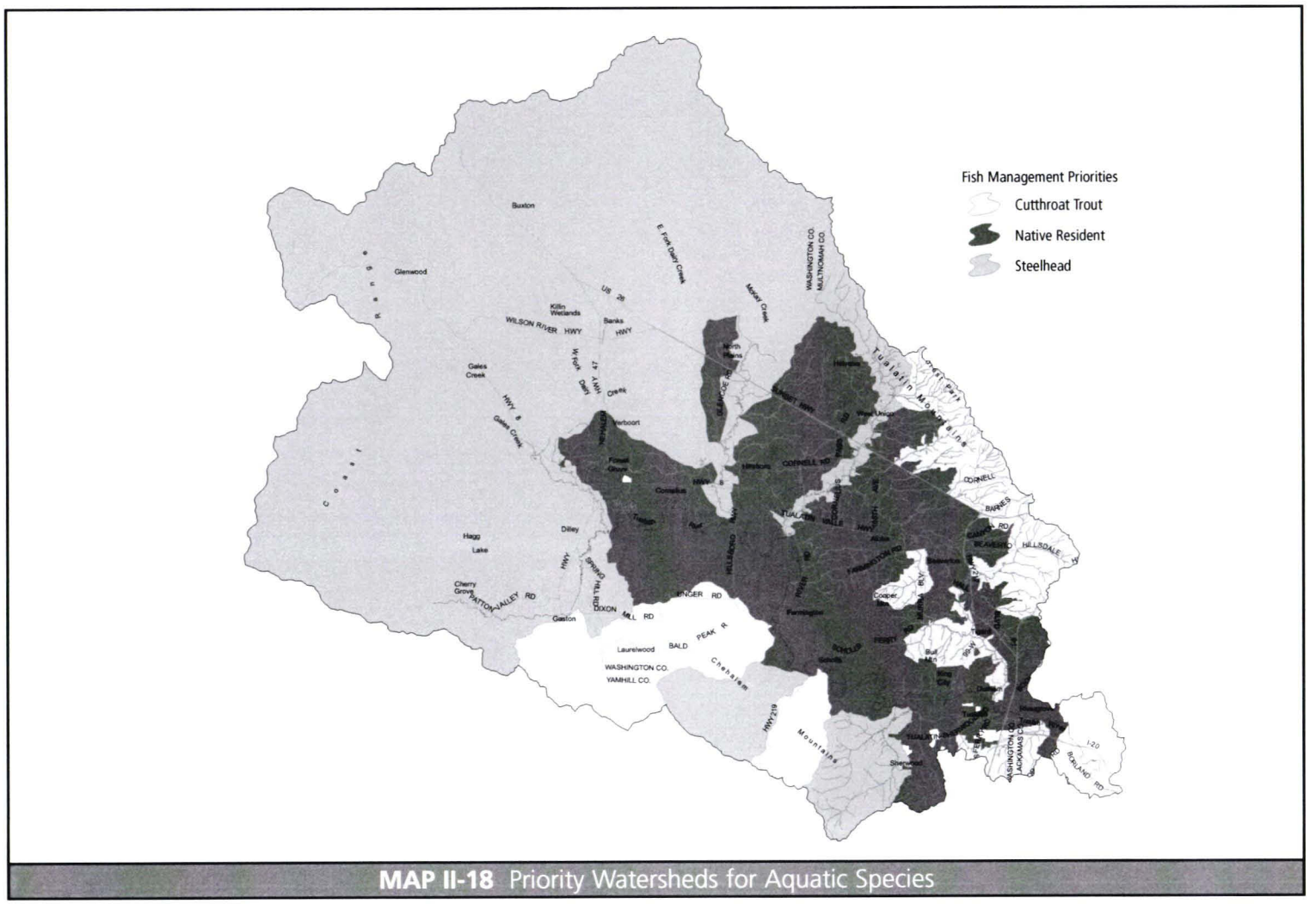

MAP II-18 Priority Watersheds for Aquatic Species

historic conditions have not been altered, the system's potential to maintain PFC is high. Watershed-altering activities, such as logging, agriculture, and urbanization, can reduce the system's potential to maintain or fully recover PFC. Some watersheds have overriding limiting factors that eliminate the system's potential to recover PFC. In that case, an artificial "desired condition" is developed to support a minimum set of socially based environmental values. This variable degree of stream health is called the watershed/stream health continuum and is depicted in Figure II-23.

The watersheds of the Tualatin Basin offer the full range of system potential, from achieving properly functioning condition to settling for a desired condition. PFC is possible for many of the rural watersheds where the landscape cover has not been dramatically altered. In the more suburban watersheds, it is practical to enhance system functions to encourage a positive trajectory toward PFC. In highly urbanized areas with significant limiting factors, a socially based desired condition may be a more reasonable approach. The concept of a "sliding scale" of management, based on the system's potential to achieve PFC, acknowledges the socioeconomic and environmental limitations of achieving full recovery in an already developed watershed.

The Healthy Streams Plan Advisory Committee responded to the continuum concept by suggesting that Clean Water Services and the watershed community:

- **Protect** streams where highly valued watershed functions are at or moving towards healthy stream targets.
- **Enhance** streams where improvements to watershed functions will help avoid further degradation and move the stream towards healthy stream targets.
- **Create** a new desired condition for streams where watershed functions are significantly impaired and not likely to fully recover, but could still support a variety of beneficial functions for the community.

Figure II-23 *Watershed-Stream Health Continuum*

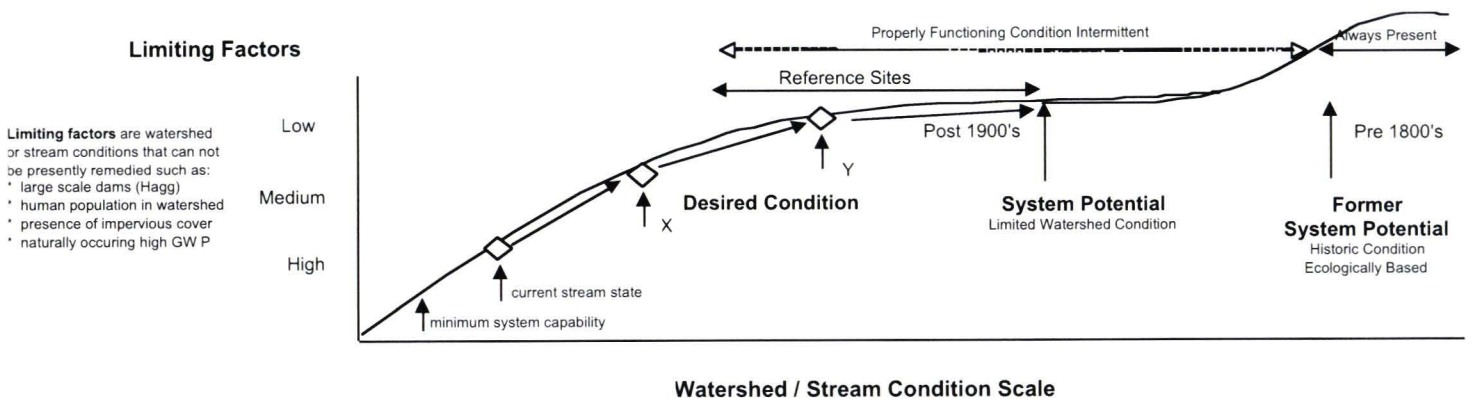

Desired Condition accounts for social / political, economic, and ecological factors impacting the stream
DC X = limiting factors prevent further progress up the scale
DC Y = limiting factors less of an issue

Studies by the University of Washington's Center for Water and Watershed Studies drew similar conclusions (Horner et al. 1997). The researchers suggest that the generalized pattern of physical habitat and biological change resulting from urbanization should be used to determine what management objectives and challenges would most likely apply to different situations (Figure II-24). Resources on the left side of the figure are functioning properly and of high value, but risk substantial modification with only minor changes in the watershed. The researchers recommend focusing on preservation in such undisturbed areas. They suggest intensively managing impervious area, stormwater runoff, and riparian areas, using some combination of extensive property owner incentives,

government purchase of the contributing areas, and transfer of development rights to already degraded watersheds. Resources on the right side of the figure have been impacted and probably cannot be recovered. Management in these areas should focus on enhancement actions that stem decline and maintain overall stream health. The researchers recommend enhancing ecosystem structure and function, especially in the riparian zone.

Acknowledging the difference between stream health targets and actual site conditions helps determine the feasibility of system recovery. By identifying the combination of physical elements (imperviousness, hydrology, geomorphology, riparian vegetation, and/or aquatic habitat) that are degraded, it is possible to focus on which elements need to be fixed, and in what order, to optimize benefits to water quality and aquatic species.

Protecting and enhancing stream reaches with fewer degraded elements ensures that the ecosystem services and benefits the reaches already provide are maintained and transported downstream. Enhancing a stream reach to prevent further degradation will bring greater and earlier environmental benefits than enhancing a stream that is already significantly altered in several parameters. For example, a stream that has no vegetation because of near-stream grazing, but is hydrologically and geomorphically stable, is an excellent opportunity for revegetation enhancement. Conversely, revegetation of a stream with no vegetation and extreme hydrologic and geomorphic changes would be much more costly and uncertain; the watershed conditions could prevent the vegetation from accessing water in the summer, and peak storm flows could uproot vegetation in the winter. Success is more likely when hydrologic and geomorphic constraints are addressed before revegetation occurs.

It is not feasible to entirely restore native ecosystems in the Tualatin Basin, given past disturbances and the dominance of limiting factors such as built environments and infrastructure. However, enhancing natural ecological processes can help reestablish basic ecosystem functions that are critical to maintain overall biodiversity and help achieve sustainable watershed conditions (Defenders of Wildlife 1998). Recognition of a range of "healthy streams" allows for appropriate allocation of resources for the greatest environmental benefit.

Watershed Prioritization

Based on the collective project information, certain watersheds and subwatersheds were identified as priorities for aquatic species habitat, stormwater management and stream base flows. The priority areas are part of the RESTORE model rules and help focus on the type of stream health improvements most appropriate to different watersheds.

Figure II-24 *Management Objectives Relative to Watershed Conditions*

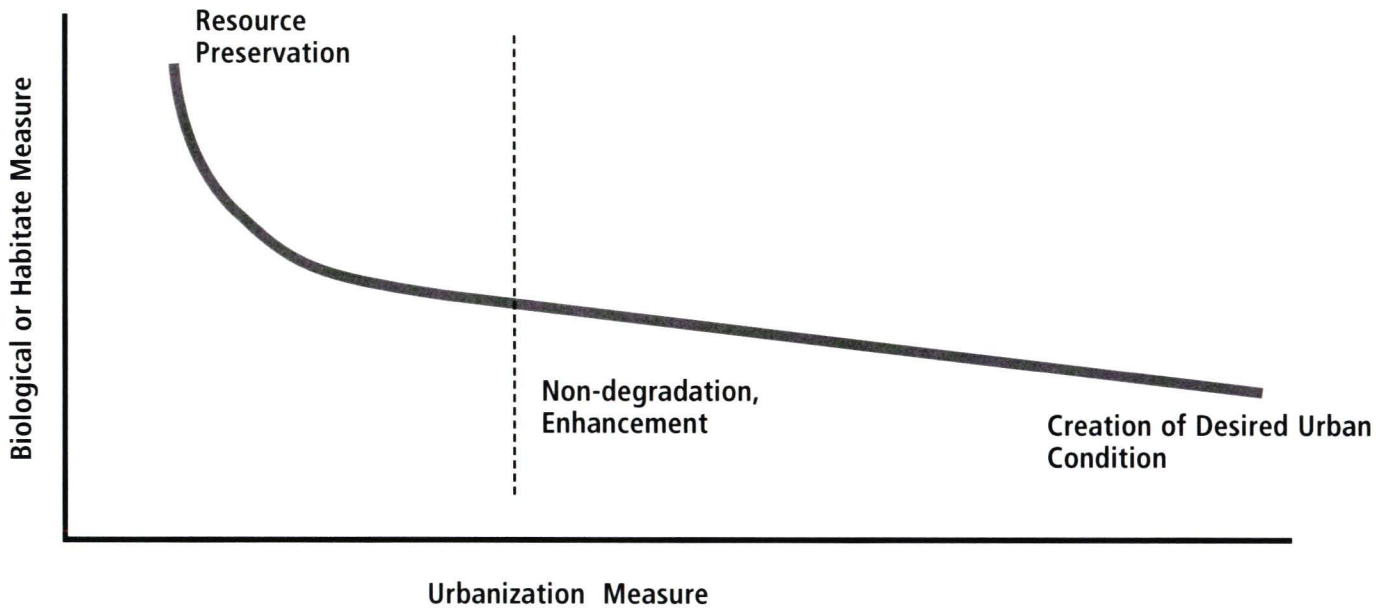

Aquatic Species

Aquatic species are the most sensitive beneficial use of surface waters. Fish and macroinvertebrates are bio-indicators of stream health; it is assumed that adequate water quality, water quantity, and habitat are available at a given location if highly sensitive aquatic species are consistently thriving there. Clean Water Services estimated the potential for sustaining selected fish and macroinvertebrate populations in various subwatersheds by using the data from the fish and macroinvertebrate studies, watershed imperviousness, stream channel characterizations, and the typical habitat needs of steelhead, cutthroat trout, other resident fish species, and macroinvertebrates. Map II-18 shows the priority areas for selected fish and macroinvertebrates. The map represents Clean Water Services' assessment of the species that could feasibly thrive in each subwatershed, given the historic and present conditions.

Stormwater Management

Stormwater quality and/or quantity management is probably a limiting factor for stream health in some subwatersheds within the study area. The effective impervious area (EIA), land use patterns, stormwater facility locations, stream inventory data, and water resource modeling were used to evaluate which subwatersheds are likely to be impacted by stormwater and could use additional man-

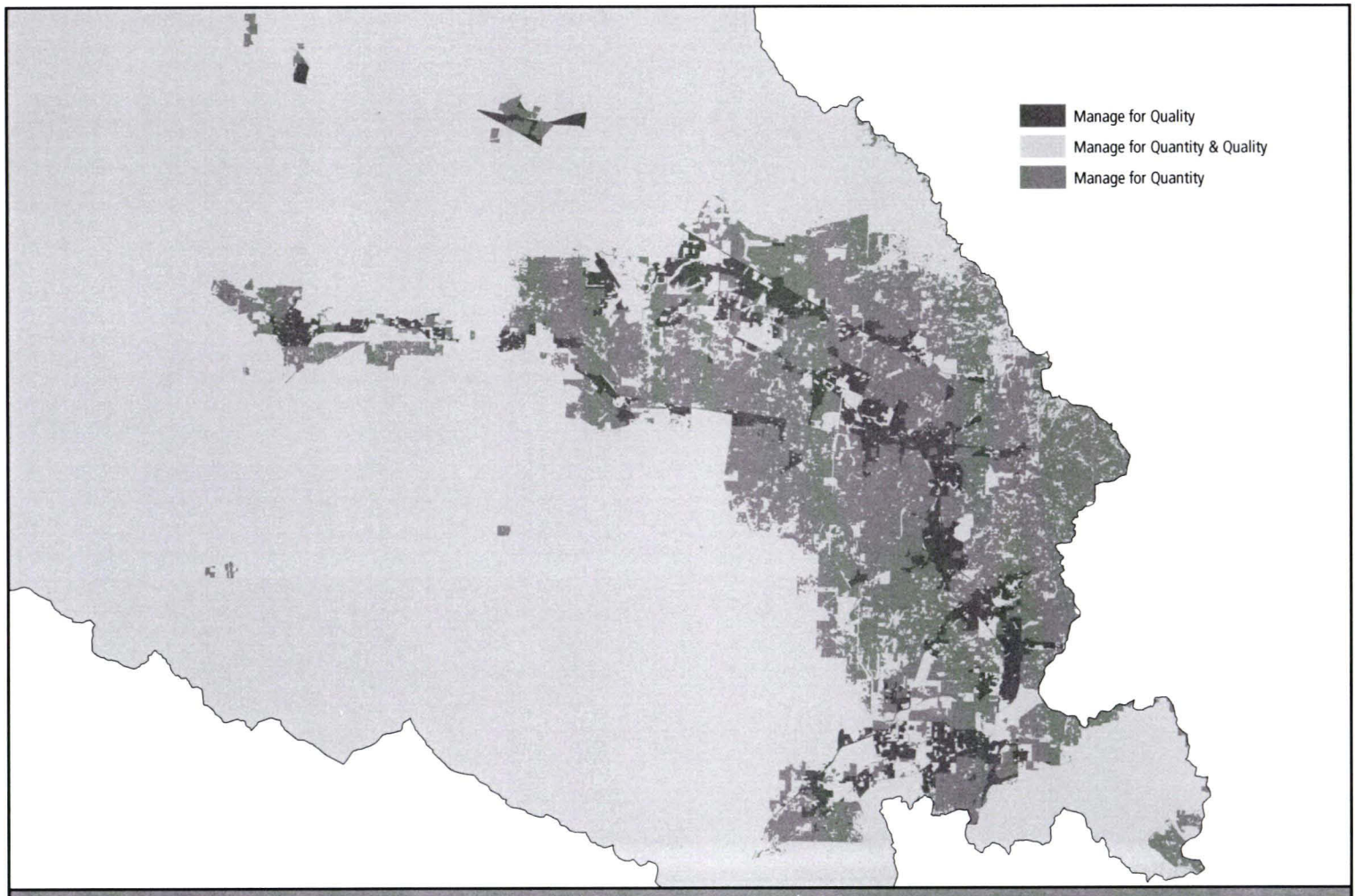

MAP II-19 Priorities For Stormwatch Management

agement or retrofit measures. Map II-19 shows the highest-priority subwatersheds for stormwater quality and quantity management.

For stormwater quality, the focus was on subwatersheds that are already degraded and need retrofits to minimize the discharge of contaminated stormwater to streams. Clean Water Services has required stormwater runoff pretreatment for all new development since 1991, but areas developed before 1991 do not have pretreatment to protect water quality. If such older areas have intense urban development, high traffic, and commercial and industrial land uses, they are likely to generate stormwater runoff that is more contaminated than runoff from other areas. These older, high-intensity land use subwatersheds are typically the highest priority for stormwater quality management.

For stormwater quantity, the focus was on watersheds that already have pretreatment facilities that could be retrofitted, where EIA is still below 25 percent, and/or where streams have not been fully scoured. Quantity management is a critical stream health issue throughout urban and urbanizing watersheds in the Tualatin Basin. Clean Water Services manages stormwater quantity for flooding and conveyance purposes only, using detention and culvert upgrades. The stream inventory data and hydrologic/hydraulic modeling support findings by NOAA-Fisheries and other Pacific Northwest research that streams are hydrologically and geomorphically altered by elevated storm peak flows. Stormwater quantity management addresses the channel-forming flows (less than 2-year storm events) that impact stream geomorphology in streams with good recovery potential.

In underdeveloped areas, subwatershed-specific management practices for stormwater quality and quantity are recommended as part of updates to design and construction standards (Part I, Table I-1). Reducing or minimizing increases in EIA based on priority areas and on other watershed and socioeconomic factors could improve the ways in which stormwater management is integrated into site designs.

Stream Base Flows

Stream base flows are probably a limiting factor for stream health, based on field observations during the inventory, gage data, water quality data, and water rights appropriation information. An analysis was conducted to determine which watersheds are the most over-appropriated and therefore potentially most lacking in summer flows. To accomplish this, summer low flows were assigned, based on gaged data at tributaries across the Tualatin Basin starting in 2002 (the first year that all 47 flow gages were online). The flow (in cfs) available at each water right's point of diversion in each of the watersheds was then totaled. The appropriated flow total was halved to estimate what amount of appropriated flow might actually be used. The formula used to calculate this is:

Summer low flow - _ of total appropriated flow = remaining flow

The watersheds that displayed negative remaining flows were then highlighted as the most water deficient. These basins were overlaid with fish habitat to determine those most critically in need of flow restoration. The over-appropriated basins with spawning and rearing habitat include McKay, Dairy, Gales, Upper Rock, Chicken, and Fanno Creeks. Map II-20 shows the priority watersheds for flow restoration.

Identification and Prioritization of Project Opportunities

Opportunities to improve watershed and stream health are innumerable. The challenge is to first determine which activities or strategies offer the greatest environmental benefit for the expected cost and are socially acceptable. The activities and strategies must then be proportioned and prioritized to advance stream health within the constraints of the watershed conditions and available implementation funding. The District used the RESTORE model (OSU 2003) and other analysis to help narrow the project options to a capital improvement plan list and to select policy/program refinements (identified in Part I: Healthy Streams Action Plan).

Preservation and Enhancement Projects

When the general public was asked to rate various surface water improvement strategies, the top three choices were planting trees, improving water flow, and expanding habitat and natural areas (Davis 2002). The more structurally oriented approaches (repairing and removing bridges, culverts, and pipes; relocating structures outside of flood zones to improve flood management) scored lower. The structural approaches may have been less favored because they address only a single objective, while the top choices achieve multiple objectives. However, all approaches have a role in improving stream health. The public's preference for natural solutions was integrated into the analysis of project opportunities.

Clean Water Services collaborated with Oregon State University's Bioengineering Department to adapt the RESTORE model for the Tualatin Basin to help prioritize stream preservation and enhancement projects. Lamy et al. (2002) describe RESTORE as follows:

> The model is a spatially explicit decision support tool designed to assist watershed planners in enhancement decision-making. RESTORE uses a rule-based structure to capture fundamental guidelines of enhancement to satisfy both site- and watershed-level goals. The general approach employs several key components. First, a geographic information system (GIS) is used to organize and manage spatially explicit datasets relevant to enhancement decision-making. Second, the program engine interfaces with the GIS datasets, identifies stakeholder goals, and then evaluates a range of enhancement alternatives at each site to determine optimal plans to address those goals. Finally, a series of spatially explicit watershed models are developed to determine if the generated enhancement plan satisfies stakeholder constraints and priorities.

The RESTORE model was specifically adapted for the Tualatin Basin to integrate various enhancement options with identified public preferences. Table II-20 lists the enhancement options, and the parameters used in RESTORE to set the "rules" for application of the options. Table II-21 lists the public values or goals and their corresponding objectives used in the RESTORE model. Each goal has a sliding scale of weight, and each individual objective can be turned on or off in the model. This allows the user to look at one, multiple, or all parameters. Based on the environmental analysis and public preferences, the three most widely used and preferred options are riparian corridor protection, instream flow restoration, and revegetation.

The RESTORE model is a useful iterative tool that allows Clean Water Services and stakeholders to visualize the Tualatin Basin from numerous perspectives. Stakeholders can weight specific objectives and explore the implications of these weights on enhancement planning. The rules that dictate the scoring of each enhancement option are

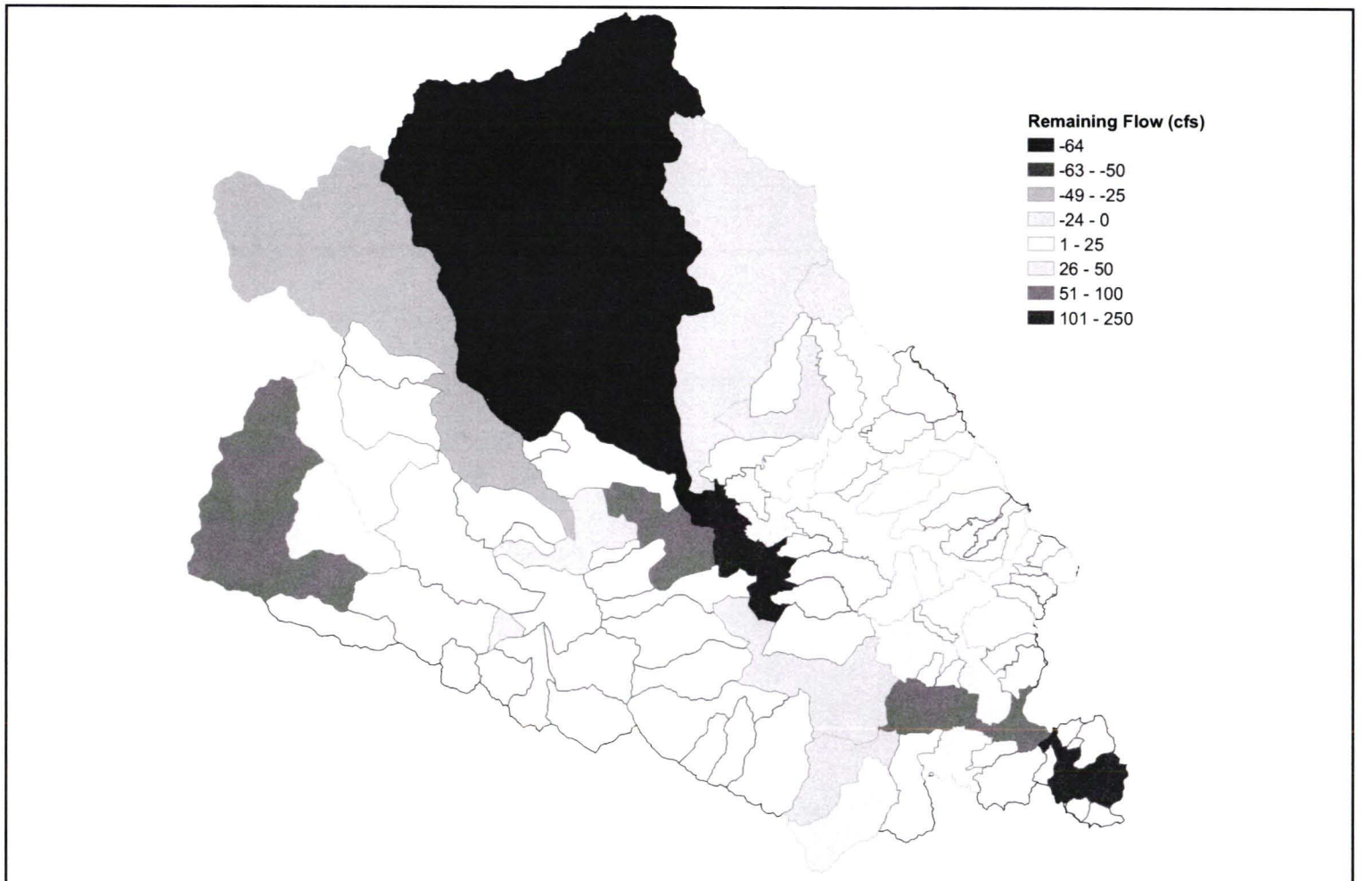

MAP II-20 Priority Watersheds for Base Flow Restoration

Table II-20: *Management Tools Used in RESTORE Model*

Preservation	The acquisition of surface water / conservation easements, or property from willing sellers, or negotiated stewardship agreements for the purpose of protecting high valued resources. This will include partnering with other organizations (land trusts, parks, etc) to assist with implementation.
Flow Restoration	The acquisition or trading of a water right to instream use from willing landowners in order to increase instream flows for fish and water quality. Depending on the site location and circumstance, the land owner my trade instream withdrawal for pipe irrigation or reclaimed water. This will include partnering with other organizations such as Water Trusts, Tualatin Valley Irrigation District, and Cities to hold the rights and help balance water supply needs.
Revegetation	The planting of native vegetation in near-stream corridors and the management of non-native invasive species.
Large Wood Placement	The replacement of dead trees and large pieces of wood in stream channels and on floodplains and wetlands to mimic natural conditions, stabilize grade, and create fish habitat.
In-stream Pond Adjustment	The removal of in-stream human-created obstructions that convert streams into ponds and unnaturally increased stream temperatures.
Channel and Wetland Enhancement:	
Channel Reconfiguration	The restoration of a stream channel back to its natural pattern and profile.
Bioengineered Bank Stabilization	The use of native vegetation, soil coir lifts, and re-grading to re-stabilize slopes without the use of hard-engineering.
Gravel/Boulder Placement	The replacement, improved capture, and or transport of gravels and boulders in stream beds that were naturally composed of these materials.
Off Channel Habitat	The creation of side channels, sloughs, and oxbows for fish habitat along streams and in floodplain areas where fish are likely to reside. These features address high or low water flow refugia and have variable designs to accommodate each type.
Source Management:	
Livestock	The exclusion of livestock exclusion via fencing streams, providing alternative water sources and providing adequate bridge crossings so that cows cannot and do not need to access the stream.
Streamside Property Owner Education	The education of streamside propery owners on the proper care of near stream areas.

Table II-21: *Public Values/Goals and Objectives used in RESTORE*

Goal	Objective
Improve water quality	Decrease temperature, increase dissolved oxygen, balance sediment and nutrient uptake, reduce toxics and bacteria
Improve water quantity management	Increase instream base flows, manage peak flow timing and duration to match pre-existing conditions
Improve aquatic habitat	Increase aquatic habitat for native fish and macro-invertebrates, increase upland and riparian/ wetland area habitat
Improve socio-economic conditions	Increase greenspaces and aesthetics, provide recreation and education, protect private property rights, reduce flooding impacts, maximize perceived cost benefit

readily available to stakeholders in an EXCEL spreadsheet and can be related to specific decisions. RESTORE displays the stream analysis process in a clear, logical, and transparent format. It also has a sensitivity analysis that examines how different scientific assumptions would affect the enhancement options recommended for a particular reach.

Map II-21 shows the results of RESTORE with the category "prioritize socioeconomic values" set at 75 percent of the scale and all other goals set at 100 percent. Table II-22 identifies the total number of miles of the various enhancement elements for the first, second, and third priorities for each stream reach. Map II-22 shows the locations of flow restoration, revegetation, land preservation, and geomorphic enhancement priorities.

In reviewing the maps, it is important to remember that hydrologic or geomorphic adjustments may be needed first in order to achieve the desired end product (such as revegetation) and to ensure the site is self-sustaining over the long term. Sites that need geomorphic repair are likely to require revegetation once the channel work is complete. The RESTORE model is a decision- making assistance tool, but does not replace the on-the-ground analysis of enhancement need, practicality, and order of implementation.

Outfall and Culvert Projects

Retrofit and/or repair of stormwater outfalls and culverts are often single-objective projects that do not fit well into the RESTORE model, but are still important to overall system function. The District used GIS data for land use, EIA, relevant stream conditions, water resource modeling, watershed priority status, and outfall/culvert location to determine which structures need attention. The final lists were then prioritized by jurisdiction and assigned to a multi-year improvement strategy, as outlined in Part I: Healthy Streams Action Plan.

When stormwater outfalls do not have pretreatment, they discharge contaminated runoff to streams. A survey conducted by the District in 1991-1993 identified 107 major outfalls that discharge directly to streams without any pretreatment. Of these, 81 drained a combination of commercial, industrial, residential, and/or transportation lands, and 26 drained strictly residential or vacant areas (Clean Water Services 1993). Given the findings relating stormwater quality to land uses (see Chapter 3), the 81 outfalls that drain potentially high loading areas were identified for retrofit and/or advanced maintenance practices (Map I-4 in Part I). The suggested order of priority was based on limited GIS information and field data (Appendix F). Further field analysis and other interrelated project opportunities may change the order of implementation, but not the list of outfalls that need attention.

The 1,043 culverts and bridges in the study area were evaluated to identify deficiencies and potential opportunities to improve conveyance and/or fish passage. Information used to determine the deficiencies included the hydrologic and hydraulic models and stream inventory data related to fish entry, exit, and flow conditions in the culvert. The model Fish Xing (Love et al. 2004) was used to determine the most critical factors for fish passage through culverts. The information from Fish Xing was translated into a separate Excel spreadsheet to complete the analysis, which revealed that 581 culverts/bridges have some kind of deficiency.

To further prioritize the culvert/bridge list, District staff identified environmental and economic criteria, including:

- **Culverts that potentially pass steelhead and cutthroat trout were assigned highest priority. A lower priority was assigned to culverts likely to support only native resident fish.**
- **Culverts located high in small, steep-gradient, intermittent headwater watersheds were assigned a lower priority, based on the limited potential for cutthroat or steelhead use.**
- **Culverts on major arterials and highways under ODOT's jurisdiction, and located in low-priority watersheds for aquatic species, were assigned a lower priority because of the high cost to upgrade them.**

Culverts were then categorized by whether they are conveyance barriers or fish barriers. No priority was assigned to these categories, but the differences were noted. Finally, fish barrier culverts were separated into those modeled during winter high flows as depth, velocity, or entrance-jump barriers, and those noted in the field as barriers during the summer low-flow season. Again, no priority was assigned to these two categories. A total of 383 culverts (32 percent of the 1,199 culverts and bridges surveyed) were determined to be a priority. These include 102 conveyance barriers, 178 potential fish barriers, and 38 combined conveyance/fish barriers. The local jurisdictions will need to assess the culvert list relative to their own capital programming to determine the order of implementation (Appendix F).

Project Implementation Feasibility and Prioritization

The RESTORE model can identify the most appropriate enhancement options and prioritize them along the various stream reaches, but has limited ability to account for the feasibility of implementation. After the options were identified and prioritized based on site conditions, therefore, a second tier of prioritization was conducted to include implementation feasibility. The District reviewed the guiding principles provided by the Advisory Committee and integrated the following factors into the second prioritization process:

- **Benefits water quality and/or aquatic species - addresses clearly visible issue.**
- **Has connectivity to other projects or features.**
- **Partnership opportunities exist/property owners willing to participate.**
- **Self-sustaining once established/high likelihood of success.**
- **Construction feasible and affordable - site access/project difficulty/permitting.**
- **Long-term environmental benefits exceed short-term costs.**
- **Project can be adequately proportioned to promote economies of scale/lower cost.**

These factors were used to further evaluate the projects under the major improvement categories (flow restoration, revegetation, land preservation, geomorphic enhancement, stormwater outfalls/culverts) and develop the proposed capital projects program presented in Part I: Healthy Streams Action Plan.

Flow Restoration

Using the RESTORE model, the need for flow restoration was identified along 152 miles of stream corridor. A supplemental review of water rights and flow data identified that the most over-appropriated watersheds with spawning and rearing habitat were McKay, Dairy, Gales, Upper Rock, Chicken, and Fanno Creeks. The water quality (temperature and dissolved oxygen) of the streams in these watersheds was also evaluated against current water quality standards.

Water-deficient streams with a high potential for fish habitat but low water quality became the focus of potential flow restoration projects. Infrastructure maps were overlaid to see if opportunities exist to use the existing pipe system to engineer flow back into tributaries. Reuse and irrigation lines offer the possibility for water exchange. Large water diversions were examined to see if there were possibili-

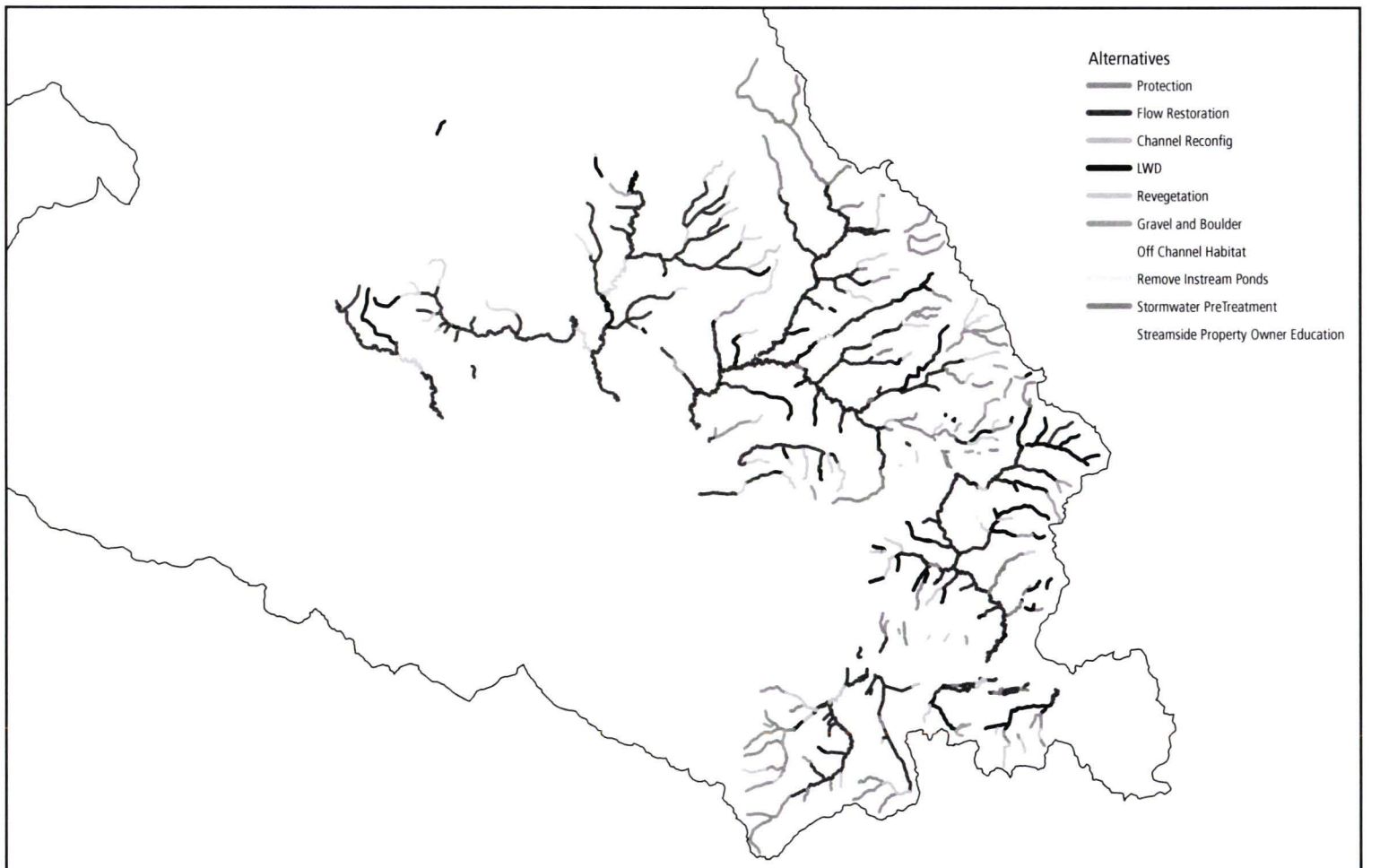

MAP II-21 Total Priority Results of RESTORE

Table II-22: *Total Miles of RESTORE Determined Enhancement Activity*

Best Management Practices	First	Second	Third	Total
Preservation (200' width /stream side)	46.5	4.8	0.5	51.8
Flow Restoration	148.9	17.0	4.0	169.8
Revegetation	47.5	55.4	38.2	141.1
Large Woody Debris	60.4	123.4	43.4	227.1
Instream Pond Adjustments	1.1	3.6		4.7
Channel and Wetland Enhancement:				
Bioengineering			0.2	0.2
Gravel and Boulder	9.7	8.8	1.9	20.4
Off Channel Habitat	2.1	5.2	2.8	10.1
Channel Reconfig	0.2	5.2	4.7	10.0
Source Management:				
Livestock			1.7	1.7
Streamside Property Owner Education	3.0	15.6	21.0	39.6
Total	**319**	**239**	**118**	**676.5**

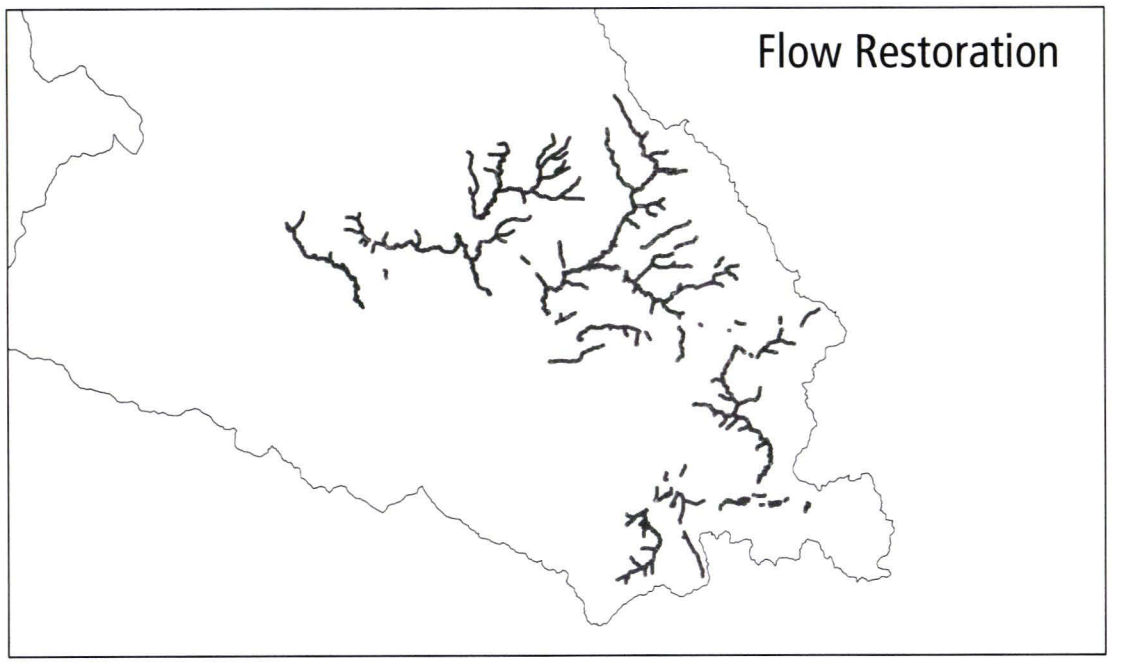

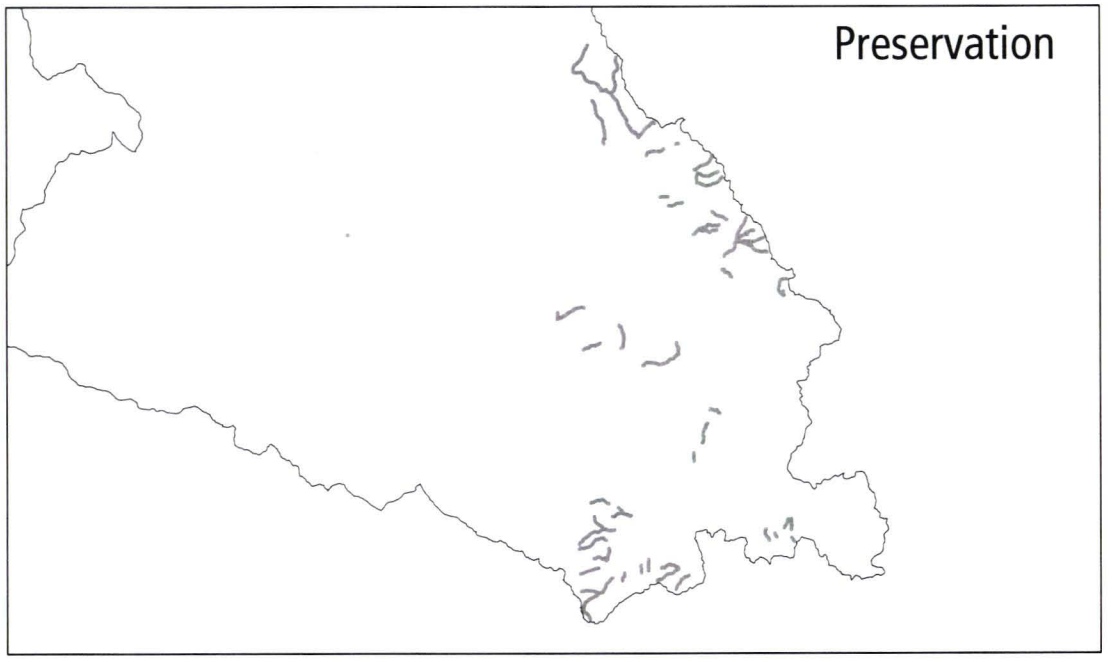

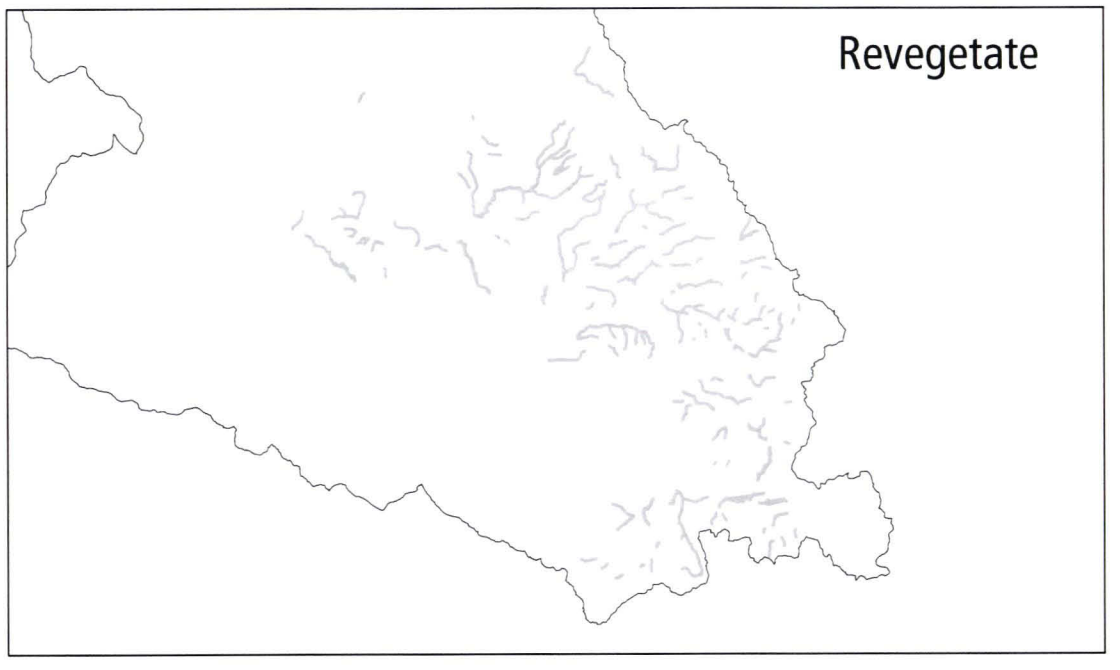

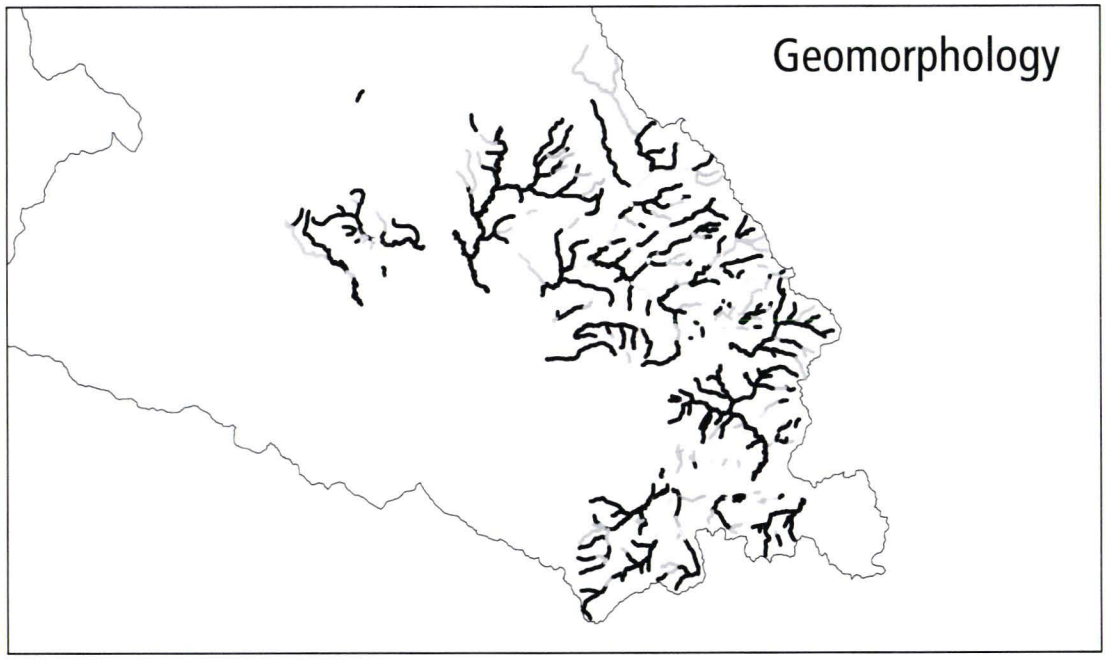

MAP II-22 RESTORE Alternatives

ties for water exchanges or willing sellers of water rights. From this analysis, several potential flow restoration projects, influencing 57 miles of stream, were identified as priorities.

Revegetation

Using the RESTORE model, the need for revegetation was identified along 48 miles of stream corridor. Inventory data confirm that the loss of vegetation impacts streams of all sizes. The District therefore gave priority to multi-scaled efforts to ensure that smaller headwater and tributary streams receive a share of enhancement proportionate to that of the mainstem systems.

Revegetation that local schools, churches, neighborhood associations, stream friends groups, and cities can implement along small streams (less than 5 feet wide) and on public lands is the high-priority target for the Community Tree Planting Challenge outlined in Part I. Because exact planting locations often depend on opportunities

that arise, the District developed a performance standard of "number of trees planted" per year for each jurisdiction. This will encourage steady planting progress, while providing flexibility of location. Under the Community Tree Planting Challenge, a total of 34 miles of stream is proposed to be revegetated over 20 years.

Revegetation projects along mainstem streams are also a priority in locations where they link to other projects in the capital improvement program, link to other high-quality resource areas, or are a part of geomorphic improvement projects. Revegetation coordinated by the District will focus on larger-scale, multi-objective projects that have more complex technical, permitting, and access issues.

Corridor Preservation

Using the RESTORE model, the need for corridor preservation was identified along 47 miles of stream. Preservation is proposed for sites that are properly functioning or have relatively little impairment. Because the locations for corridor preservation are predominantly outside the District's jurisdiction, partnerships will play a major role in implementation. The Stream Partnership Opportunities Technical Advisory Committee (SPOTAC) is working with rural land owners to encourage conservation and enhancement activities in the identified priority areas, as well as in other locations. To avoid overlap with these developing SPOTAC programs, the preservation priorities in the Healthy Streams Plan focus on property owners along the rural/urban interface who are not eligible for or choose not to participate in existing farm or forestry conservation programs. The watersheds where preservation strategies will be pursued include Chicken-Cedar and Upper Rock Creeks and represent approximately 5.5 miles of stream corridor.

Geomorphic Enhancements

Using the RESTORE model, enhancement needs involving the restoration of large wood to streams, bioengineering, channel re-meandering, off-channel habitat creation, and instream pond modification were identified for 66 miles of stream. The District focused attention on watersheds where multiple projects have been implemented or proposed by the District and others, where the improvements could prevent further stream decline, and at specific instream pond sites known to have water quality problems. The priority projects cover approximately 45 miles of stream corridor and most are in the District's 2005-2009 capital improvement program. Additional projects will be added as projects are completed, following the same strategy.

Stormwater Outfalls / Culverts

A total of 68 stormwater outfalls and 383 culverts were identified as needing repair or retrofit. The number of outfalls and culverts in each jurisdiction was determined, and performance target were assigned for each year until all the deficiencies are addressed. The local jurisdictions will determine the order of priority for addressing the outfalls and culverts. When possible, the projects should be implemented in conjunction with existing road upgrades, stream enhancements, or redevelopment activities. By focusing on a performance target rather than specific site locations, the program remains flexible, but accountable.

Conclusions of the Projects, Programs, and Priorities Identification

The Healthy Streams Plan and its implementation success are dependent upon fostering a diversity of actions throughout the study area that promote stream and watershed health. Over the years, as projects are implemented and their effectiveness evaluated, the Plan will be adjusted. The RESTORE model will be re-run to determine changes in priorities as resources are enhanced or otherwise changed. Some projects may drop from the lists, others added. However, the intent is to remain consistent with the principles developed through this planning process.

Part I the Action Plan highlights a 20 year program, with specific goals and performance targets. As the District, Cities, County and other partners implement the various projects, programs and policies, they will inevitably change. This watershed plan gives implementers the flexibility to plan for a better future and be smarter tomorrow. ■

Thinking is easy, acting difficult, and to put ones thoughts in action, the most difficult thing in the world.

Goethe

Part
3

Literature and Appendices

LITERATURE CITED

ABR, Inc. Michael B. Cole (ed). November 2000. Assessment of Macroinvertebrate Communities of the Tualatin River Basin; Final Report. Unpublished report for Unified Sewerage Agency and Tualatin River Watershed Council. 15pp and 4 apps.

ABR, Inc. Michael B. Cole (ed). April 2002. Assessment of Macroinvertebrate Communities in Relation to Land Use, Physical Habitat, and Water Quality in the Tualatin River Basin, Oregon: Final Report. Unpublished report for Clean Water Services. 30 pp and 2 apps.

Aroner, Eric R. of WQHYDRO Consulting. June 2002. Tualatin River Basin Water Quality Status and Trends Report 2001. Unpublished report for Clean Water Services. 191pp.

Aroner, Eric R. of WQHYDRO Consulting. June 2002. Tualatin River Basin Tributary Water Quality Status and trends Report 2001. Unpublished report for Clean Water Services. 222pp.

Benson, Robert L. 1975. The Glittering Plan, Land of Tuality. Virginia E Moore (ed). Washington County Historical Society; Washington Co, OR.

Benson, Robert L. 1978. The Tualatin River Mile by Mile, Land of Tuality. Virginia E. Moore(ed). Washington County Historical Society; Washington Co, OR.

Bisson, Peter A., Thomas P. Quinn, Gordon H. Reeves and Stanley V. Gregory. 1992. Best *Management Practices, Cumulative Effects and Long Term Trends in Fish Abundance in Pacific Northwest River Systems* published in Watershed Management: Balancing Sustainability and Environmental Change. Robert Naiman (ed). Springer-Verlag, NY, Article 7: 189-232

Booth, Derek B., David R. Montgomery, and John Bethel. 1997. *Large Woody Debris in Urban Streams of the Pacific Northwest* published in Effects of Watershed Development and Management on Aquatic Ecosystems. L.A. Roesner (ed.). pp. 178-197

Booth, D.B. and C.R.Jackson. 1997. Urbanization of Aquatic Systems: Degradation Thresholds, Stormwater Detection, and Limits of Mitigation. Journal of American Surface Water Association 33(5): 1077-1090.

Bureau of Land Management, Forest Service, and Natural Resources Conservation Service. 1998. Riparian Area Management: A User Guide to Assessing Proper Functioing Condition and the Supporting Science of Lotic Areas. Technical Reference 1737-15.

Castelle, A J., A.W. Johnson, and C. Conolly. 1994. Wetland and Stream Buffer Size Requirements – A Review. Journal of Environmental Quality 23 (5): 878-882.

CH2M Hill. May 2003. Beaverton Creek Stormwater Contaminant Reduction Plan – Draft.

Clean Water Services. Kendra Smith (ed). 2000. Tualatin Basin Rapid Stream Assessment Technique. Unpublished. 18 pp and apps. Modified application of the Rapid Stream Assessment Technique developed by John Galli of the Metropolitan Council of Governments, Washington DC.

Clean Water Services. 1993. NPDES MS4 Permit Information. Table 3-2b Major Outfalls Without Dry Weather Flow, Table 3-2b Major Outfalls With Dry Weather Flow, and Table 2-3c Additional major Outfalls.

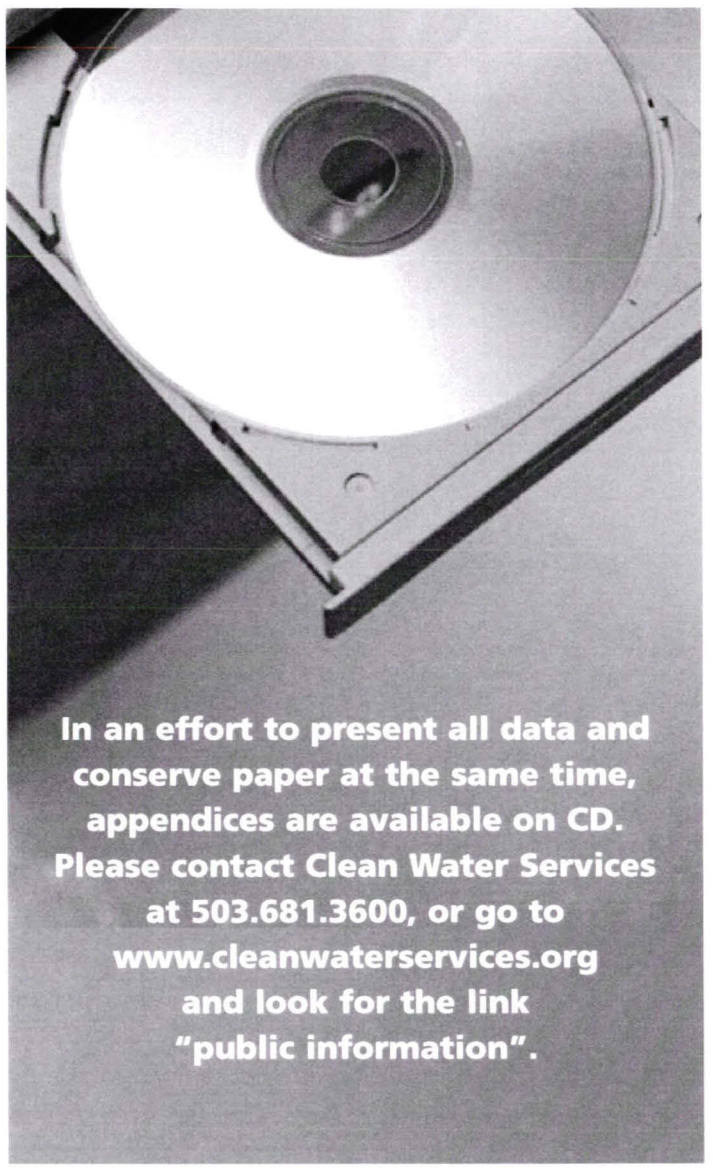

Clean Water Services. 2002. Tualatin River Flow Management Technical Committee 2002 Annual Report. 33pp and 9 apps.

Clean Water Services. 2004. Personal communications regarding flow augmentation and temperature management with District staff including: Bernie Bonn, Jan Miller, and Nate Cullen. Values provided in the Flow Management Report cited above.

Clean Water Services.2004. Budget in Brief for FY 2004-2005.

Cortwright, J. of Impresa, Inc. June 2002. Westside Economic Study Final Report. Unpublished report for the Westside Economic Alliance. 50 pp

Creech, Jason. 2003. Masters Thesis. Urbanization and its Relationship to Water Quality with the Bronson Creek Watershed. Portland State University. 83 pp.

Davis, Hibbits and McCaig. September 2002. Healthy Stream Plan: Public Values. Unpublished report for Clean Water Services. 41pp.

Defenders of Wildlife. 1998. Oregon's Living Landscape: Strategies and Opportunities to Conserve Biodiversity. Findings of the Oregon Biodiversity Project sponsored by Defenders of Wildlife, The Nature Conservancy, and the Oregon Natural Heritage Program. Oregon State University Press Corvallis, OR. 218pp.

Department of Water Resources – Washington County Watermaster. 2004. Personal communication with Bob Wood.

Dietrich, William. 1995. Northwest Passage: The Great Columbia River. Simon & Schuster, New York. p120-131.

Farnell, James. 1978. Tualatin River Navigability Study. Division of State Lands Publication. Salem OR.

Franklin, Jerry F. 1992. *Scientific Basis for New Perspectives in Forests and Streams* published in Watershed Management: Balancing Sustainability and Environmental Change. Robert Naiman (ed). Springer-Verlag, NY, Article 3: 25-72

FEMA. 2004. Personal communication with Joe Weber, Region X FEMA representative for the Tualatin Basin.

Gregory, S.V, F.J. Swanson, W.A. McKee and K.W.Cummins. 1991. An ecosystem perspective of riparian zones. Bioscience 41:540-551

Horner, Richard R., Derek B. Booth, Amanda Azous, and Christopher May. 1997. *Watershed Determinants of Ecosystem Functioning* published in Effects of Watershed Development and Management on Aquatic Ecosystems. L.A. Roesner (ed.). pp 251-274

Henshaw, P.C., and D.B Booth. 2000. Natural Restabilization of Stream Channels in Urban Watersheds. Journal of American Surface Water Association 36(6):1219-1236

Johnson, Alan and Diane M. Ryba. 1992. A Literature Review of Recommended Buffer Widths to Maintain Various Functions of Stream Riparian Areas. Report prepared for King County Surface Water Management Division. 29pp.

Kurahasi and Associates, Inc. 1996. Fanno Creek Watershed Management Plan prepared for Clean Water Services.

Lamy, F., J. Bolte, M. Santelmann, and C. Smith. 2002. Development and Evaluation of Multiobjective Decision-Making Methods for Watershed Management Planning. Journal of the American Water Resources Association. 38(2) 517-529.

Lee, Robert G. 1992. *Ecologically Effective Social Organization as a Requirement for Sustain Watershed Ecosystems* published in Watershed Management, Balancing Sustainability and Environmental Change. Robert J. Naiman (ed). Springer-Verlag. NY. Article 4: 73-90

Lee, Robert G., Richard Flamm, Monica G. Turner, Carolyn Bledsoe, Paul Chandler, Collette DeFerrari, Robin Gottfried, Robert J. Naiman, Nathan Schumaker, and David Wear. 1992. *Integrating Sustainable Development and Environmental Vitality: A Landscape Ecology Approach* published in Watershed Management, Balancing Sustainability and Environmental Change. Robert J. Naiman (ed). Springer-Verlag. NY. Article 20: 499-521

Love, Michael, Susan Firor, Michael Furniss, Thomas Dunklin, Antonio Llanos, Bob Bubernick, Ross Tayler, Stan Glowaki, Natalie Cabrera. 2004. FishXing version 2.2. available via website at www.stream.fed.us/fishxing. Free software sponsored by US Forest Service, US Department of Agriculture, Federal Highway Administration, and others.

May, Christopher W., Richard R Horner, James R Karr, Brian W. Mar, and Eugene B Welch. 2000. *Effects of Urbanization on Small Streams in the Puget Sound Ecoregion* in The Practice of Watershed Protection. Tom Schueler(ed). Center for Watershed Protection, Washington, DC. Article 18: 87-98

MGS Engineering Consultants. 2001. Development of Design Storms for the Portland Oregon Area. 19 pp.

Munch, Ernest. 1990. First Federal Township Survey Maps of 1852, redrawn for the Metro Region 2040 Project.

McCafferty, W. Patrick. 1998. Aquatic Entomology. Jones and Bartlett Publishers, Inc. Boston, MA. 448pp.

McKenzie-Mohr, Doug and William Smith. 1999. Fostering Sustainable Behavior: An Introduction to Community Based Social Marketing. New Society Publishers. Gabriola Island, British Columbia, Canada. P.160

Metro. May 2001. Public Values and Livability Survey.

Metro. 2001. Fish and Wildlife Species List for the Portland Metropolitan Area.

Metro. 2002. Metro's Riparian Corridor and Wildlife Habitat Inventories. Preliminary Draft – Technical Paper. 249 pp

MWH. 2004. Tualatin Basin Water Supply Feasibility Study Final Report. Pp. 78

Naiman, Robert J., Timothy J. Beechie, Lee E.Benda, Dean R. Berg, Peter A Bission, Lee H MacDonald, Matthew D O'Connor, Patricia L Olson, and E. Ashley Steel. 1992. *Fundamental Elements of Ecologically Healthy Watersheds in the Pacific Northwest Coastal Ecoregion* published in Watershed Management: Balancing Sustainability and Environmental Change. Robert Naiman (ed). Springer-Verlag, NY. Article 6: 127-188

National Oceanic and Atmospheric Administration – Fisheries. August 1996. Appendix II: Making Endangered Species Act Determinations of Effect for Individual or Grouped Actions at the Watershed Scale (Matrices of Pathways and Indicators) in Coastal Salmon Conservation: Working Guidance for Comprehensive Salmon Restoration Initiatives in the Pacific Coast. September 15, 1996.

National Oceanic and Atmospheric Administration – Fisheries, Northwest Region. March 2003. ESA Guidance for Analyzing Stormwater Effects. 48pp and apps.

Nygren, Tom and Washington County Small Woodlands Association. 2003. A Green Tapestry, The Small Woodlands of Washington County: Results of a Survey. 41pp.

Oregon Climate Service. 2004. website information.

Oregon Department of Fish ad Wildlife. Davis L Ward (ed). June 1995. Distribution of Fish and Crayfish and Measurement of Available Habitat in the Tualatin River Basin: Final Report 1993-1995. Unpublished report for Unified Sewerage Agency (Clean Water Services). 49pp and 5 apps.

Oregon Department of Fish and Wildlife. Kevin A. Leader(ed). December 2001. Distribution of Fish and Measurement of Available Habitat Outside the Urban Growth Boundary: Final Report 1999-2001. Unpublished report for Tualatin basin Watershed Council. 19pp and 4 apps.

Oregon Department of Fish and Wildlife. Kevin A. Leader (ed). May 2002. Distribution of Fish and Crayfish and Measurement of Available Habitat in the Tualatin River Basin: Final Report 1999-2001. Unpublished report for Clean Water Services. 25pp and 4 apps.

Oregon State University. 1992. Land Use and Nonpoint Source Phosphorous Pollution in the Tualatin Basin, Oregon: A Literature Review. Written by Donald W. Wolf. Surface Water Research Institute. Tualatin River Basin Surface Water Management Report No. 1.

Oregon State University, 1993a. The Historical Tualatin River Basin. Written by Penny L Cass and J. Ronald Miner. Surface Water Research Institute. Tualatin Basin Surface Water Management Report Number 7. 59pp

Oregon State University, 1993b. Landscape Change in the Tualatin Basin Following Euro-American Settlement. Written by David D. Shively. Surface Water Research Institute. Tualatin Basin Surface Water Management Report Number 6. 19pp

Oregon State University, 1993c. Issues Surrounding the Biota of the Tualatin River Basin.. Written by Judith Li and Steanley V Gregory. Surface Water Research Institute. Tualatin Basin Surface Water Management Report Number 8. 37pp

Oregon State University. Ariana Henning (ed). August 2003. RESTORE: User and developers guide for the Tualatin Watershed. 36 pp.

Oregon State University Extension Economic Information Office. 2004. Agricultural Commodity Sales Washingtion County for 2003 via fax transmittal.

Pacific Water Resources. 2004. Personal communication and review of documentation of ongoing efforts provided by Phil Pommier and Roger Sutherland.

Pacific Water Resources. May 2003 Revised. Estimated Flood Peak Discharges of the Tualatin River. Unpublished report for Clean Water Services for the Tutalain Basin Floodplain Remapping Project. 9pp and 14 figures.

Pacific Water Resources, Phil Williams Associates and Tetra Tech, Inc. June 2003. Hydrologic modeling for the Watersheds 2000 project. Unpublished report for Clean Water Services. 19pp, 11 figures, and 7 apps.

Riley Research Associates. Summer 2002. Do Clean Rivers Begin at Home? Exploring the Obstacles and Motivations of Homeowner Behavior: A Survey of Public Habits in Oregon's Tualatin River Watershed. Unpublished report for Clean Water Services. 69 pp and app.

Rosgen, Dave. 1996. Applied River Morphology. Second Edition. Wildland Hydrology, Pagosa Springs, CO.

Schuler, Thomas R. and Heather Holland. 2000. The Practice of Watershed Protection. 741pp.

Schuler, Thomas R. and Heather Holland. 2000a. *The Importance of Imperviousness*. Practice of Watershed Protection, p 7-18.

Originally published in Watershed Protection Techniques, 1(3) 100-111.

Scientific Resources, Inc and Walker Macy, Inc. 1990. Tualatin River Ecological Assessment: Appendix E3 Volume III, Wastewater Facilities Plan. Prepared for Unified Sewerage Agency.

Soil Conservation Service – US Department of Agriculture. 1982. Soil Survey of Washington County.

Sutherland, Roger. 1995. Methodology for Estimating the Effective Impervious Area of Urban Watersheds. Technical note #58 Watershed Protection Techniques, 2(1): 282-284

Tualatin River Watershed Council. February 1999. Tualatin River Watershed Action Plan. 47 pp and 5 apps.

Tualatin Water Supply Partners. 2003. Tualatin Basin Water Supply Feasibility Final Report. 76pp.

Unified Sewerage Agency (USA). 2000. Surface Water Management Framework: Report and Appendices.

US Army Corps of Engineers. 1969. Floodplain Information: Tualatin River and Tributaries, Washington County OR. Portland US Army Corps of Engineers.

US Census Bureau, Census 2000. Profile of General Demographic Characteristics: 2000. Web data.

US Geological Survey. 1997. Summary of Information on Aquatic Biota and Their Habitat in the Willamette Basin, through 1995. Surface Water Investigations Report 97-4023. 85pp and 7 apps

US Geological Survey. 1997. Selected Elements and Organic Chemicals in Bed Sediument and Fish Tissue of the Tualatin River Basin, Oregon 1992-1996. Water Resources Investigations report 99-4107. 59pp.

Washington County Emergency Management. 2003. Natural Hazards Mitigation Action Plan.

Westside Consortium for Economic Health. November 2003. Leading the Way, the Westside Story Key to Regional Success. 31pp.

Woodward Clyde. June 1997. Analysis of Oregon Urban Runoff Water Quality Monitoring Data Collected from 1990 to 1996. Final Report prepared for Association of Clean Water Agencies. 61 pp.

World Commission on Environment and Development. 1987. Our Common Future. Oxford University Press, Oxford, England

Incomplete:

ECONorthwest, 2002 – report of findings for economic literature search

Appendices

Appendices are provide on CD's and include the following:

Clean Water Services

2550 SW Hillsboro Hwy
Hillsboro, OR 97123
503.681.3600
www.cleanwaterservices.org

DESIGN AND CONSTRUCTION STANDARDS

for Sanitary Sewer and Surface Water Management

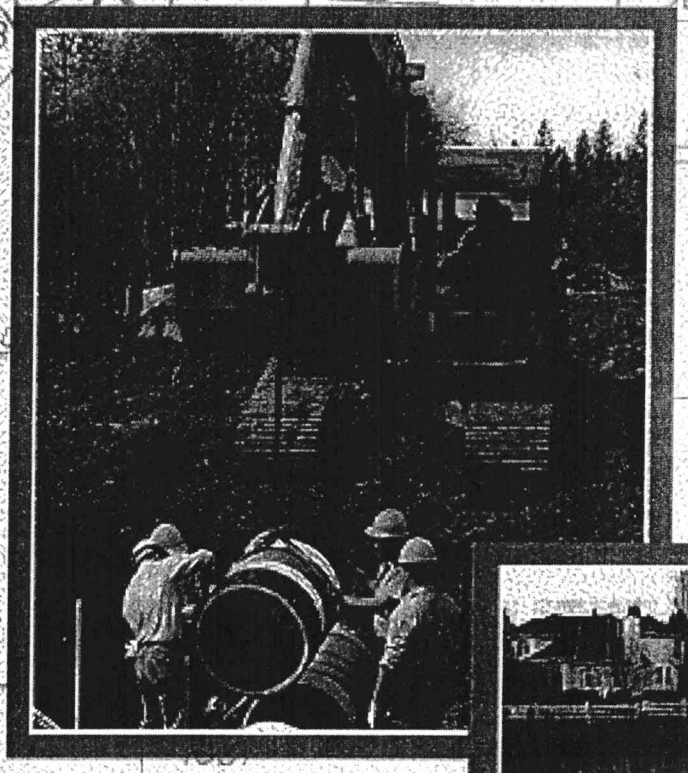

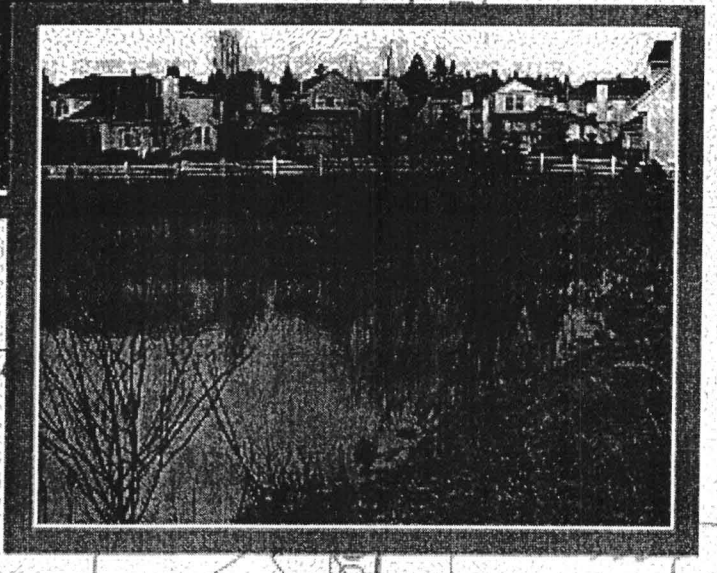

MARCH 2004

Clean Water Services

Our commitment is clear.

TABLE OF CONTENTS

Chapter 1	GENERAL CONSTRUCTION REQUIREMENTS AND ADMINISTRATIVE PROVISIONS
Chapter 2	CWS ADMINISTRATIVE PROVISIONS
Chapter 3	STANDARD DESIGN SPECIFICATIONS FOR STORM AND SURFACE WATER AND VEGETATED CORRIDORS
Chapter 4	STANDARD DESIGN SPECIFICATIONS FOR SANITARY SEWER
Chapter 5	GENERAL CONSTRUCTION SPECIFICATION FOR SANITARY SEWER AND STORM SYSTEMS
Chapter 6	TECHNICAL SPECIFICATION FOR SANITARY SEWER SYSTEMS
Chapter 7	TECHNICAL SPECIFICATION FOR STORM SEWER SYSTEMS
Chapter 8	ENVIRONMENTAL PROTECTION AND EROSION CONTROL RULES
Chapter 9	STANDARD SPECIFICATIONS FOR BUILDING AND SIDE SEWERS
Chapter 10	TECHNICAL SPECIFICATIONS FOR WASTEWATER PUMP STATIONS AND FORCE MAINS
Chapter 11	SEPTIC TANK EFFLUENT PUMP (STEP) SYSTEMS
Chapter 12	PROHIBITED ACTIVITIES
Appendix A	HYDROLOGY AND HYDRAULICS
Appendix B	WATER QUALITY AND QUANTITY FACILITY DESIGN
Appendix C	NATURAL RESOURCE ASSESSMENT
Appendix D	LANDSCAPE REQUIREMENTS
Appendix E	STANDARD DETAILS

Chapter 1

GENERAL CONSTRUCTION REQUIREMENTS AND ADMINISTRATIVE PROVISIONS

Section 1.01 Application of These Regulations

1.02 Definitions

1.03 Responsibilities of Property Owner

1.04 Plan Submittal Requirements Within Cities Operating the Local Program

1.05 Easements

1.06 Inspection Within Cities Operating the Local Program

1.07 Right of Entry to Work

1.08 Indemnification

1.09 Guarantee

1.10 Traffic Maintenance and Safety

1.11 Protection of Property

1.12 Safety Requirements

1.13 Compliance with Applicable Laws

1.14 Interference with District Sewer or Storm System Prohibited

1.15 Inspection Warrants

1.16 Professional Engineering Submittals

1.17 Approval of Alternative Methods, Materials, or Designs

Chapter 1

GENERAL CONSTRUCTION REQUIREMENTS AND ADMINISTRATIVE PROVISIONS

1.01 Application of These Regulations

1.01.1 Except as provided otherwise in a specific section of these rules, these standards and regulations shall apply to all territory within the District. A city within the District may adopt more restrictive standards within the scope of this Resolution and Order, but may not adopt less restrictive standards.

1.01.2 Application of Chapter

The requirements and administrative provisions of this Chapter shall apply to the construction of all components of the District and City sanitary sewer and storm and surface water systems. Additionally, all requirements and provisions of this Chapter except Sections 1.04, Plan Submittal and 1.05, Easements shall apply to the construction of any building sewer or side sewer within the District and City boundaries.

1.02 Definitions

As used in this Resolution and Order, the words or abbreviations set forth below shall have the indicated meanings unless the context requires otherwise. The definitions set forth in Ordinance 27, as amended, shall also apply.

1.02.1 AASHTO

American Association of State Highway and Transportation Officials.

1.02.2 ANSI

American National Standard Institute.

1.02.3 Approved by District or City

See Chapter 2. 01.1.

1.02.4 ASTM

American Society of Testing and Materials.

1.02.5 AWWA

American Water Works Association.

1.02.6 Break in Slope

The transition point where a valley or river bank slope flattens and represents an historic geologic terrace of a stream or river. The point at which the grade extending from a break in slope, away from the stream or river, is less than 25%. Break in slope is also commonly referred to as top of ravine in steeply sloped headwater environments. Break in slope does not include minor surface anomalies that result from localized landslide slumps or site grading.

1.02.7 Building Sewer

That portion of the private sanitary sewer extending from a point five feet outside the established line of the building or structure (including any structural projection except eaves) to the public right-of-way or easement line.

1.02.8 Capital Improvement Plan

The Capital Improvement Plan adopted by the Clean Water Services Board of Directors, and any updates of the plan.

1.02.9 Construction Permit Agreement

An agreement signed by the owner containing all assurances deemed necessary by the District that all public improvements will be constructed in accordance to these standards and the approved project plans.

1.02.10 Contractor

The person designated by the District, City, or owner to do the work in question.

1.02.11 Conveyance System

The surface water conveyance system includes all portions of the surface water system, either natural or man-made, that transport storm and surface water runoff. The purpose of the conveyance system is to drain surface water from properties so as to provide protection to property and the environment. The sanitary sewer conveyance system includes all interceptor and main sewer pipe lines, force mains, pumping or lift facilities, manholes, and related facilities.

1.02.12 Culvert

A surface water drainage pipe crossing a road, driveway, or pathway which has no attached structures.

1.02.13 Designee

The entity designated by the District to conduct alternatives analysis activities, per District/City Inter-Governmental Agreement (IGA) and/or co-permitee status on the National Pollution Discharge Elimination System (NPDES) Municipal Separate Storm Sewer System (MS4) Permit issued by the Department of Environmental Quality.

1.02.14 Development

a. All human-induced changes to improved or unimproved real property, including:

1) Construction of structures requiring a building permit if such structures increase the impervious surface footprint on the real property;
2) Land division, including subdivisions, lot line adjustments, expedited land partitions and minor land partitions. "Land Division" does not include plats for the sole purpose of converting existing buildings to condominiums;
3) Drilling;
4) Site alterations resulting from surface mining or dredging;
5) Grading that would require an erosion control permit;
6) Construction of earthen berms;
7) Paving and roadway construction;
8) Excavating that would require an erosion control permit;
9) Clearing when it results in the removal of trees or native vegetation that would require a permit from the City/County or notification to the Oregon Department of Forestry;
10) Redevelopment; and
11) Construction of utility infrastructure.

b. The following activities are not included in the definition of development:

1) Farming activities when conducted in accordance with accepted farming practices as defined in ORS 30.930 or under the Tualatin River Subbasin Agricultural Water Quality Management Area Plan;
2) Construction on lots in subdivisions meeting the criteria of ORS 92.040(2);

3) Any development activity for which land use approvals have been issued pursuant to a land use application submitted to a land use authority on or before February 4, 2000 and deemed complete by the land use authority on or before March 15, 2000. Renewals or modifications of such land use approvals shall be required to conform to these regulations.

4) Measures to repair, maintain, or remove **existing** structures, facilities, roadways, driveways, accessory uses, or other development, provided such measures are consistent with District/City/County regulations, and do not encroach further into the Vegetated Corridor or Sensitive Area.

5) Interior modifications and vertical additions (additional stories) that do not modify the existing structure footprint or increase the building footprint impervious area of the site, provided such modifications or additions are consistent with District/City/County regulations and do not encroach further into the Vegetated Corridor or Sensitive Area.

6) Measures to replace within the existing footprint a structure(s) lost due to a catastrophic event such as fire, provided that such measures are consistent with District/ City/County regulations. Structures that are partly or wholly within a FEMA designated 100-year floodplain that are damaged beyond more than 50% of the value or proposed to be improved by more than 50% of their value, must be elevated or flood-proofed consistent with the National Flood Insurance Program participation requirements.

1.02.15 District or CWS

"District" or "CWS" means Clean Water Services and includes any representative or employee of the District authorized to act in its behalf.

1.02.16 District or City

When the term "District or City" is used in this Resolution and Order, either the District or a City, including its authorized representatives, may perform a task or duty specified within this Resolution and Order, provided that, a City may perform such task or duty only when:

a. There is an intergovernmental agreement in effect between the District and City assigning such authority to the City, and

b. The City action is within the boundary of that City, and

c. Said action is subject to the terms of such agreement and to the provisions of this Resolution and Order.

Where the term "District or City" is used, the District shall retain the ability to carry out a task or duty.

1.02.17 Drainage Ditch

a. Drainage ditches include:
   1) Roadside ditches that carry only storm water runoff from the adjacent road which may be mixed with unconcentrated flow from adjacent lots
   2) Constructed channels designed as part of the storm water infrastructure and drain directly from storm water facilities or storm pipe systems
   3) Agricultural or other manmade ditches that divert water away from the natural stream for the purpose of irrigation or livestock watering

b. Drainage ditches do not include historically altered streams or channels that convey surface water flows

1.02.18 Easement or Right-of-Way

A right of use on real property of another, entitling the District and City to construct, own and maintain a public sanitary sewer, pump station, storm system, and related facilities on, under and through the subject real property.

1.02.19 Edge of Sensitive Area

1. The top of the channel bank;
2. The two-yr 24 hour design storm elevation for the Tualatin River;
3. The delineated boundary of the wetland, per DSL / Corps procedures for wetland delineation;
4. The outside edge of spring emergence (measured as the area of saturation, hydric soil conditions, or channel formation, whichever is greatest);
5. The average high water mark for lakes, ponds, and in-stream impoundments;
6. For streams draining 10 to 50 acres where no defined channel exists, and where there are no other sensitive areas such as wetlands, the edge of the sensitive area shall be the centerline of the natural drainage swale.

1.02.20 Engineer

The person, firm, corporation, partnership, or association duly registered by the State of Oregon, which is providing engineering work on a project or construction covered by this Resolution and Order. If the person providing the engineering for the project is a District or City employee, then "engineer" expressly includes such employee.

1.02.21 Enhancement

Modification of a Sensitive Area or Vegetated Corridor to improve the resources ecological functions and values and improve its ability to protect the water resources.

1.02.22 Erosion

The movement of soil particles resulting from the flow or pressure from water, or wind, or from tracking by vehicles or foot traffic.

1.02.23 Floodplain

The land area identified and designated by the United States Army Corps of Engineers, the Oregon Division of State Lands, FEMA, or Washington County that has been or may be covered temporarily by water as a result of a storm event of identified frequency.

1.02.24 Floodway

The portion of a watercourse required for the passage or conveyance of a given storm event as identified and designated by the District pursuant to this Resolution and Order. The floodway shall include the channel of the watercourse and the adjacent floodplain that must be reserved in an unobstructed condition in order to discharge the base flood without increasing flood levels by more than one foot.

1.02.25 Floodway Fringe

The area of the flood plain, lying outside the floodway, which does not contribute appreciably to the passage of flood water, but serves as a retention area.

1.02.26 Frontage Length

A linear measure of the length of the development front, which is directly adjacent to the vegetated corridor.

1.02.27 General Processing Fee

A fee established in the District's Rates and Charges Resolution and Order.

1.02.28 Governmental Unit

Governmental unit includes:

a. The federal government and any of its departments, agencies, boards or commissions;

b. The government of the State of Oregon and any of its departments, agencies, boards or commissions;

c. Any city within the District's service district boundaries;

d. The cities of Portland and Lake Oswego;

e. Washington County;

f. Any school district;

g. Any municipal or public corporation or special district, as defined by ORS Chapter 198, which is created for the administration of public affairs, supported by public funds and governed by managers which derive their authority from a federal, state, or local governing body;

h. Any intergovernmental agency, department, council, or like entity created under ORS Chapter 190.

1.02.29 Hazardous Material(s)

"Hazardous material(s)" or "hazardous substance(s)" means any element or compound that, when it enters in or upon the water, presents an imminent and substantial danger to the public health or welfare or the environment, including but not limited to fish, animals, vegetation or any part of the natural habitat in which they are found. "Hazardous material or substance" includes but is not limited to a substance designated under 33 U.S.C. §1321 (b)(2)(A), any element, compound, mixture, solution or substance designated under 42 U.S.C. §9602, any hazardous waste having characteristics identified under or listed under 42 U.S.C. §6921, any toxic pollutant listed under 33 U.S.C. §1317 (a), any imminently hazardous chemical substance or mixture with respect to which the Administrator of the United States Environmental Protection Agency has taken action under 15 U.S.C. §2606, and any residue classified as a hazardous waste pursuant to ORS 466.020(3).

1.02.30 ICEA

Insulated Cable Engineers' Association.

1.02.31 Impervious Area

Pavement, maintained gravel areas, structures, public and private roadways, roofs, and other hard surfaces which are not specifically designed to allow water to infiltrate. Effective impervious area is not directly connected to the drainage system via piping.

1.02.32 Inspector/District Inspector

The person designated by the District or City to inspect the work.

1.02.33 Intermittent Flow

The flow in streams and springs that consistently do not have year-round water or saturated soil within their channel or swale in a year with wet to average precipitation patterns. Intermittent flow must occur with some degree of regularity and must be in a definite direction. Refer to Appendix C Table 1: Precipitation to determine wet, dry or average year precipitation levels. To be considered intermittent, the channel must meet one of the following criteria in a year with wet to average precipitation levels:

a) The channel must be dry without visible flow or standing water for a minimum of 30 consecutive days; or
b) The channel must not have saturated soil in the upper 12 inches.

1.02.34 Local Program

The portion of the sanitary sewerage system, or storm and surface water system, program of construction, operation, maintenance, and regulation within the District's service area which may be performed by the District, or by a City, County, or by intergovernmental agreement.

1.02.35 Mitigation

The reduction of adverse effects of a proposed project by considering, in the following order:

a. Avoiding the impact altogether by not taking a certain action or parts of an action;

b. Minimizing impacts by limiting the degree or magnitude of the action and its implementation;

c. Rectifying the impact by repairing, rehabilitating or restoring the affected environment;

d. Reducing or eliminating the impact over time by preservation and maintenance operations during the life of the action by monitoring and taking appropriate corrective measures; and

e. Compensating for the impact by replacing or providing comparable sensitive areas or vegetated corridors.

1.02.36 NEMA

National Electrical Manufacturers' Association.

1.02.37 "Or Equal," "Or Approved Equal," "Or Equivalent"

These terms indicate that the "equal" product is the same or better than the product or standard named or prescribed in function, performance, reliability, quality, and general configuration.

Determination of the quality in reference to the project design requirements will be made by the District. Contractor shall not use such "equal" products without prior written approval of the District.

1.02.38 ORS

Oregon Revised Statutes

1.02.39 Outfall

A point where collected and concentrated surface and storm water runoff is discharged.

1.02.40 Owner or Property Owner

The person who is the legal record owner of the real property, or where there is a recorded land sale contract, the purchaser thereunder.

1.02.41 Perennial flow

The flow in streams and springs that have year-round water or saturated soil within the channel in a year with wet to average precipitation patterns. A stream will be considered perennial unless determined to be intermittent using one of the criteria outlined in 1.02.33.

1.02.42 Person

Any individual, firm, partnership, joint venture, association, social, fraternal, educational, religious or charitable organization, fraternity, sorority, joint stock company, corporation, estate, trust, business trust, receiver, trustee, syndicate, municipal corporation, district or political subdivision or any legal entity whatsoever.

1.02.43 Plans

The drawings and designs that specify construction details as prepared by the Engineer.

1.02.44 Post-Construction Erosion Control

Re-establishing groundcover or landscaping prior to the removal of temporary erosion control measures.

1.02.45 The Property or The Site

The subject real property on which development or permitted activity takes or is proposed to take place. For activity occurring on property other than that which the applicant owns or controls, the property or the site shall mean the land within limits of the permanent and temporary construction easements.

1.02.46 Public/District's Sanitary Sewer(s) and Storm and Surface Water System

The sanitary sewer and storm and surface water collection systems, within easements dedicated to the public or District/City, which are operated and under the jurisdiction of and maintained by the District and/or City.

1.02.47 Redevelopment

Redevelopment is any activity that alters existing improved impervious area on the subject property. Redevelopment includes, but is not limited to: the expansion of or change to an existing building footprint or structure; reconfiguration of existing roadways, driveways, or parking lots; and land disturbing activities related to structural or impervious area modifications.

1.02.48 Replacement Area

The mitigation area required to compensate for an encroachment into the Vegetated Corridor or Sensitive Area.

1.02.49 Roadways

Roadways include the driving surface, the structural embankment of the road surface, and associated drainage ditches. Roadways may or may not correspond to the road right-of-way.

1.02.50 Sensitive Area

a. Includes:

1) Existing and created wetlands;

2) Rivers, streams, and springs, whether flow is perennial or intermittent;

3) Natural lakes, ponds, and instream impoundments;

b. Does not include:

1) Storm water infrastructure;

2) A Vegetated Corridor (a buffer) adjacent to the Sensitive Area;

3) An off-stream recreational lake, wastewater treatment lagoon, fire pond or reservoir; or

4) Drainage Ditches.

1.02.51 Side Sewer and Side Storm

That portion of the private sanitary sewer or storm system extending from the public sanitary sewer or storm system main to the public right-of-way or easement line.

1.02.52 Spring

The point at which groundwater emerges and forms a channel or swale.

1.02.53 Stream

A surface concentration of flow in a channel or swale draining greater than 10 acres in which a flow of water occurs either perennially or intermittently.

1.02.54 Storm Water

Storm water is water that runs off only from impervious surfaces during rain events.

1.02.55 Storm Water Infrastructure

Any structure, feature, or drainage ditch that is designed, constructed, and maintained to collect and filter, convey, retain, or detain storm water run-off during and after a storm event for the purpose of water quality improvement or quantity management. It includes, but is not limited to, features such as constructed wetlands, water quality swales, landscaped retention areas, and detention ponds that are maintained as storm water quality or quantity control facilities.

1.02.56 Surface Water

Water that drains from the landscape via overland flow or ground water resurgence. Surface water flows can and often do include storm water runoff.

1.02.57 This Resolution and Order

"This Resolution and Order," "These Standards and Regulations" and similar terms mean this entire Resolution and Order adopted by the CWS Board of Directors, this Exhibit A, Chapters 1-12 and Appendices A-D.

1.02.58 UL

Underwriters' Laboratories, Inc.

1.02.59 User

The person responsible for discharge of storm water or wastewater into the District system, as further defined in Ordinance 27.

1.02.60 Vegetated Corridor

A corridor adjacent to a Sensitive Area that is preserved and maintained to protect the water quality functions of the water quality Sensitive Area.

1.02.61 Visible or Measurable Erosion

Visible or measurable erosion includes, but is not limited to:

a. Deposits of mud, dirt, sediment or similar material exceeding one-half cubic foot in volume on public or private streets, adjacent property, or into the storm and surface water system, either by direct deposit, dropping,

discharge, or as a result of the action of erosion.

b. Evidence of concentrated flows of water over bare soils; turbid or sediment laden flows; or evidence of on-site erosion such as rivulets on bare soil slopes, where the flow of water is not filtered or captured on the site using the techniques in Chapter 8.

c. Earth slides, mudflows, earth sloughing, or other earth movement, which leaves the property.

1.02.62 Water Quality Sensitive Area, or Sensitive Area

See "Sensitive Area" definition

1.02.63 Watercourse

A watercourse is a
a. channel
b. creek
c. stream
d. river
e. swale, or
f. storm drain pipe in which a flow of water occurs either perennially or intermittently.

1.02.64 Wetlands

Those areas that are inundated or saturated by surface or ground water at a frequency and duration sufficient to support, and that under normal circumstances do support, a prevalence of vegetation typically adapted for life in saturated soil conditions. Categories of wetlands include:

a. Created Wetlands
Those wetlands developed in an area previously identified as a non-wetland to replace, or mitigate wetland destruction or displacement. A created wetland shall be regulated and managed the same as an existing wetland.

b. Constructed Wetlands
Those wetlands developed as a storm water facility, subject to change and maintenance as such. These areas must be clearly defined or separated from existing or created wetlands. Constructed wetlands shall be regulated as created wetlands only if they serve as wetland mitigation.

c. Existing Jurisdictional Wetlands
Jurisdictional wetlands as determined by the Division of State Lands (DSL) or the US Army Corps of Engineers (COE).

1.02.65 Work

All labor necessary to produce the construction required by the approved construction plans, and all materials and equipment incorporated to complete construction.

1.03 Responsibilities of Property Owner

In addition to all requirements placed upon the Owner herein, whenever any requirement or obligation is imposed upon the Engineer, the Contractor or any other individual employed or supplied by the Owner in this Resolution and Order, such requirement or obligation is also expressly imposed upon the Owner of the property. The Owner's indemnification, contained in Section 1.08 below, expressly includes indemnification for any failure on the part of the Engineer, the contractor or any other employee to comply with this Resolution and Order.

All costs associated with the sanitary sewer or storm system construction, vegetated corridors, and erosion control pursuant to a Construction Permit Agreement including, but not limited to, repairs of defective work, shall be borne by the property owner.

1.04 Plan Submittal Requirements Within Cities Operating the Local Program

Construction plans for any proposed public sanitary or storm system or water quality or quantity facility to be located within a city operating a local program shall be prepared by an Engineer registered in Oregon and submitted to the appropriate city for review. The City shall submit one set of construction plans to CWS for review and approval. If the proposed public sanitary/storm system connects to a CWS system, the City shall submit two sets of plans to the District. CWS shall review the plans to assure conformance to these construction standards and return one set to the City. The City shall incorporate CWS's comments into the final approval of the construction plans.

1.05 Easements

The District and City shall determine what facilities shall be part of the publicly owned sanitary and surface water management system. Such facilities shall require an easement or dedication. Facilities shall include sanitary sewers, pump stations, storm sewer systems, sensitive areas and associated vegetated corridors, created and constructed wetlands, and water quality or quantity facilities. Access easements are required to all public water quality and quantity facilities that include outlet control structures and to manholes where required by the District or City. The Owner shall provide the District or City with the documents necessary to grant such easements.

1.06 Inspection Within Cities Operating the Local Program

The inspection of sanitary and storm sewer systems and water quality and quantity facilities within a City which operates a local program is the responsibility of that City. The City shall assure compliance with these construction standards. The District may inspect such facilities at its discretion in addition to the City inspection.

1.07 Right of Entry to Work

Representatives of the District and any federal, state, or local agencies having jurisdiction over any sanitary or storm and surface water work site, shall have right of entry to any and all portions of the work at reasonable times, and the Contractor shall cooperate in all respects with such agencies and shall provide proper facilities for access and inspection.

1.08 Indemnification

The Owner and other parties to a construction permit agreement shall indemnify and hold harmless the District and/or City, its officers and employees from and against all claims, demands, penalties, damages, losses, expenses, including attorneys' fees, and causes of action of any kind or character, including the cost of defense thereof, arising or alleged to have arisen in favor of any person on account of personal injury, death or damage to property arising out of or resulting from or alleged to have arisen out of or resulted from, in whole or in part, any act or omission of the Owner, its Engineer, its Contractor, its Safety Manager or anyone directly or indirectly employed by any of them or anyone for whose acts any of them may be liable.

1.09 Guarantee

The Owner shall furnish high quality equipment, supplies, and materials, and perform the work in accordance with these specifications. Any failure or omission of any District or City inspector to reject any defective equipment, supplies, materials, or work shall not be construed as an acceptance thereof nor release the Owner from his obligations hereunder. Upon notification of any deficiency by District or City, the Owner shall properly reconstruct or replace any defective equipment, supplies, materials, or work at his own expense at any time upon discovery of the defect during the period of construction and for the full guarantee period following acceptance of the work and indemnify District and City from any claims resulting therefrom. The Owner shall guarantee all materials and equipment furnished and work performed for a minimum period of one year from the date of formal written acceptance by the District or City. The Owner further warrants and guarantees for a minimum period of one year from the date of final acceptance of the system that the completed system is free from all defects due to faulty materials or workmanship and the Owner shall promptly make such corrections as may be necessary by reason of such defects including the repairs of any damage to other parts of the system resulting from such defects.

1.10 Traffic Maintenance and Safety

The Contractor shall comply with all rules and regulations of the City, County, or State authorities regarding the closures of public streets or highways to use of public traffic. No public road shall be closed to the public except by express permission of the public agency responsible for the road. The Contractor shall conduct his operations so as to assure the least possible obstruction to traffic and normal commercial pursuits. The Contractor may be required to submit a traffic control plan to the appropriate jurisdiction for review and approval prior to beginning construction.

1.11 Protection of Property

The Contractor shall protect stored materials, cultivated trees and crops, and other items located adjacent to the proposed construction limits. Property owners affected by the construction shall be notified at least 48 hours in advance of the time construction begins. During construction, no person shall be without vehicular access to their residence or place of business for a period exceeding eight hours, unless the Contractor has made special arrangements in writing with the affected person.

1.12 Safety Requirements

The Owner and Contractor are responsible for the safety of the work and of all persons and property coming into contact with the work. The Contractor shall conduct the work in such a manner as to comply with all requirements of Occupational Safety and Health Administration, the Oregon Safe Employment Act and any other agency having authority over such matters. The Contractor shall minimize the possibility of accident or injury to workers and the general public. The Contractor shall conduct the work to provide all reasonable safeguards so as to protect public and private property. If the District or City inspector observes a violation of safety practices, the District or City inspector will inform the Contractor of the inspector's observation. The Contractor shall then immediately correct the violation. If the Contractor does not do so, the District or City shall notify the appropriate agency having jurisdiction. If, in the opinion of the District or City inspector, the safety violation is of a nature to present imminent danger to Contractor's workers or the general public, the District or City inspector may cause the construction work to stop until the safety violation is corrected. The District and City inspector's role is not one of supervision or safety management, but is one of overview only. Nothing contained in this section or elsewhere in this Resolution and Order shall be interpreted to obligate the District or City to act in any situation nor to shift the Owner's responsibility for safety compliance to the District or City. No responsibility for the safety or the work or for construction means, methods, techniques, sequences or procedures shall attach to the District or City by virtue of its action or inaction under this section.

1.13 Compliance with Applicable Laws

The Contractor shall keep fully informed of all local ordinances, as well as state and federal laws, which in any manner affect the work herein specified. The Contractor shall at all times comply with said ordinances, laws, and regulations, and protect and indemnify the District and/or City and its officers and agents against any claim or liability arising from or based on the violation of any such laws, ordinances, or regulations. All permits, licenses, and inspection fees necessary for execution and completion of the work shall be secured by the Owner or Contractor, except where specifically provided by the District or City.

1.14 Interference with District or City Sanitary Sewer or Storm System Prohibited

No person shall block, obstruct or interfere with any portion of the District or City sanitary sewer or storm system without approval of the District or City. This prohibition includes, but is not limited to, the obstruction of the flows from and to any point within the District sanitary sewer or storm system.

1.15 Inspection Warrants

The District or a City may apply to a court of competent jurisdiction for an inspection warrant pursuant to this section. The District or City may apply for such warrants whenever the District or City has requested of the property owner or his/her apparent agent access to any premises to ascertain information necessary to carry out the provisions of this Resolution and Order and such request has been denied. Information necessary to carry out these provisions shall include, but not be limited to, verification of owner-supplied data. An inspection warrant issued pursuant to this section is an order authorizing an inspection or investigation to be conducted at a designated place or property for the purpose of obtaining the above-described information.

1.16 Professional Engineering Submittals

The District requires strict compliance with Oregon Revised Statute 672 for Professional Engineers.

When required by this Resolution and Order all engineering plans, reports, calculations, and other technical submittals shall be prepared, sealed, and signed by a Professional Engineer currently registered in the State of Oregon. It is the Engineer's responsibility to become familiar with, and comply with all design and construction Standards as contained within this Resolution and Order and to review any proposed changes with the District prior to design, permit approval, or construction. District approval of engineered plans and other submittals does not in any way relieve the Engineer of responsibility to meet all requirements of the District or obligation to protect the life, health, safety, and property of the public. Except where alternative methods, materials or designs have been approved by the District under section 1.17, the Engineer shall be required to revise or supplement the design if the District determines that the full requirements of these

Standards have not been met.

1.17 Approval of Alternative Methods, Materials, or Designs

Alternate methods or materials not explicitly approved in these Standards will be considered for approval on the basis of the intent, objectives, and applications set forth in this Resolution and Order and other District rules and regulations. Any alternative must meet or exceed the minimum requirements set forth in these Standards. Those seeking such approvals shall make application in writing. Approval of any major or significant deviation or waiver from these Standards, as determined by the District, will be in written form.

The written application is to include the manufacturer's specifications, testing results, design drawings, calculations, maintenance and operation requirements, and other pertinent information. Request for approval of alternatives or waiver of a standard may be submitted with initial or subsequent plan submittals and shall include a written report with all pertinent information necessary to review, evaluate and approval the request. All requests will be reviewed and evaluated on a case-by-case basis.

Chapter 2

CWS ADMINISTRATIVE PROVISIONS

Section 2.01 Application of Chapter

2.02 Pre-Development Site Certification and Assessment

2.03 Site Development Permit

2.04 Requirements for Plan Approval

2.05 Easements

2.06 Performance Assurances

2.07 Construction Permit Agreement

2.08 Project Completion and Acceptance

2.09 As-Built Drawings

2.10 Maintenance Assurance

2.11 Maintenance Period Inspection and Completion

2.12 General Administrative Rules

2.13 Technical Guidance Documents

Chapter 2

CWS ADMINISTRATIVE PROVISIONS

2.01 Application of Chapter

The requirements and administrative provisions of this Chapter apply to the construction of any and all components of the CWS sanitary sewer and storm systems, and to all activities with the potential to cause erosion, within the unincorporated area of the CWS service district, and within the following Cities: Banks, Durham, Gaston, King City, and North Plains, and within any other City which formally adopts these requirements.

2.01.1 Interpretations of Provisions

The phrase "Approved by District or City" is intended to allow the District or City to interpret the provisions in question in a manner that will protect the public health and safety, be consistent with other applicable laws and other standards of the District, and will preserve the safe and reliable operation of the public sanitary sewer and storm and surface water systems. The phrase "as approved by District or City" shall allow a City to make the interpretation, subject to the limitations of Section 1.02.3. Where the context provides for approval by the District or City of an alternative or a waiver to the standards provided in this Resolution and Order, the term shall mean approval of an alternative method, material, or design which, based on an engineering judgment, meets the purpose of the standard, for the specific application and as provided in Section 1.17.

2.02 Pre-Development Site Certification and Assessment

Prior to undertaking any development or completing a land use application to the land use authority for development, as defined in Chapter 1, the Owner or the Owner's authorized agent shall submit a site certification, and if required, a natural resource assessment, for the Water Quality Sensitive Areas and Vegetated Corridors on or adjacent to the development site, to the District for review and concurrence in accordance with the requirements of Chapter 3, or receive a determination from the District that a Site Certification is not necessary.

2.02.1 Expiration of Site Certification

District Site Certification is valid for two years from the date of approval, or until the project's current land use approval expires, unless substantial construction has started and is continuing. After two years, if land use application has not been completed, or a Site Development Permit has not been issued and if substantial construction is not continuing, the plans must be resubmitted to the District for review and approval, and the District shall require an updated natural resource assessment to document current conditions of the Sensitive Area and Vegetated

corridor.

2.03 Permit Process

2.03.1 Criteria for Site Development Permit

No person shall undertake the construction of, or modification to, any facilities governed by these rules without first obtaining a Site Development Permit from the District. The Site Development Permit will not be issued until the owner or his authorized agent has satisfied the following requirements:

a. Submitted easements as required in Section 2.05;

b. Submitted required performance assurances as required in section 2.06;

c. Executed a Construction Permit Agreement which has been accepted by an authorized representative of the District and been approved by District Legal Counsel as required in Section 2.07;

d. Paid all required fees including plan review and inspection fees and systems development charges;

2.03.2 Criteria for Erosion Control Only Permit Submittals

a. Erosion Control Only permits may be issued on all or a portion of the site in advance of the Site Development Permit when application for an Erosion Control Permit is made separately from application for a Site Development Permit and all of the following conditions are met.

1. Three sets of folded plans, on 24" x 36" sheets, shall be submitted to the District or City for review. This plan set shall only include the title sheet, grading and Erosion Prevention and Sediment Control Plan, and related sheets. The plan shall be clearly marked for Erosion Control Only.

2. The grading and Erosion Prevention and Sediment Control Plan must show the methods and interim facilities to be constructed or used concurrently and to be operated during construction to control erosion. The grading and Erosion Prevention and Sediment Control Plan shall meet the requirements of Section 2.04.2.k. and shall be prepared using the techniques and methods contained and prescribed in the latest edition of the Erosion Prevention and Sediment Control Planning and Design Manual, together with the provisions of Chapter 8.

3. A preliminary site development plan shall have been submitted separately and have undergone initial review by the District or City for compliance with this Resolution and Order. The site development plan shall be of sufficient detail to determine that no major revisions are

required that may substantially affect grading, pipe alignments, water quality or quantity facilities, sensitive areas or vegetated corridor requirements.

4. All other agency (i.e., COE, DSL) permits must have been issued for the portion of the site or development for which the Erosion Control Only permit is being requested and a copy of these permits shall be provided to the District.

b. The District or City shall collect a fee to defray the costs to review plans, to administer, and enforce an erosion control program, inclusive of inspection services, in order to carry out the rules contained herein.

c. Erosion Control Permits

1. Except as noted in Section 2.03.2.c.3, no person shall cause any change to improved or unimproved real property that causes, will cause, or is likely to cause a temporary or permanent increase in the rate of soil erosion from the site without first obtaining a permit from the District or City and paying prescribed fees. Such changes to land shall include, but are not limited to, grading, excavating, filling, working of land, or stripping of soil or vegetation from land.

2. No jurisdiction shall issue a permit for construction, land development, grading, excavating, filling, or clearing of land without first verifying in writing that the District or City has issued an Erosion Control Permit covering such work, or the District or City has determined that no permit is required. No public agency or body shall undertake any public works project without first obtaining an Erosion Control Permit covering such work, or receiving a determination from the District or City that no permit is required.

3. No Erosion Control Permit (from the District or City) is required for the following:

a) For work of a minor nature provided all the following criteria are met:

(1) The land development does not require a development permit or approval from the local jurisdiction having land use decision authority, and

(2) No land development activity or disturbance of land surface occurs within 100 feet of a Sensitive Area,

and

(3) The slope of the site is less than 20 percent, and

(4) The work on the site involves the disturbance of less than 500 square feet of land surface, and

(5) The excavation, fill, or combination thereof involves less than 20 cubic yards of material.

b) Permits and approvals for land division, interior improvements to an existing structure, and other approvals for which there is no physical disturbance to the surface of the land.

c) Activities within the boundary of CWS that constitute accepted farming practices as defined in ORS 30.930 and 215.203.

d) Exception from the permit requirement does not exempt the property owner from the responsibilities of Section 8.03.2.

2.03.3 NPDES 1200-C Permit

Through an agreement with the Department of Environmental Quality (DEQ), the District acts as DEQ's agent in receiving registration applications for the General Permit 1200-C for the control of storm water associated with construction activities where required by DEQ. Persons who develop within the District boundary and who would be required to obtain a DEQ 1200-C permit shall submit the required 1200-C forms and fees, as applicable, to the District or City prior to obtaining the site development permit. The District shall review and forward the permit application to DEQ, who will formally issue the permit.

2.04 Requirements for Plan Approval

2.04.1 Initial Plan Submittal

The owner or the owner's authorized agent shall submit to the District for review and approval plans prepared by an Engineer registered in Oregon for the construction or modification of any public sanitary or storm system, stormwater facility, erosion control permit, or other facility covered by these rules.

2.04.2 Initial Plan Submittal Requirements

No submittal shall be considered complete until the following information is received and all the requirements of this section are met as determined by the District.

a. Non-refundable Plan Review Deposit, if applicable

b. Land Use Authority Conditions of Approval.

c. Four sets of folded plans on 24" X 36" sheets, or as otherwise approved by the District. Individual plan sets that exceed 20 pages may be rolled and stapled.

d. The following information shall be included on the first plan sheet:

1. Vicinity map sufficient in scope to locate the proposed development.
2. The proposed name of the development, the name and address of the owner and developer, the name and address of the engineer, and the land use authority case file number, on the lower right-hand quarter of the sheet.
3. A description that includes township, range, quarter section and tax lot numbers of the areas impacted by the development.
4. The total square footage of new and existing impervious area within the project area. This calculation shall be separated into the square footage:
    a. Within Public Right-of-Way;
    b. Within Private Right-of-Way; and
    c. On Private Property.
5. The total square footage of the vegetated corridor, if applicable.
6. Index of plan sheets.
7. For multi-phase projects, an overall map showing the limits of each phase.
8. Corps and/or DSL permit application number (if permit is required), and the project or permit application number(s) for any other federal, state or local entity, or wetland delineation. Copies of the permit applications shall be included with the submittal. A site development permit shall not be issued until CWS has received confirmation of the permit conditions from the permitting authority and reviewed the plans to determine if any changes are necessary as a result of the permit conditions.

e. Clear, readable plan and profile views of all proposed sanitary sewer lines, storm sewer and surface water systems, shall be provided. The plan and profile drawings shall meet the requirements outlined in 2.04.2.e.1-15, or as otherwise approved by the District. If the design Engineer anticipates that any of the requirements will not be met due to the configuration of the proposed development, the design Engineer is advised to meet with District staff to gain approval for the deviation prior to submittal.

1. Sanitary sewer plan and profile information presented on separate sheets from the storm and surface water plan and profile information.
2. Plan and profile views displayed one over the other on the sheet.
3. Public and private lines and facilities clearly marked on both the plan and profile view.
4. Existing sanitary manholes labeled with the designated CWS or City number.
5. The distance from the nearest existing manhole where a new manhole structure is constructed over an existing line, or where a main line connection is made to a trunk line.
6. Existing and proposed utilities shown on the plan view and utility crossings shown on the profile. Utilities other than sanitary and storm sewer shall be "ghosted".
7. A plan view scale no smaller than 1"= 50', and the profile view scale no smaller than 1"= 50' horizontal and 1"=10' vertical. Architectural scales shall not be used.
8. North arrow.
9. Type of backfill labeled on profile using CWS standard nomenclature.
10. All easements including the distance from the mainline to easement line.
11. Location of the low points of street grades and curb returns.
12. Drainage hazard areas and FEMA designated 100 year floodplains and floodways.
13. The stationing of each new main line section beginning at 0+00 or other even station (e.g., 1+00, 10+00, etc.) at the downstream terminus. In phased developments, previous stationing may be continued.
14. The edge of all Water Quality Sensitive Areas, as defined in Chapter 1.

15. The boundaries of the defined Vegetated Corridor.

f. The calculations for sizing of the sanitary and storm system submitted in a separate document.

g. If a water quantity or quality facility is required, a plan addressing the requirements shall be submitted which includes the design of a water quantity and/or quality facility including sizing calculations, access road design, landscaping and maintenance requirements, planting plan, plant list, and planting details. For privately maintained water quantity or quality facilities, a maintenance plan shall be submitted that identifies maintenance activities and frequency.

h. If vegetated corridor restoration is required in accordance with Chapter 3, a plan addressing the requirements shall be submitted which includes the following:

1. A plan view at no smaller than 1"=100' scale, showing the location and dimensions of the Vegetated Corridor.
2. Design information to meet the criteria of Chapter 3.

i. Planting plans, tabular plant counts, and landscaping and maintenance instructions for sensitive areas and buffers shall be illustrated separately from those for water quality facilities.

j. Details for all ditch grading including, restoration, erosion control measures and channel protection.

k. An Erosion Prevention and Sedimentation Control Plan which includes the following items at a minimum:

1. If submitted independently of the full project plans, a cover sheet with the proposed name of the development, the name and address of the owner and developer, the name and address of the engineer, and the land use authority case file number.
2. The total acreage of the site and the total acreage of the proposed disturbed area.
3. Site features as identified below.
    a. Existing topography for the site.
    b. Adjacent off-site drainage patterns indicated by arrows.
    c. Contours at 2-foot intervals. Where slopes exceed 15 percent, contours may be shown at 5-foot intervals.
    d. North arrow.

e. Existing and proposed structures for the project site.

f. Existing and proposed access location for the project site.

g. Existing project boundaries, rights-of-way, easements, and jurisdictional boundaries clearly identified by note or symbol or key.

h. Adjacent streets, including street names, and right-of-way boundaries.

i. Capacity and condition of existing drainage facilities, including roadside or other drainage ditches, that transport surface water onto, across, or from the project site.

j. Existing Sensitive Areas, Vegetated Corridors, and water quality and quantity facilities. For natural drainage features, show direction of flow, Drainage Hazard Areas, and the 100-year floodplain.

k. Clearing and grubbing limits.

l. Proposed ground contours.

m. For multi-phase projects, phasing of any erosion prevention and sedimentation control work clearly indicated on the plan.

n. Details of proposed erosion prevention and sediment control devices. When sedimentation ponds are proposed, at least one cross section detail shall be shown.

l. If alternative methods, materials, or designs other than those included within this Resolution and Order are proposed, a written report shall be submitted which includes design drawings, calculations, maintenance and operation requirements, and other pertinent information necessary to review and evaluate the proposal.

2.04.3 Timing for Plan Review

a. The District shall endeavor perform a completion check of the initial plan submittal for compliance with Section 2.04.2 within three working days following the day of receipt. Submittals which are not in substantial compliance with Section 2.04.2 will be returned without further review.

b. Upon acceptance of a complete plan submittal in compliance with Section 2.04.2, the District shall endeavor to approve, return for revision, or reject the plans within 15 working days following the day of receipt. If plans are rejected, the reasons shall be indicated in writing.

c. The District shall endeavor to approve, return for revision, or reject subsequent submittals within 10 working days.

2.04.4 Revised Plan Submittal and Approval

a. After the initial review pursuant to section 2.04.3 is completed, a set of plans with comments and/or revisions shown in red shall be returned to the Engineer. Two sets of revised construction plans addressing all comments made by the District shall then be submitted for approval. Upon approval of the plans, a minimum of four plan sets shall be provided to the District.

b. Upon approval of the plans, an engineer's cost estimate of construction, erosion control (EC), and landscaping details shall be submitted to the District for the calculation of bonds and fees. The cost estimate shall be itemized as follows:

1. Onsite Storm Sewer Improvements itemized for each pipe size and type
2. Offsite Storm Sewer Improvements itemized for each pipe size and type
3. Onsite Sanitary Sewer Improvements itemized for each pipe size and type
4. Offsite Sanitary Sewer Improvements itemized for each pipe size and type
5. Water Quantity/Quality Facility Construction itemized for the following:
   a) Excavation/Site Preparation
   b) Control Structures, piping and water quality manholes
   c) Fencing and maintenance access road costs
6. Water Quantity/Quality Facility Landscaping. This includes any landscaping in the treatment area or on the side slopes of the Water Quality facility along with any large trees planted solely to provide shade for the facility.
7. Restoration, Mitigation or Sensitive Area Landscaping
8. Erosion Control Installation and Maintenance
   a) Cost to install and maintain Erosion Control measures for the period of construction.
   b) If significant erosion control installation and maintenance costs are anticipated following construction due project size or duration, or if the erosion control plan will be amended due to changing site conditions or differing recovery times between areas, a separate estimate for Post Construction Erosion Control shall be provided.

c. District plan approval is valid for two years from the date of approval, or until the project's current land use approval expires, unless substantial construction has started and is continuing. After two years, if a Site

Development Permit has not been issued and if substantial construction is not continuing, the plans must be resubmitted to the District for review and approval, and the District shall require revisions so that the plans meet the current construction standards.

2.04.5 Notification of Start of Construction

The Owner or his designee shall notify the District at least two working days in advance of starting construction on any project covered by these rules.

2.04.6 Post-Approval Plan Modifications

When modification of the approved plan is requested by the owner, three sets of plans showing the revisions shall be submitted to the District for approval. No construction of the modified section can commence until these revised plans are approved. Plan review fees for modification of the approved plans will be charged at the District's established plan review rates.

2.05 Easements

2.05.1 Timing of Requirement

Off-site easements shall be granted to the District on an instrument approved by District Legal Counsel prior to the issuance of the Site Development Permit. On-site easements shall be granted to the District and shown on the final plat before plat approval and recording.

2.05.2 Dimensions of Easements

Easements for single lines shall be a minimum of fifteen feet wide unless otherwise approved by the District. Easements for multiple lines shall be a minimum of twenty feet wide. When a pipe will be "deadheaded", the easement shall extend a minimum of five feet past the end of the structure. Access easements suitable to provide access for the maintenance vehicles and equipment used by the District or City are required for all public water quality and quantity facilities that include outlet control structures. Access easements shall be provided to manholes, where required by the District or City.

2.06 Performance Assurances

2.06.1 Performance Assurance Requirement

a. Performance assurances shall be required for work authorized by the District to ensure quality and completeness of the project and shall be submitted by the Owner as a performance assurance for such work. Assurances should be in the form of a letter of commitment, performance

bond or cash deposit in form and substance satisfactory to the District.

b. If the Contractor provides the performance assurance for the project, both the Contractor and Owner are required to execute the Construction Permit Agreement required by Chapter 2.07.

c. The District will require submission of certificates of insurance in form and substance satisfactory to the District by the Owner and/or the Contractor prior to the permitting of any project under these rules.

2.06.2 Performance Assurance Amount and Duration

Except as may be allowed in Chapter 2.06.3, the amount of the performance assurance shall be as identified in Table 2-1. Modifications to plans approved by the District may require an increase in the performance bond amount.

Table 2-1
Performance Assurances

Type of Performance Assurance	Purpose	Amount	Required	Duration and Conditions for Release
1. Performance Assurance (if development is to be platted prior to completion of construction or if no plat is required)	Ensures that all public facilities and all public or private water quality and quantity facilities are built in accordance with terms and conditions of development permit	• 100% of the cost to construct all public sanitary and storm sewer systems; PLUS • 100% of the cost to construct all public or private water quality and water quality facilities, including landscaping; PLUS • 100% of cost to install Erosion Control; PLUS • 100% of the costs related to vegetated corridor	Prior to issuance of a site development permit	• Released upon completion of all terms and conditions of the Site Development Permit, EC Plan, Construction Permit Agreement; and • Completion and acceptance of the public sanitary and storm sewer systems, water quality and water quantity facilities, and vegetated corridor restoration

Type of Performance Assurance	Purpose	Amount	Required	Duration and Conditions for Release
		restoration		• NO Partial Releases
2. Performance Assurance (if development will not be platted prior to completion of construction)	Ensures that all public facilities and all public or private water quality and quantity facilities are built in accordance with terms and conditions of development permit	• 100% of the cost to construct all OFFSITE public sanitary and storm sewer systems; PLUS • 100% of the cost to construct all public or private water quality and water quantity facilities; PLUS • 100% of the cost to install Erosion Control; PLUS • 100% of the costs related to vegetated corridor restoration; PLUS • 10% of the cost to construct all ONSITE public sanitary and storm sewer systems	Prior to issuance of a site development permit	• Released upon completion of all terms and conditions of the Site Development Permit, EC Plan, Construction Permit Agreement; and • Completion and acceptance of the public sanitary and storm sewer systems, water quality and water quantity facilities, and vegetated corridor restoration • NO Partial Releases are allowed
3. As Built	Insures completion of as-built drawings in accordance with Section 2.09	• $2000 or 1% of cost of construction of the sanitary and storm systems and the water quality/quantity facility, whichever is greater	• Prior to issuance of site development permit	Released upon completion and acceptance of as-built drawings in accordance with Section 2.09

Type of Performance Assurance	Purpose	Amount	Required	Duration and Conditions for Release
4. Vegetated Corridor, water quality and water quantity facility landscaping performance assurance	Insures completion of vegetated corridor restoration and water quality and water quantity facility landscaping in accordance with Chapter 3	100% of the costs related to vegetated corridor restoration and water quality and quantity facility landscaping	• Prior to issuance of site development permit	Released upon completion and acceptance of vegetated corridor restoration and water quality and water quantity facility landscaping

2.06.3 Performance Assurance Exemptions

The District may, at its discretion, exempt a project of a governmental unit from the performance assurance requirements of Sections 2.06.2 when the governmental unit provides a letter of intent and commitment, satisfactory to the District, to complete the project in accordance with the District approved construction plans.

2.06.4 Performance Assurance Release

The District shall release its interest in public facility performance assurances and any additional performance assurances when a project meets the criteria for construction completion set out in Section 2.08. No partial releases of performance assurances will be given.

2.07 Construction Permit Agreement

A construction permit agreement, in a form approved by District Legal Counsel, shall be fully executed by the Owner and submitted to the District prior to the issuance of the Site Development Permit.

2.08 Project Construction Phase Completion and Acceptance

2.08.1 The construction phase of a project is complete when all of the following criteria are met, where applicable:

a. All components of the sanitary and storm sewer systems have been constructed, tested, and accepted by the District according to the standards described in this Resolution and Order.

b. Water quantity and/or water quality facilities have been constructed, landscaped, and accepted by the District.

c. Vegetated corridors have been established, restored, and enhanced in accordance with the requirements of Chapter 3 of these rules.

d. Post construction erosion control measures as determined by the District have been installed and accepted by the District.

e. As built drawings have been submitted and accepted by the District.

f. Maintenance Assurances have been submitted and accepted by the District.

2.08.2 Substantial Completion

A project shall be deemed substantially complete, and eligible for issuance of sanitary and storm water connection permits, when all the requirements of 2.08.1 are met, with the following exceptions:

a. Construction and testing is completed on those portions of the public sanitary and storm sewer systems required for the systems to function, with the exception of final manhole frame and lid grouting and manhole testing.

b. Water quality and/or water quantity facilities have been constructed according to the approved plans and protected from erosion. The facility vegetation is either established or a planting schedule has been accepted by the District. The planting schedule must include the name of the contractor who will be performing the landscaping work and a date of completion that shall not be more than 120 days from Substantial Completion. As a condition of acceptance of the planting schedule, the District may limit the number of connection permits able to be obtained until the landscaping has been completed. If landscaping has not been completed and accepted within 120 days, no additional sanitary or storm water connection permits shall be issued and no inspections shall be performed until landscaping work has been completed.

c. Vegetated corridors have been established, restored, and enhanced according to the approved plans and protected from erosion. New vegetation is either established or a planting schedule has been accepted by the District. The planting schedule must include the name of the contractor who will be performing the landscaping work and a date of completion that shall not be more than 120 days from Substantial

Completion. As a condition of acceptance of the planting schedule, the District may limit the number of connection permits able to be obtained until the landscaping has been completed. If landscaping has not been completed and accepted within 120 days, no additional sanitary or storm water connection permits shall be issued and no inspections shall be performed until landscaping work has been completed.

e. An as-built performance assurance, in accordance with Table 2-1 has been submitted.

f. A post construction erosion control performance assurance, in accordance with Table 2-1, has been submitted.

2.09 As-Built Drawings

The Owner or Engineer shall submit a full set of reproducible as-built drawings of the project, stamped and signed by the Engineer of Record and in a form acceptable to the District. The as-built drawings shall accurately represent the constructed project as determined by a post-construction survey. As-Built survey notes may be required by the District if a discrepancy is noted between the submitted As-Built drawings and the District inspection notes.

2.10 Maintenance Assurance

2.10.1 Maintenance Assurance Requirement

Maintenance Assurances shall be required for work to ensure post construction quality in accordance with Table 2-2. Assurances shall be in the form of a letter of commitment, bond, or cash deposit in form and substance satisfactory to the District.

2.10.2 Maintenance Assurance Exemptions

Upon request, the District may exempt a project of a governmental unit from the requirements of Section 2.10.

2.10.3 Maintenance Assurance Amount and Duration

Except as allowed in 2.10.2, the amount and duration of the maintenance assurance shall be as identified in Table 2-2.

Table 2-2
Maintenance Assurances

Type of Maintenance Assurance	Purpose	Amount	Required	Duration and Conditions for Release
1. Maintenance Assurance	Ensures correction of defects in materials and workmanship after initial construction	• 10% of the cost of construct all public sanitary and storm sewer systems; PLUS • 100% of the cost to construct all public or private water quality and quantity facilities	• Prior to Release of Performance Assurance	• Released one year after completion and acceptance of construction; and • After correction of all defects identified during the maintenance assurance period
2. Landscaping Maintenance Assurance	Ensures correction of any landscaping defects after initial installation	• 100% of the cost to install all required landscaping; PLUS • 100% of the cost to maintain the landscaping for a period of 2 years	• Prior to Release of Performance Assurance	• Released two years after acceptance of landscaping providing 80% of landscaping is established and healthy
3. Post Construction Erosion Control	Ensures maintenance and effectiveness of EC measures after construction	• 100% of cost to install and maintain post construction erosion control for one year	• Prior to Release of Performance Assurance; and • Prior to issuance of connection permits	• Released one year after completion and acceptance of construction

2.11 Maintenance Period Inspection and Completion

2.11.1 Infrastructure Inspection for One Year Warranty

The District shall perform a visual and video inspection of the gravity storm and sanitary conveyance systems during the one-year warranty period and identify any defects in the systems. The owner shall correct any defects identified prior to conclusion of the one-year warranty period. The maintenance assurance shall not be released until all defects have been corrected and inspected.

2.11.2 Landscaping Inspection for Warranty

a. The District shall inspect the condition of the water quality/quantity facility and Vegetated Corridor landscaping periodically throughout the two-year maintenance period. The District shall provide an interim inspection report to the Owner with a specific summary of any deficiencies. Failure of the District to provide the interim report shall not release the Owner from their responsibility to provide established landscaping at the end of the two-year landscaping maintenance period.

b. If at any time during the warranty period the landscaping falls below 80% survival of trees and shrubs, or 90% aerial coverage by herbaceous plants, or if the amount of undesirable vegetation cover including target non-native species exceeds 10%, the Owner shall remove undesirable vegetation and reinstall all deficient planting at the next appropriate planting opportunity. The two-year maintenance period shall begin again from the date of replanting.

2.11.3 Warranty Period Completion

The one year warranty period shall be complete when all the requirements of Section 2.08.1 have been met, the one-year maintenance assurance period, including any extensions, has expired on all elements of the project, and any repairs required during the maintenance period have been completed and accepted.

2.12 General Administrative Rules

2.12.1 Additional Permits

Nothing in these standards alleviates the need for the Owner to obtain and comply with all required local, special district, state or federal permits. Any required permits for the project issued by other jurisdictions, including but not limited to the Oregon Division of State Lands and the US Army Corps of Engineers, shall be maintained on site and available to District Inspectors upon request.

2.12.2 District Inspection

a. A District representative shall inspect the project as necessary and shall check materials, equipment, and the construction of the project to determine whether the work is proceeding in accordance with the approved plans and the requirements of this Resolution and Order. The purpose of these inspections is to monitor compliance with District construction standards and the inspections are for the benefit of the District.

b. The District does not provide the primary inspection for the project, and only provides a level of inspection necessary to monitor the quality of work being performed by others. The Owner retains primary responsibility for project inspection. The District's role in making inspections is not supervisory and CWS has no responsibility, by virtue of such inspections, for any construction means, methods, or techniques, or compliance with safety requirements, all of which remain the sole responsibility of the Contractor.

2.12.3 Change in Plans/Standards

The District shall have the right to require changes in the plans or in standards contained herein in order to protect the public interest or the normal operations of the District. Such changes shall be required at the sole discretion of the District and may include, but are not limited to, the allowance of new or different materials or products that are equivalent to or better than the product specified in the approved plans.

2.12.4 Guaranty

If the Owner, after notice of defective work, fails within thirty days to proceed to comply with the terms of Section 1.09, the District may have the defects corrected. The Owner's surety or issuer of the performance or maintenance assurances under Section 2.06 and Section 2.10 shall be liable for all expenses incurred, provided, however, that in case of an emergency where, in the opinion of the District, delay would cause serious loss or damage, repairs may be made without notice being given to the Owner, and the Owner and the Owner's surety shall be jointly and severally liable for the cost thereof.

2.12.5 District Maps/Plans Not Guaranteed

The District may provide property owners, engineers, contractors and other members of the public with information from District maps, "as-built" plans, etc. The District does not guarantee and shall not be liable for the accuracy of the measurements, locations or other information on such maps and plans.

2.13 Technical Guidance Documents

The District may develop Technical Guidance documents to provide assistance in compliance with this Resolution and Order. The District shall review the Technical Guidance documents on an annual basis. Review may occur more frequently in order to comply with new laws, regulations, or permit requirements, to correct deficiencies or to respond to changes in technology.

The District may solicit review of the Technical Guidance documents and any revisions by the interested public. Revisions shall become effective upon approval by the General Manager and Director of Conveyance.

Chapter 3

STANDARD DESIGN REQUIREMENTS FOR STORM AND SURFACE WATER AND VEGETATED CORRIDORS

Section 3.00 Introduction

3.01 Application and Interpretation of Chapter

3.02 Sensitive Area and Vegetated Corridor Standards

3.03 Storm Water System: Engineering

3.04 Hydrologic Analysis

3.05 Hydraulic Analysis

3.06 Storm Manhole and Pipe Design Standards

3.07 Inlet Design Standards

3.08 Constructed Channel Design Standards

3.09 Culvert Design Standards

3.10 Outfall Design Standards

3.11 Water Quantity Facility Design Standards

3.12 Water Quality Facility Design Standards

3.13 Flood Management Design Standards

Chapter 3

STANDARD DESIGN REQUIREMENTS FOR STORM AND SURFACE WATER AND VEGETATED CORRIDORS

3.00 Introduction

The purpose of this chapter is to outline design requirements for storm and surface water management. The provisions of this chapter are intended to prevent or reduce adverse impacts to the drainage system and water resources of the Tualatin River Basin. In combination with other state, federal, and local laws and ordinances, these requirements are intended to protect the beneficial uses of waters within the Tualatin River Basin and within the District.

3.01 Application and Interpretation of Chapter

The provisions of this chapter shall apply to storm and surface water systems within the District and City jurisdiction. Interpretations of such provisions and their application in specific circumstances shall be made by the District and City. Any City operating a local program may adopt stricter design specifications within its jurisdiction than the specifications stated in this chapter. No person shall undertake development activities within the District's jurisdiction without first obtaining a Storm Water Connection Permit from the District or its designee pursuant to Ordinance 27 and these rules, or receiving a written determination from the District that no Storm Water Connection Permit is required. Applicants may apply for permits as single project or as part of a master planned activity.

3.02 Sensitive Area and Vegetated Corridor Standards

3.02.1 Service Provider Letter and Permits Required

a. In order to determine if the proposed activity will require a service provider letter, the applicant may apply for a Prescreening Site Assessment. If no Water Quality Sensitive Areas appear to exist on or within 200 feet of the site, then no further site assessment or service provider letter is required. The Prescreening Site Assessment does not eliminate the need to evaluate and protect Water Quality Sensitive Areas if they are subsequently discovered on, or within 200 feet of, the site.

b. Prior to land use application or issuance of building permit for a development activity as defined in section 1.02.14, the Applicant shall secure a service provider letter from the District or its designee, which specifies the conditions and requirements associated with Vegetated Corridors and Sensitive Areas necessary for the District to issue a Storm Water Connection Permit pursuant to Ordinance 27 and these rules and regulations. If allowed by the land use jurisdiction, applicant may begin

the land use permit application process and secure the service provider letter prior to completing the land use permit application.

c. In order to secure a service provider letter from the District, the applicant shall perform a Natural Resource Assessment in accordance with Section 3.02.2. The applicant shall perform a Tier 1, 2 or 3 Alternatives Analysis pursuant to Section 3.02.6 if the proposed site plan can not meet the standards outlined Sections 3.02.3 and 3.02.4.

d. No person shall perform construction without first obtaining a Storm Water Connection Permit from the District or its designee as required pursuant to Ordinance 27, Section 4.B. The Storm Water Connection Permit shall be issued upon District approval of final construction plans showing that all of the applicable conditions from the service provider letter have been met. The Applicant must obtain and comply with all permits and approvals required under applicable local, state and federal law.

e. Exceptions to the process outlined in 3.02.1.a-d include:

1) For lot line adjustments that are not part of a land use or building permit application, and that do not result in any physical development, the Applicant shall complete a Prescreening Site Assessment. If Sensitive Areas appear to exist on or within 200 feet of the site, then further site assessment may be required. The lot line adjustment shall be reviewed by the District / City/ County to ensure the proposed configuration of the lots retain buildable status. Vegetated Corridor conditions shall not apply to the lot line adjustment approval process, but may apply to subsequent land use or development applications on the subject property.

2) For redevelopment, the standards in Section 3.02 shall apply only when the activity alters 10% or more of existing improved impervious area within 100 feet of the Sensitive Area. The process outlined in 3.02.1.a-d shall be followed.

3.02.2 Natural Resources Assessment Required

a. Prior to completion of a land use permit application or building permit issuance for development activity as defined in section 1.02.14, the Applicant shall provide a Natural Resource Assessment for any Sensitive Areas and Vegetated Corridors in accordance with Appendix C: Natural Resource Assessments. The Assessment shall consist of a reconnaissance and site certification. When Sensitive Areas are found to be present, the Applicant shall delineate the Sensitive Areas and determine the width and condition of the Vegetated Corridor. For qualifying projects, the

Applicant may perform a Simplified Site Assessment as described in Appendix C.

b. The Applicant shall measure the Vegetated Corridor as shown in Figure 3.2 and further outlined in Appendix C: Natural Resource Assessments. A minimum of three slope measurements along the Sensitive Area, spaced at no more than 100-foot increments, shall be made for each property for which development is proposed. The District may require additional measurements for sites with highly variable topography. The Applicant shall determine existing corridor conditions per Table 3.2 and Appendix C: Natural Resource Assessments and clearly mark them on scaled plans. The Applicant shall provide photos of the site conditions with the plans.

3.02.3 Sensitive Areas

a. Extent of Sensitive Areas

1) The Applicant shall determine the extent of the Sensitive Area using the methods outlined in Appendix C: Natural Resource Assessments.

2) Local land use codes may require additional natural resource analysis.

b. Requirements and Conditions Within Sensitive Areas

1) No person shall erect any structure, conduct any development or construction activities, establish or maintain any garden or lawn, clear native vegetation, remove non-native invasive vegetation other than with an integrated vegetation management approach, store uncontained hazardous materials, dump or dispose of materials of any kind (including pet waste), or conduct other activities within a Sensitive Area that may negatively impact water quality, except as allowed in 3.02.3.b.2.

2) The following activities are allowed within a Sensitive Area when impact is minimized through choice of mode, sizing, and placement:

a. Maintenance practices and enhancement activities, as defined or permitted by the DSL or COE, are allowed within the Sensitive Area per criteria set forth by DSL and/or COE.

b. Development within the Sensitive Area shall be allowed if the required permits are issued, when necessary, by the DSL and/or the COE.

c. On-site relocation of intermittent streams that drain less than 50 acres and have a perpendicular land slope of less than 25%, provided that the pre-existing discharge point off the site is maintained.

d. As approved by the District or its designee through an alternatives analysis set out in Section 3.02.6 of these rules, the activities listed in Section 3.02.4.b.2), 3), and 4). within Water Quality Sensitive Areas that are not regulated by DSL and the COE.

3) Mitigation shall be required per the DSL and COE rules and regulations or as determined by the District for areas or activities not regulated by COE or DSL.

3.02.4 Vegetated Corridors

a. Extent of Vegetated Corridors

1) The Vegetated Corridor may range from 15 to 200 feet wide, measured horizontally, from the defined boundaries of the Sensitive Area, except where approval has been granted by the District or City/County to modify the width of a portion of the corridor in accordance with section 3.02.4.a.2). Table 3.1 documents the Vegetated Corridor Widths and Figure 3.1 illustrates the requirement.

2) Modifications to the required Vegetated Corridor widths are allowed via averaging or reduction for Corridor areas certified by the District or Designee to be in marginal or degraded condition. Modifications are not allowed for Corridor areas certified by the District to be in good condition. Averaging shall be considered prior to reduction and cannot be used in conjunction with reduction.

a. The maximum encroachment allowed for averaging at a project site is 20% of the frontage length of the Vegetated Corridor by no more than 20% of the required width. The area of encroachment must be replaced at a 1:1 ratio. The replacement area must be incorporated into the remaining Vegetated Corridor on the project site and meet the "Good Corridor Condition" standards as defined in Table 3.2, regardless of its distance from the Sensitive Area.

b. If the Vegetated Corridor extends 125 feet or more from the boundary of the Sensitive Area, and Vegetated Corridor averaging is not practicable, the maximum encroachment allowed for reduction at a project site is 20% of the required Vegetated Corridor width. A stamped geotechnical report confirming that slope stability can be maintained with the reduced setback is

required. The remaining Vegetated Corridor shall be enhanced to meet the "Good Corridor Condition" standards as defined in Table 3.2.

c. When the slope is greater than 25% and the Vegetated Corridor extends 35 feet beyond the break in slope, the outer boundary of the Vegetated Corridor may be reduced from 35 feet to 15 feet beyond the break in slope, as long as the resulting Vegetated Corridor is no less than 50 feet beyond the edge of the Sensitive Area. This reduction is allowed only if a stamped geotechnical report confirms that slope stability can be maintained with the reduced setback from the break in slope.

3) If trees or native vegetation have been cleared from the Vegetated Corridor or Sensitive Area prior to applying for development and without District/City/County approval, the maximum Vegetated Corridor widths for the resource type and pre-existing site condition will apply. Mitigation and enhancement of the entire impacted Sensitive Area and/or Vegetated Corridor will be required for the full extent of the Sensitive Area and/or Vegetated Corridor in the impacted area. The following mitigation requirements shall apply to sites where native vegetation has been removed from Vegetated Corridors or Sensitive Areas without prior authorization:

   a. Trees removed shall be replaced with a number of trees equal to the caliper divided by the largest size reasonably available, for a 1:1 replacement by caliper size. Tree density for the plant community shall meet or exceed the good corridor condition standard outlined in Table 3.2 and Appendix D, Table 1.

   b. Shrub and herbaceous material replacement shall meet the good corridor condition standard outlined in Table 3.2 and per Appendix D, Table 1: Plant Communities for Revegetation.

4) The requirements of 3.02.4.a.3 do not apply to:

   a. The removal of "hazard" trees if they threaten a structure or public area. Hazard trees shall be topped and standing trunks retained, if possible.

   b. Vegetated Corridors or Sensitive Areas in which clearing occurred prior to February 22, 2000.

5) The Vegetated Corridor shall not be required to extend beyond an existing building or improved roadway separating the proposed development from the Sensitive Area. For the purposes of this section,

an "improved roadway" shall be gravel or paved, a minimum of 12-feet in width, and actively used for vehicular traffic. The building or roadway must remain as part of the proposed development and not planned for future demolition.

6) If the proposed activity is redevelopment and alters 10% or more of existing improved impervious area within 100 feet of the Sensitive Area, then a 25-foot Vegetated Corridor for streams, springs and wetlands, and a 50-foot Vegetated Corridor for the Tualatin River shall apply per Table 3.1. Vegetated Corridor averaging is permitted per 3.02.4.a.2.a and shall exclude any existing building footprint area already encroaching into the Vegetated Corridor. Exceptions to the Vegetated Corridor requirement on redevelopment sites include:

   a. Redevelopment of a single family residence is exempt, unless redevelopment is changing use (to commercial/ multifamily/ industrial, etc), or proposing to encroach further into the Vegetated Corridor.

   b. Redevelopment of an existing impervious area fully separated from the resource by a building (i.e. building divides the activity from the Sensitive Area) are exempt.

   c. Properties with pre-existing Vegetated Corridors or setbacks averaging at least 25 feet from streams and 50 feet for the Tualatin River, may maintain the pre-existing Vegetated Corridor width. Enhancement of existing Vegetated Corridor to good condition is required, if not already in good condition.

   d. Properties bordering wetlands at least 25 feet from stream may utilize the wetlands as the Vegetated Corridor. Enhancement of wetlands to a good condition for a width of 25 feet towards the stream is required, if not already in good condition.

b. Requirements and Conditions within a Vegetated Corridor

   1) No person shall erect any structure, conduct any development or construction activities, establish or maintain any garden or lawn, clear native vegetation, remove non-native invasive vegetation other than with an integrated vegetation management approach, store uncontained hazardous materials, dump or dispose of materials of any kind (including pet waste), or conduct other activities within a Vegetated Corridor which may negatively impact water quality, except as allowed in Section 3.02.4.b.2) and 3).

2) Upon review and approval by the District or Designee and other appropriate regulatory authorities, the following activities are allowed within a Vegetated Corridor when impact is minimized through choice of mode, sizing and placement.

a. Roads, pedestrian or bike paths crossing the Vegetated Corridor from one side to the other in order to provide access to the Sensitive Area or across the Sensitive Area;

b. Utility/service provider infrastructure construction (i.e. storm drainage, sanitary sewer, service laterals, outfalls, water, phone, gas, cable, etc.) Infrastructure construction shall not remove native trees greater than 6" dbh.

c. Stormwater facilities planted with appropriate native vegetation. Storm water facilities may encroach into the Vegetated Corridor in accordance with the Vegetated Corridor averaging or reduction allowances set out in Section 3.02.4.a.2); they may be integrated within a Vegetated Corridor of an intermittent stream draining less than 50 acres and having a slope less than 25%. Refer to Appendices B and D for design criteria and guidance.

d. An access way, path, or sidewalk (referred to as "path" henceforth) 10 feet or less in width. When the path is greater than 3 feet in width, the square footage of the excess path width shall be mitigated at a 1:1 ratio by enhancing additional Vegetated Corridor to a good condition. The following conditions apply to all paths:

1) The path shall avoid the Vegetated Corridor where possible.
2) The path shall be located in the outermost 40% of the Vegetated Corridor boundary as it runs near or parallel to the Sensitive Area.
3) Paths shall be constructed so as to minimize disturbance to existing vegetation and maintain slope stability;.

e. Grading for the purpose of enhancing the Vegetated Corridor;

f. Grading for purposes other than enhancement may occur under the following conditions:

1) The vegetated corridor condition is degraded,

2) The proposed grading is consistent with native ground,
3) The proposed grading does not result in the removal of native vegetation, and
4) The graded slopes are no more than 4H:1V;

g. Other uses, not listed in a) through f) above, as approved by the District or its Designee through an alternatives analysis process as described in Section 3.02.6.

3) District review for Vegetated Corridors is not required for the following activities. Other regulating jurisdictions may require review and approval.

a. Activities excluded from the definition of development in Section 1.02.14.b;

b. Enhancement of the riparian corridors for water quality or quantity benefits, and aquatic habitat;

4) Mitigation for negative impacts to the Vegetated Corridor and/or enhancement of the Vegetated Corridor to a "good" condition, as defined in Table 3.2, is required for activities identified in Section 3.02.4.b.2) and Chapter 12. Replacement mitigation, if required shall be at a 1:1 ratio or greater. Refer to Appendix D: Landscape Requirements for revegetation requirements.

5) When impact to Sensitive Areas is permitted by DSL and COE:

a. The Vegetated Corridor impact area shall be calculated based on the site conditions as they exist prior to the proposed impact and mitigated at a minimum 1:1 ratio either on site or in association with the required DSL / COE mitigation.

b. If Payment to Provide is approved by DSL for Sensitive Area impact, then Applicant shall provide a 1:1 replacement of the Vegetated Corridor as mitigation for impacted area or apply for Vegetated Corridor Payment to Provide. Applicant may pay a Vegetated Corridor Payment to Provide to the District, per the District's Rates and Charges Ordinance. The Payment will be assigned to an enhancement project within the subwatershed in which the impact occurs.

6) Wetlands may not be filled in order to create, expand, or eliminate a Vegetated Corridor.

3.02.5 General Requirements for Sensitive Areas and Vegetated Corridors

a. Prior to any site clearing, grading or construction, the Applicant shall survey, stake, and demarcate with standard orange construction fencing or equivalent the outer boundary of the combined Sensitive Area and Vegetated Corridor per approved plan. During construction the outer boundary of the combined Sensitive Area and Vegetated Corridor shall remain fenced and undisturbed except as allowed in Section 3.02.4.b and per approved plans.

b. For any development which creates multiple parcels or lots intended for separate ownership, the Sensitive Area and Vegetated Corridor shall be contained in a separate tract. The first 50 feet of Vegetated Corridor on intermittent streams draining 10-100 acres shall be contained in a separate tract; the remainder may be placed in an easement. The District, City, or County may also require that the Sensitive Area and Vegetated Corridor be signed, fenced, or otherwise physically set apart from parcels that will be developed. Signage for Sensitive Areas shall meet the requirements of Standard Detail No. 275. Signs may also be available for purchase from the District.

c. The District or City/County may require an easement over the Sensitive Area and Vegetated Corridor for surface and storm water management in order to prevent the owner of the Sensitive Area and Vegetated Corridor from carrying out activities and uses inconsistent with the purpose of the corridor and any easements therein.

d. The Applicant shall protect and enhance the Sensitive Area and Vegetated Corridor in accordance with the requirements listed in Table 3.2 and Appendix D: Landscape Requirements, per approved plans. For Vegetated Corridors 50 feet and greater in width, the Applicant shall enhance the first 50 feet closest to the Sensitive Area to meet or exceed "good" corridor condition as defined in Table 3.2. For Vegetated Corridors less than 50 feet wide, the Applicant shall enhance the entire corridor to meet or exceed "good" corridor condition as defined in Table 3.2.

e. The Applicant shall adequately protect drainage ditches that drain surface water systems or storm water infrastructure from erosion and, to the extent possible, integrate the appearance of such ditches into the Sensitive Area and Vegetated Corridor through the use of native vegetation and rock/wood placement.

3.02.6 Alternatives Analysis

a. The Applicant shall conduct an Alternatives Analysis if the proposed site plan can not meet the standards outlined in Section 3.02.4 and 3.02.5. In conducting the Alternatives Analysis:

1) The Applicant shall prepare the Submittal Requirements outlined in this section for the type of encroachment proposed;

2) The Applicant shall participate in one or more meetings with the District and City or County to negotiate the Vegetated Corridor encroachment and mitigation;

b. The District shall review the alternatives analysis pursuant to the Criteria for Acceptance as outlined in this section for the type of encroachment proposed; and

c. The District or its designee shall prepare a service provider letter documenting the results of the alternatives analysis and District's requirements necessary to comply with water quality protection.

d. Tier 1 Alternatives Analysis: For marginal or degraded Vegetated Corridors with encroachment up to 40% of the length by 30% of the width:

1) Submittal requirements

a. Natural Resource Assessment performed pursuant to Appendix C: Natural Resource Assessments and Section 3.02.2 of these rules.

b. Site Plan showing entire site with encroachment area and calculations of Vegetated Corridor encroachment and mitigation areas/plan.

c. Description of why the encroachment is needed.

2) Criteria for Acceptance

a. Encroachment area is mitigated by at least a 1:1 ratio on site.

b. Enhancement of the replacement area if not already in good condition, and either the remaining Vegetated Corridor on the project site or the first 50 feet of width closest to the resource, whichever is less, to a "good" corridor condition per Table 3.2 and Appendix D: Landscape Requirements.

c. District or its designee's Storm Water Connection Permit is likely to be issued based on proposed plans.

d. Location of development and site planning minimize incursion into the Vegetated Corridor; and

e. There is no practicable alternative to the location of the development that will not disturb the Sensitive Area or Vegetated Corridor.

c. Tier 2 Alternatives Analysis: For any good Vegetated Corridor encroachment or marginal/degraded Vegetated Corridor with encroachment greater than 40% of the length by 30% of the width and for activities listed in Section 3.02.4.b.2) which are proposed to occur within the Water Quality Sensitive Area.

1) Submittal requirements

a. Natural Resource Assessment performed pursuant to Appendix C: Natural Resource Assessments and Section 3.02.2 of these rules.

b. Site Plan showing entire site with encroachment area and calculations of water quality Sensitive Area and/or Vegetated Corridor encroachment and mitigation areas.

c. Description of why the encroachment is needed; and

d. Functional Analysis Report; see Appendix C 4.2.f.2

2) Criteria for Acceptance

a. Encroachment area is mitigated by a 1:1 ratio or greater and is located either on-site or off-site along the same stream or its watershed;

b. The mitigation protects the functions and values of the Sensitive Area and Vegetated Corridor;

c. Enhancement of the replacement area if not already in good condition, and either the remaining Vegetated Corridor on the project site or the first 50 feet of width closest to the resource, whichever is less, to a "good" corridor condition per Table 3.2 and Appendix D: Landscape Requirements;

d. A District or its designee's Storm Water Connection Permit is likely to be issued based on proposed plans;

e. Location and site planning minimizes encroachment into the Vegetated Corridor;

f. There is no practicable alternative to the requested development which will not disturb the Sensitive Area or Vegetated Corridor;

g. There are public benefits of the encroachments; and

h. If the application of these Vegetated Corridor regulations results in a lot being unbuildable the Vegetated Corridor shall be reduced to assure the lot will be buildable while still providing for the maximum Vegetated Corridor to the greatest extent practicable.

f. Tier 3 Alternatives Analysis: For Vegetated Corridors with pre-existing encroachment (Redevelopment as defined in Section 1.02.46):

1) Submittal requirements

a. Natural Resource Assessment performed pursuant to Appendix C: Natural Resource Assessments and Section 3.02.2 of these rules.

b. Site Plan showing entire site with encroachment area (including existing and proposed areas) and calculations of Vegetated Corridor encroachment and mitigation areas/plan if applicable.

c. Description of why the encroachment is needed under proposed redevelopment plan.

2) Criteria for Acceptance

a. Encroachment area is mitigated by at least a 1:1 ratio on site or off-site, or a Payment to Provide for Vegetated Corridor mitigation is applied.

b. Enhancement of the remaining Vegetated Corridor on the project site or the first 50 feet of width closest to the resource, whichever is less, to a "good" corridor condition per Table 3.2 and Appendix D: Landscape Requirements.

c. District or its designee's Storm Water Connection Permit is likely to be issued based on proposed plans.

d. Location of the redevelopment and site planning minimize incursion into the Vegetated Corridor; and

e. There is no practicable alternative to the location of the redevelopment that will not disturb the Sensitive Area or Vegetated Corridor.

3.02.7 Tables and Figures

Table 3.1 Vegetated Corridor Widths

Sensitive Area Definition*	Land Slope Perpendicular to Sensitive Area	Width of Vegetated Corridor per Side
Figure 3.1 - Graphic 1		
• Streams with intermittent flow draining:		
• 10 to <50 acres	< 25%	15 feet
• ≥50 to 100 acres		25 feet
• Existing or created wetlands < 0.5 acre	<25%	25 feet
Figure 3.1 - Graphic 2		
• Existing or created wetlands ≥ 0.5 acre • Streams with perennial flow • Springs with perennial flow • Streams with intermittent flow draining >100 acres • Natural lakes, ponds, and in-stream impoundments	<25%	50 feet
Figure 3.1 - Graphic 3		
• Tualatin River	<25%	125 feet
Figure 3.1 - Graphic 4		
• Springs with intermittent flow	≥ 25%	15 feet
• Existing or created wetlands • Tualatin River • Streams with perennial flow • Streams with intermittent flow draining >100 acres • Springs with perennial flow • Natural lakes, ponds, and in-stream impoundments	≥25%	Variable from 50-200 ft**
Figure 3.1 - Graphic 5		
• Streams with intermittent flow draining 10-100 acres	≥25%	Variable from 50-200 ft***
Figure 3.1 – Graphic 6		
• Redevelopment sites adjacent to Water Quality Sensitive Areas other than the Tualatin River	<25%	25 feet
• Redevelopment sites adjacent to the Tualatin River	<25%	50 feet

* See Chapter 1: Definitions for Sensitive Area, Intermittent and Perennial Flow

** Measured in 25-foot increments from the edge of the Sensitive Area to the break in slope (i.e. <25%). Add 35 feet past the break in slope to determine the Vegetated Corridor width, not to exceed 200 feet. For land divisions, the entire Vegetated Corridor must be contained in a tract.

*** Measured in 25-foot increments from the edge of the Sensitive Area to the break in slope (i.e. <25%). Add 35 feet past the break in slope to determine the Vegetated Corridor width, not to exceed 200 feet. For land divisions, the first 50 feet closest to Sensitive Area must be placed in a tract; remaining area may be contained in easement.

Figure 3.1 Vegetated Corridor Width

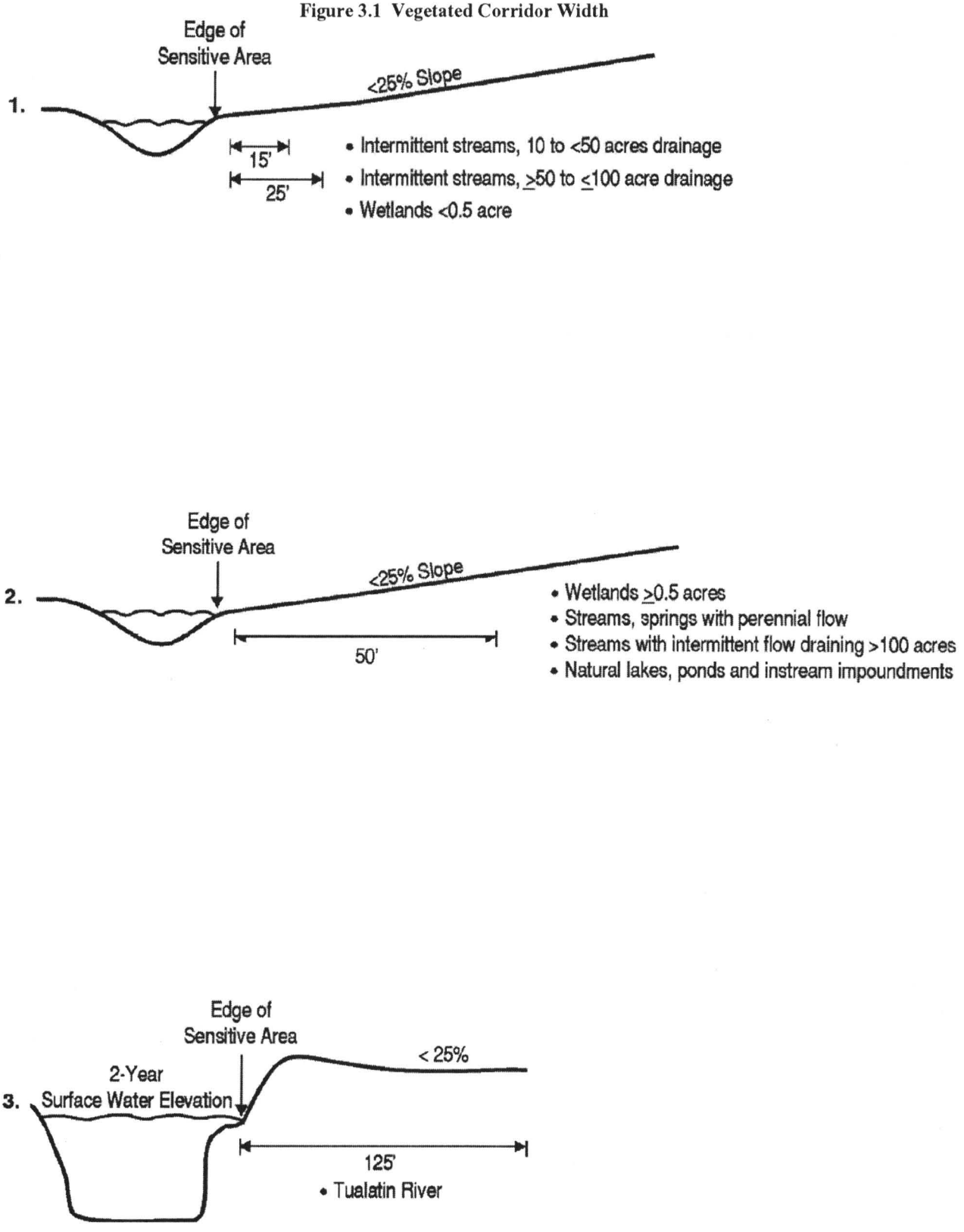

Figure 3.1 (continued)

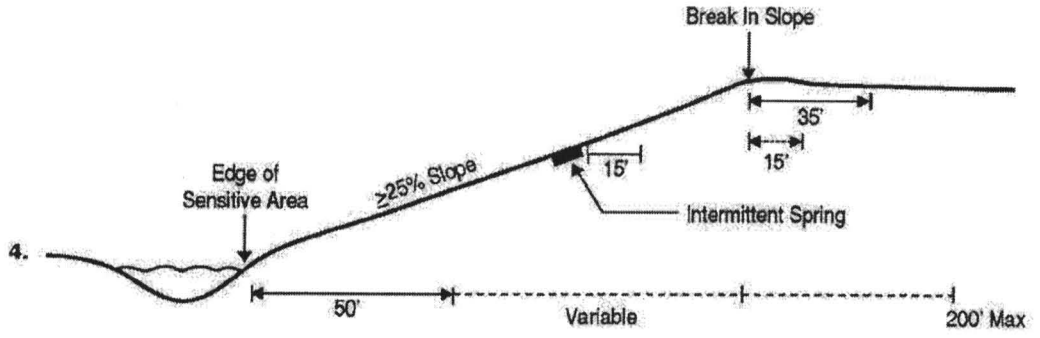

- Wetlands
- Tualatin River, streams, springs with perennial flow
- Streams with intermittent flow draining > 100 acres
- Natural lakes, ponds and instream impoundments

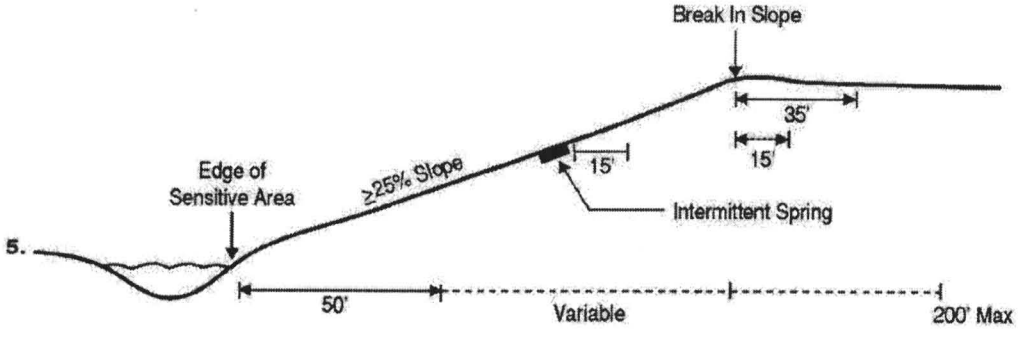

- Streams with intermittent flow draining 10 to 100 acres.

  First 50' in tract and remaining area in easement (easement limits tree/vegetation removal, no staging, grading, stockpiling)

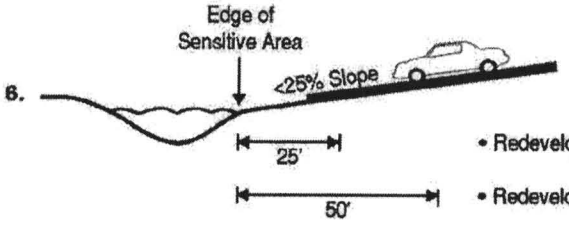

- Redevelopment sites on streams, springs, wetlands, lakes, ponds
- Redevelopment sites on Tualatin River

Figure 3.2 Vegetated Corridor Measurement Methodology

1) Measure 50 feet horizontally from the Edge of the Sensitive Area (see Table 3.1).

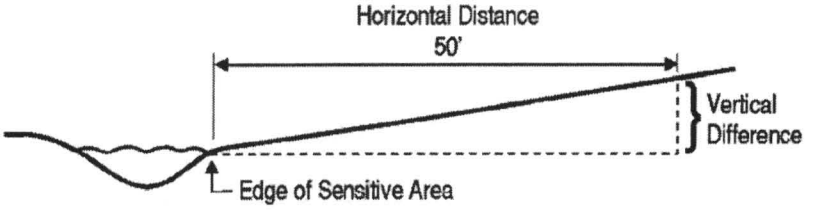

2) Determine the slope
(Vertical difference/Horizontal distance) * 100 = percent slope

3) If slope is < 25%, apply the vegetated corridor per Table 3.1

(a) If stream or spring is intermittent, measure the drainage area from the upstream drainage point of the development determine appropriate width application. The width of the Vegetated Corridor may widen as it proceeds downstream, if the drainage acreage increases past the various acreage cut-off points outlined in Table 3.1.

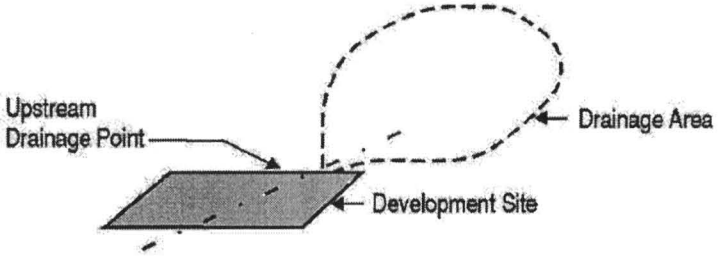

Figure 3.2 Vegetated Corridor Measurement Methodology (cont'd)

4) If the slope is > 25%, measure another 25 feet horizontally and perpendicular to the starting point up the slope until *either*:

   (a) A slope is encountered that is less than 25%. In this case, determine the break in slope and add an additional 35 feet to mark the outside boundary of the Vegetated Corridor; *or*

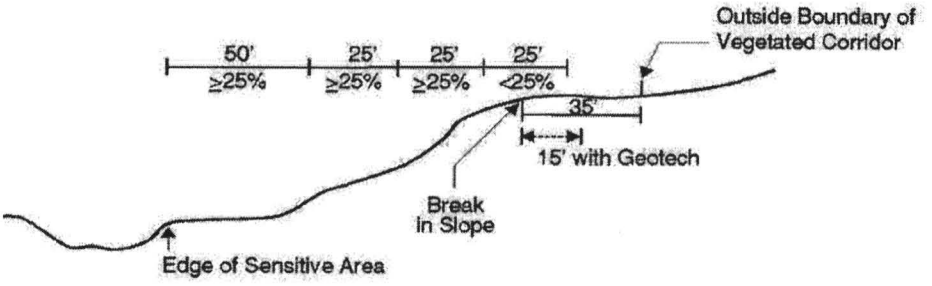

   (b) 200 feet is reached (all slope measurements >25%).

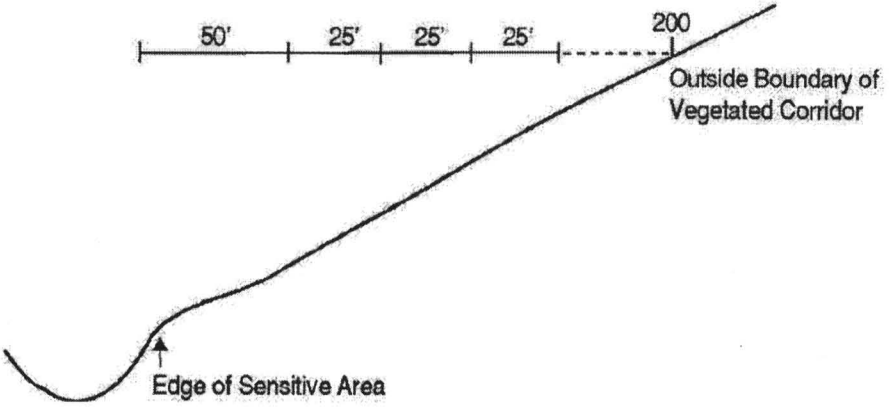

Table 3.2 Vegetated Corridor Standards

Vegetated Corridor Condition Definition[1]	Requirements of Vegetated Corridor Protection, Enhancement, and/or Mitigation
Good Corridor Condition • Combination of native trees, shrubs, and groundcover covering greater than 80% of the area and greater than 50% tree canopy exists (areal measure)	• Provide certification, per Appendix C: Natural Resource Assessments, to District or City/County that the vegetated corridor meets condition criteria. • Remove any invasive non-native species[2] within the corridor by hand and revegetate cleared area using low impact methods.[3] • If impact is to occur, provide District or City/County with a native plant revegetation plan appropriate to the site conditions developed by an ecologist/biologist or landscape architect to restore condition. See Appendix D: Landscape Requirements. • Revegetate impacted area per approved plan to re-establish "good" corridor conditions
Marginal Corridor Condition • Combination of native trees, shrubs, and groundcover covering 50%-80% of the area and 26-50% tree canopy exists (areal measure) (Enhancement up to "good" corridor condition required regardless of planned impact)	• Provide certification, per Appendix C: Natural Resource Assessments, to District or City/County that the vegetated corridor meets condition criteria. • Remove any invasive non-native species within the corridor by hand or mechanically with small equipment, to minimize damage to existing native vegetation.[2] • Provide District or City/County with a native plant revegetation plan appropriate to the site conditions developed by an ecologist/biologist or landscape architect to restore to a good corridor condition. See Appendix D: Landscape Requirements. • Vegetate corridor to establish "good" corridor conditions
Degraded Corridor Condition • Combination of native trees, shrubs, and groundcover covering is less than 50% of the area and less than 25% tree canopy exists (areal measure) (Enhancement up to "good" corridor condition required regardless of planned impact)	• Provide certification, per Appendix C: Natural Resource Assessments, to District or City/County that the vegetated corridor meets condition criteria. • Remove any invasive non-native species within the corridor by hand or mechanically.[2] • Provide District or City/County with a native plant revegetation plan appropriate to the site conditions developed by an ecologist/biologist or landscape architect to restore to a good corridor condition. See Appendix D: Landscape Requirements. • Vegetate Corridor to establish "good" corridor conditions

[1] When a single plant community type contains multiple condition characteristics, the higher quality condition shall prevail

[2] See Appendix C for plant lists and references.

[3] Refer to Integrated Vegetation Management Guidelines for appropriate methodology

Figure 3.3 Vegetated Corridor Averaging Example

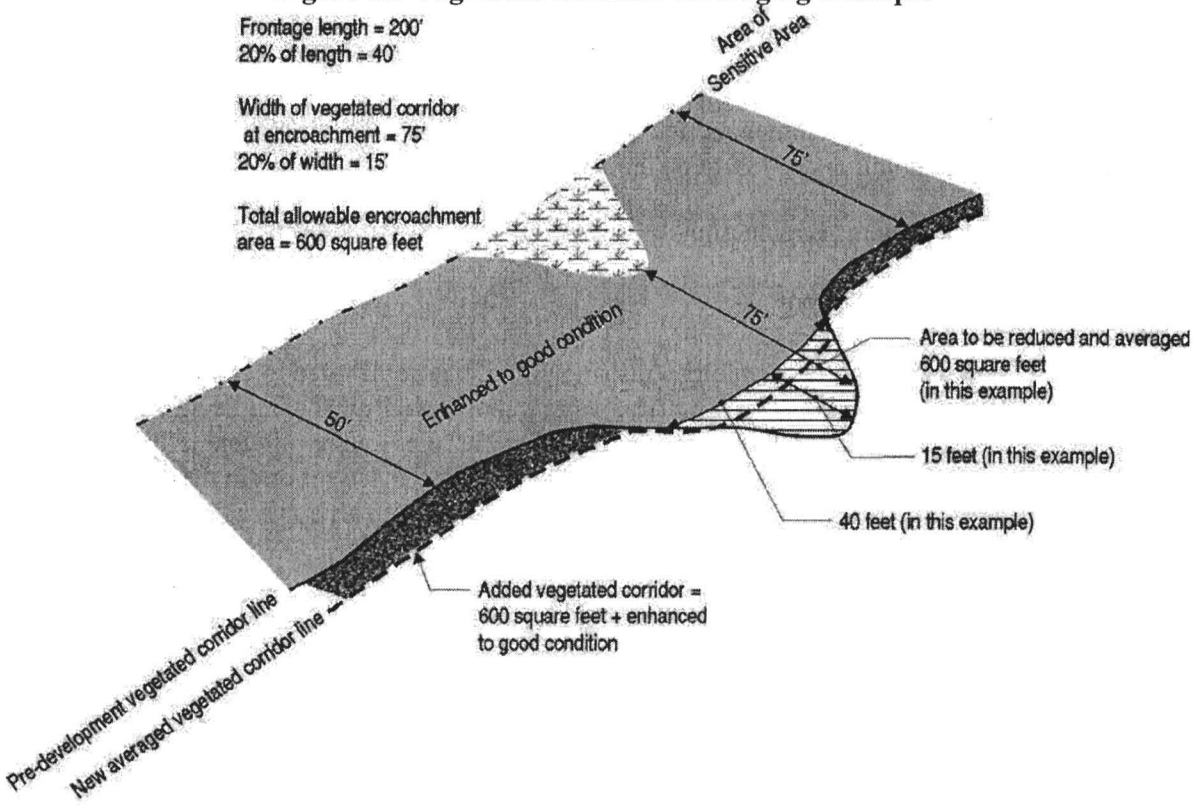

Figure 3.4 Vegetated Corridor Reduction Example

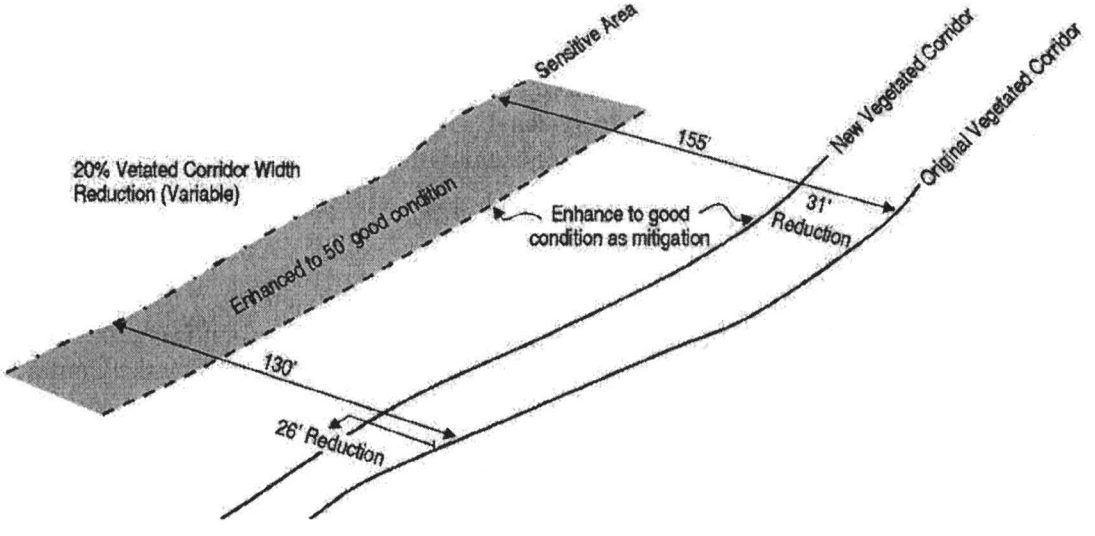

3.02.8 Enforcement

Failure to comply with any provision of Section 3.02 or with any term of a Storm Water Connection Permit shall be deemed a violation of this ordinance and subject to enforcement action pursuant to applicable District and City Ordinance and Resolutions and Orders, including all implementing rules and regulations.

3.03 Storm Water System: Engineering

3.03.1 General Provisions

All stormwater system elements (including, but not limited to conveyance systems, water quality facilities, water quantity facilities) shall be designed and constructed in accordance with all applicable rules and regulations of the District, and any District interpretations thereof including those set out in the Appendices and applicable technical guidance manuals, and with all applicable federal, state and local statues and rules.

3.03.2 Extension of Public Storm Sewer Systems

Public storm sewer systems shall be extended to the most distant upstream parcel boundary(s) to accommodate current and future storm flows entering the property, unless otherwise approved by the District or City. Except as otherwise provided, the extension of the public stormwater systems to serve any parcel or tract of land shall be done by and at the expense of the Property Owner or applicant. The District or City may require that a storm pipeline that serves or may serve more than one property be a public system.

3.03.3 Surveying

The Owner's Engineer or Surveyor shall be responsible for establishing the location of the storm sewer system by means of construction stakes offset along the center lines prior to commencement of construction.

3.03.4 Railroad Crossings

Crossing of railroad rights-of-way shall be done in a manner that conforms to the requirements of the railroad having jurisdiction. If any bonds and/or certificates of insurance protection are required, they shall be furnished by the Contractor or Owner to the railroad company concerned naming the District or City as an additional insured.

Actual permits or easements for such crossings shall be obtained by the Owner and all the terms for such permits or easements shall be met by the Owner and

Contractor.

3.04 Hydrologic Analysis

The hydrologic analysis shall be consistent with Appendix A: Hydrology and Hydraulics. The engineer may use various computer models or formulas for the hydrograph analysis but the District may verify the design flows and volumes based on King County's SBUH program "HYD" or as alternatively identified in Appendix A: Hydrology and Hydraulics.

3.05 Hydraulic Analysis

3.05.1 General

The method of hydraulic calculations shall be subject to District and/or City approval and shall be consistent with the CWS Appendix A: Hydrology and Hydraulics.

3.05.2 System Design Considerations

Site development improvement projects shall address on-site and off-site drainage concerns, both upstream and downstream of a project, including but not limited to the following:

a. Modifications to the existing on-site storm drainage facilities shall not restrict flows creating backwater onto off-site property to levels greater than the existing situation unless approved by the impacted off-site property owners and the District or City. The off-site property owner(s) shall agree to and sign a permanent easement legally describing the location of the backwater storage and authorizing the use of their property for stormwater drainage and detention purposes. The easement shall be in a form approved by the District or City.

b. Storm drainage facilities shall be designed and constructed to accommodate all future full build-out flows generated from upstream property based upon the most recent approved County Comprehensive Land Use Plan and upon the most recent and technically accurate watershed model information available from the District, or other data as approved by the District.

c. The design of storm drainage facilities shall analyze the impact of restrictions downstream of the project site, in accordance with Section 3.05.3. Downstream restrictions that create on-site backwater may be required to be removed by the developer, at the District's discretion, or the on-site backwater shall be addressed in the design of the development's storm system. The removal of downstream obstructions shall not be allowed if this removal creates downstream capacity problems.

d. If the projected increase in surface water runoff leaving a proposed development will cause or contribute to damage from flooding to existing buildings or dwellings, the downstream stormwater system shall be enlarged to relieve the identified flooding condition prior to development, or the developer must construct an on-site detention facility.

3.05.3 Review of Downstream System

a. For each development constructing new impervious surface of more than 5,000 square feet, or collecting and discharging more than 5,000 square feet of impervious area, the design engineer shall submit documentation, for review by the District, of the downstream capacity of any existing storm facilities impacted by the proposed development, except for the construction of a detached single family dwelling or duplex. The design engineer must perform a capacity and condition analysis of the drainage system downstream of the development.

1) The analysis shall extend downstream to a point in the drainage system where the additional flow from the proposed development site constitutes 10 percent or less of the total tributary drainage flow.

2) If the additional flow from the proposed development drops to less than 10 percent of the total tributary drainage flow then the analysis will continue for the lesser of:

a) One-quarter (1/4) of a mile;
or
b) Until the additional flow constitutes less than 5 percent of the total tributary drainage flow.

b. When the downstream analysis does not continue for at least one-quarter (1/4) mile, the design engineer will provide a stamped Certification of Investigation that states the design engineer has visually investigated the downstream system for at least one-quarter (1/4) mile downstream and is aware of no observable downstream impacts to structures.

3.05.4 Conveyance System Hydraulic Standards

The conveyance system shall be designed to convey and contain at least the peak runoff for the 25-year design storm. Structures for proposed pipe systems must be demonstrated to provide a minimum of 1.0 foot of freeboard between the hydraulic grade line and the top of the structure or finish grade above pipe for 25-year post development peak rate of runoff. Design surcharge in pipe systems shall not be allowed if it will cause flooding in portions of a habitable structure,

including below-floor crawl spaces, or otherwise create a hazard or danger to the health and safety of the public.

The 25-year design shall be supplemented with an overland conveyance component demonstrating how a 100-year event will be accommodated. This overland component shall not be allowed to flow through or inundate an existing building. Flows in streets during the 25-year event shall not run deeper than 4 inches against the curb or extend more than two feet into the travel lane.

Open channel systems shall be designed for minimum one foot freeboard from bank full provided no structures are impacted by the design water surface elevation.

3.05.5 Catch Basin System Standards

a. Standard Catch Basin System: All catch basins shall be sumped. The main storm line shall not pass through any catch basins or sumped manholes unless approved by the District. No more than three catch basins may be connected in series before connecting to the main storm line. A ditch inlet or field inlet may be connected directly to the end of the main storm line.

b. Series Catch Basin System: Unsumped catch basins are allowed, provided a sumped manhole is constructed below the unsumped catch basins before the flow enters the main storm line. No more than three unsumped catch basins may be constructed above a sumped manhole. The main storm line may not pass through the catch basins or sumped manholes. No ditch inlet or field inlet may be part of a series of unsumped catch basins.

c. Flow-through Catch Basin System: This system is allowed within an arterial or major collector road, provided the main line storm pipe has a design velocity of at least three (3) feet per second. Unsumped catch basins, ditch inlets, and field inlets which are properly channelized are allowed to connect directly to the main storm line. An adequately sized water quality manhole is required at the downstream end of the flow-through system.

3.06 Storm Manhole and Pipe Design Standards

3.06.1 Application

For pipe systems which convey flows from or through water quality sensitive areas; a local representative of Oregon Department of Fish and Wildlife (ODFW) or other applicable state or federal agency shall be contacted to determine if fish passage is required and to identify site specific design criteria. All culverts shall be designed for fish passage in accordance with ODFW guidance for Fish Passage

unless otherwise exempted by ODFW and the District/City.

3.06.2 Manhole Design

a. Manholes shall be provided at least every 500 feet, at every grade change, and at every change in alignment. Unless an exception is approved by the District, City or County, manhole lids shall have a minimum of 12 inches of clearance from the edge of a curb and/or gutter and shall not be in a wheel path of the traveled way.

b. All manholes shall be a minimum of 48 inches in diameter.

c. All piped inside drop manholes with 12-inch or larger pipe shall be a minimum of 60 inches in diameter.

d. Detail(s) shall be submitted with the plans where pipes into or out of a manhole are larger than 24 inches or where more than four mainline connections are made. There shall be a minimum of 8 inches of unperforated wall separating the cut-outs or break-outs for the individual pipe connections.

e. Connections to an existing manhole, elevation of the existing ledge, location of steps, and elevations of existing inlets and outlets shall be submitted with the plans.

f. All manhole bases shall be properly channelized. No more than three side laterals are allowed to be connected to a manhole unless an exception is approved by the District or City. There shall be a minimum of 8 inches of unperforated wall separating the cut-outs or break-outs for the individual pipe connections.

g. A Curb Inlet Manhole or Modified Curb Inlet Manhole per Standard Details may be used in lieu of a manhole required by Section 3.06.2, when approved as part of a flow-through system. Standard inlets will not be allowed in lieu of manholes in any system.

h. Pipes entering manholes may have a maximum free fall of 4 feet as measured to the invert of the manhole base.

i. Permanent Clean Outs shall not be allowed in storm sewer systems. Temporary Clean Outs will be evaluated on a case-by-case basis.

3.06.3 Water Quality Manholes

Water Quality Manhole design shall be consistent with Appendix B: Water Quality and Quantity Facility Design.

3.06.4 Pipe Size

a. The design size shall be based on hydraulic calculations provided by the design engineer. The minimum diameter of public storm pipe is identified below.

1) Pipe from catch basins to the main line in the public right-of-way shall be nominal 10-inch diameter.

2) Main line pipe shall be a minimum nominal 12-inch diameter. Where there is no requirement to extend the pipe for adjacent development, the main line pipe diameter may be nominal 10-inch diameter for the furthest upstream section, provided that a 10-inch pipe is adequate for flow.

3) Storm pipes located out of a public street right-of-way, with no requirement to be extended, and with roof drains and/or area drains connected, shall be a minimum 8-inch diameter pipe.

3.06.5 Location of Pipe

a. When storm drain pipes are located within a local public street right-of-way with curbs, the storm pipe shall be located between the curbs but not closer than five feet to either curb unless an exception is approved by the District or City.

b. Storm pipes may be located behind and parallel to the curb on collector streets and arterial streets with the approval of the District or City.

c. Storm pipes in easements shall be located in the center of the easement unless an exception is approved by the District or City. The centerline of a storm pipe shall be at least five feet from an easement side line.

d. The minimum separation distance between storm pipe alignments and other utilities shall be 5 feet (clear). If vertical separation between utilities is greater than 3 feet, additional horizontal spacing may be required to allow for maintenance access.

3.06.6 Distance Between Structures

a. For 8-inch and larger pipe, the maximum distance between manholes, excluding cleanouts, shall be 500 feet.

b. The maximum distance between area drains and catch basins shall be 250 feet.

3.06.7 Alignment

Public storm pipe shall be laid on a straight alignment and at uniform grade.

3.06.8 Grade

Storm lines shall have sufficient slope to maintain a minimum flow velocity of 2.5 feet per second when flowing full, except that storm lines in flow-through systems shall have a minimum flow velocity of 3 feet per second.

3.06.9 Steep Slopes

Storm pipes on slopes in excess of 20 percent shall be secured with approved anchor walls, see Standard Details.

3.06.10 Pipe Cover

Minimum pipe cover shall be in compliance with this section unless an exception is approved by the District, City, or County.

In paved areas or areas anticipated to receive vehicular traffic, pipe cover shall be measured from the top of the paved surface (finish grade) to the upper surface of the pipe barrel. The pipe bell shall not intrude into the subbase. In areas without pavement or vehicular traffic, pipe cover shall be measured from finish grade to the upper surface of the pipe barrel. Minimum cover requirements are contained in the following table:

Type of Pipe	Paved Areas(in)	Unpaved Areas (in)
Non-reinforced Pipe	48	36
RCP Class III	30	18
RCP Class IV	24	12
RCP Class V	18	6
AWWA C900	24	12
AWWA C905	24	12
Ductile Iron	18	6

3.06.11 Headwalls

Pipe headwalls or other approved end protection shall be required where pipe material other than concrete or ductile iron is exposed in the design of an outlet or inlet pipe or where required to stabilize slope. Details of all headwalls and end protection shall be included in the construction drawings.

3.06.12 Trash Racks/Debris Barriers

If trash racks/debris barriers are required by the District/City for pipe or culvert systems, the Engineer shall submit the trash/rock/debris barrier system design to the District/City for approval.

3.07 Inlet Design Standards

3.07.1 Inlet and Catch Basin Capacity

All inlets and catch basins shall be designed to accept a 10-year storm event. Grates shall, as far as practical, be designed to avoid failure due to accumulation of debris.

3.07.2 Design Criteria

a. Precast and poured in place catch basins, and gutter inlets are allowed.

b. All catch basins shall be constructed with an 18-inch minimum sump unless part of a series catch basin system or a flow-through catch basin system and approved by the District under Section 3.05.5.

c. A main storm line shall not pass through a sumped catch basin.

d. The spacing of catch basins shall be determined by the capacity of each catch basin to pass a 10-year storm event. Where finish street grade is greater than or equal to five percent, catch basin spacing shall not exceed 300 feet. In addition, catch basin shall be provided just prior to curb returns on streets with a centerline gradient of three percent or more and a street gutter drainage run of 100 feet or more.

e. Catch basins, except for CG-48 shall be a maximum depth of 5 feet from the top of grate to the lowest pipe invert elevation.

f. The maximum length of pipeline between the inlet and a mainline structure shall be 40 feet for 10-inch pipe and 60 feet for 12-inch pipe unless additional length is required to cross the street right-of-way.

g. Tee connections may only be used in street rights-of-way if the

jurisdiction having authority over the street approves them.

h. Inlet grates or tops shall be cast with "Dump No Waste" in accordance with the Standard Details.

3.07.3 Area Drains and Ditch Inlets

a. The standard Area Drain and Ditch Inlet shall be as shown in Standard Details, unless an exception is approved by the District.

b. Area drains in rear or side yards shall not be sumped and shall be properly channelized. Ditch inlets shall be equipped with an 18-inch sump unless part of a flow through system approved in accordance with Section 3.05.5.

c. A main storm line shall not pass through an area drain or ditch inlet.

d. Area drains or ditch inlets may be located at the upper terminus of a main storm line, may connect to the main storm line at a manhole, or may connect to the main storm line through a tee with a lateral no longer than 10 feet.

3.08 Constructed Channel Design Standards

3.08.1 Application

This section shall apply to open channels constructed to convey runoff to the existing public storm and surface water conveyance system. This section does not apply to design or construction of new roadside ditches or work within existing stream channels.

Development which re-grades existing roadside ditches or constructs new roadside ditches shall meet Washington County Uniform Road Improvement Design Standards and applicable City regulations.

3.08.2 Channel Design

a. Channel Design shall be in accordance with Appendix A: Hydrology and Hydraulics.

b. Vegetation-lined channels shall be used whenever practicable as determined by the District or City. Rock-lined channels shall be used only where a vegetative lining will not provide adequate protection from erosion.

c. Constructed open channels shall be sized to pass the required flows without causing erosion and shall have side slopes no steeper than 2H:1V.

d. No protruding pipes, culverts or other structures, which reduce or hinder the flow characteristics of the channel, will be allowed. Channels and connections shall be designed to prevent scouring. All pipe connections shall match side slopes and incorporate a headwall.

3.09 Culvert Design Standards

3.09.1 Application

This section shall apply to culverts placed across streams and drainageways. Culverts pass water under or through obstructions.

For culverts with diameters of 36 inch or greater or for driveway culverts which are part of a roadside ditch system, the County or City is the jurisdictional District, and their road design standards shall apply.

Culverts within FEMA floodplains shall be reviewed and approved by the local FEMA designated authority.

For culverts which convey flows from or through water quality sensitive areas; a local representative of Oregon Department of Fish and Wildlife (ODFW) or other applicable state or federal agency shall be contacted to determine if fish passage is required and to identify site specific design criteria. All culverts shall be designed for fish passage in accordance with ODFW guidance for Fish Passage unless otherwise exempted by ODFW and the District/City.

3.09.2 Hydraulic Design

Culverts will be designed to safely pass the 25-year flow.

3.09.2.1 Headwater

a. For new culverts 18 inches in diameter or less, the maximum allowable design storm event headwater elevation (measured from the inlet invert) shall not exceed two times the pipe diameter or three times the pipe diameter with a seepage collar unless an exception is approved by the District / City.

b. For new culverts larger than 18 inches in diameter the maximum allowable design storm event headwater elevation (measured from the inlet invert) shall not exceed 1.5 times the pipe diameter unless an exception is approved by the District or the City.

c. The maximum headwater elevation of a design storm event for new culverts shall be at least one-foot lower than the road or

parking lot sub-grade.

3.09.2.2 Inlet

For culverts 18 inches in diameter and larger, the embankment around the culvert inlet shall be protected from erosion by lining around inlet with rock or other protection. The lining shall extend upstream from the culvert a minimum of five feet and shall be as high as the designed headwater elevation.

3.09.2.3 Outlets

For culverts 12 inches in diameter and larger, the receiving channel of the outlet shall be protected from erosion by rock lining, bio-engineering, or other District or City approved energy dissipater.

3.09.2.4 Inlet Control Analysis

The headwater depth for pipes under inlet control shall be determined using the nomographs contained in Appendix A: Hydrology and Hydraulics, the ODOT Hydraulics Manual, or a modeling methodology consistent with FHWA's HY8.

3.09.2.5 Outlet Control Analysis

The headwater depth for pipes under outlet control shall be determined using the nomographs contained in Appendix A: Hydrology and Hydraulics, the ODOT Hydraulics Manual, or a modeling methodology consistent with FHWA's HY8.

3.10 Outfall Design Standards

Outfalls shall be above the mean low water level unless an exception is approved by the District or City.

All outfalls shall be provided with a rock splash pad or other approved erosion control measure. Rock protection at outfalls shall be designed in accordance with the guidelines in Appendix A: Hydrology and Hydraulics, unless exceptions are approved by the District or City. Mechanisms, which reduce velocity prior to discharge from an outfall, are encouraged.

Engineered energy dissipaters, including but not limited to, stilling basins, drop pools, hydraulic jump basins, baffled aprons, and bucket aprons, are required for outfalls with velocity at design flow greater than 10-feet per second. These shall be designed using published references such as Hydraulic Design of Energy Dissipaters for Culverts and Channels published by the Federal Highway Administration of the United States

Department of Transportation, the ODOT Hydraulics Manual and others. Design reference shall be cited on the construction plan submittal.

3.11 Water Quantity Facility Design Standards

3.11.1 Mitigation Requirement for Quantity

Each new development must incorporate techniques for mitigating its impacts on the public stormwater system. The District shall determine which of the following techniques may be used to satisfy this mitigation requirement.

a. Construction of permanent on-site stormwater quantity detention facilities designed in accordance with Appendix B: Water Quality & Quantity Facility Design; or

b. Enlargement or improvement of the downstream conveyance system in accordance with Appendix B: Water Quality & Quantity Facility Design; or

c. Payment of a Storm and Surface Water Management System Development Charge (SWM SDC), as provided in CWS Ordinance 28, which includes a water quantity component to meet these requirements.

3.11.2 Criteria for Requiring On-Site Detention

a. If the on-site facility is required to be constructed, the development shall be eligible for a credit against SWM SDC fees, as provided in District Ordinance and Rules.

b. On-site facilities shall be constructed when any of the following conditions exist:

1) There is an identified downstream deficiency, and detention rather than conveyance system enlargement is determined to be the more effective solution.

2) There is an identified regional detention site within the boundary of the development.

3) There is a site within the boundary of the development, which would qualify as a regional detention site under criteria or capital plan adopted by the District.

4) Water quantity facilities are required by District adopted watershed management plans or adopted subbasin master plans.

3.11.3 Water Quantity Facility Design Criteria

a. All water quantity facilities shall be designed in accordance with District guidance documents and be consistent with Appendix B: Water Quality and Quantity Facility Design.

b. When required, stormwater quantity on-site detention facilities shall be designed to capture runoff so the post-development runoff rates from the site do not exceed the pre-development runoff rates from the site, based on a 2 through 25-year, 24-hour return storm. Specifically, the 2, 10, and 25-year post development runoff rates will not exceed their respective 2, 10, and 25-year pre-development runoff rates; unless other criteria are identified in an adopted watershed management plan or subbasin master plan.

c. When required because of an identified downstream deficiency, stormwater quantity on-site detention facilities shall be designed such that the peak runoff rates will not exceed pre-development rates for the specific range of storms which cause the downstream deficiency.

d. Construction of on-site detention shall not be allowed as an option if such a detention facility would have an adverse effect upon receiving waters in the basin or subbasin in the event of flooding, or would increase the likelihood or severity of flooding problems downstream of the site.

3.11.4 Water Quantity Facility Design Standards

All water quantity facilities shall be designed in accordance with Appendix B: Water Quality and Quantity Facility Design.

3.12 Water Quality Facility Design Standards

a. Purpose

Owners of new development and other activities which create new impervious surfaces or increase the amount of stormwater runoff or pollution leaving the site are required to construct or fund permanent water quality facilities to reduce contaminants entering the storm and surface water system.

b. Criteria for Requiring Construction of a Water Quality Facility

1) A water quality facility shall be constructed on-site unless, in the judgment of the District or City, any of the following conditions exist:

a) The site topography or soils makes it impractical, or ineffective to construct an on-site facility;

b) The site is small, and the loss of area for the on-site facility would preclude the effective development.

c) There is a more efficient and effective regional site within the subbasin that was designed to incorporate the development or is in the near vicinity with the capacity to treat the site.

d) The development is for the construction of one or two family (duplex) dwellings on an existing lot of record.

2) If construction of an on-site facility is not required, the owner of the development shall pay a System Development Charge in accordance with District Rules and Regulations. The System Development Charge shall be calculated on an equivalent basis of constructing the minimum Standard Water Quality Swale.

c. Design Standards

1) The stormwater quality facilities shall be designed to remove 65 percent of the total phosphorous from the runoff from 100 percent of the newly constructed impervious surfaces.

2) The phosphorous removal efficiency specifies only the design requirements and is not intended as a basis for performance evaluation or compliance determination of the stormwater quality control facility installed or constructed pursuant to this Chapter.

3) If an onsite water quality facility cannot be constructed to treat the runoff from the development's impervious surface, then with District or City approval, an on- or off-site water quality facility may be designed to treat runoff from an equivalent area of adjacent untreated impervious surfaces.

4) Facilities shall be designed such that flow from the development is treated off-line from the storm conveyance system and reconnected to upstream flows following treatment. If an off-line facility is not feasible, additional capacity may be required for upstream flow.

5) Discharges to sensitive areas shall maintain the hydroperiod and flows of pre-development site conditions to the extent necessary to protect the characteristic functions of the sensitive area. Conversely, discharge of flows that may be critical to downstream water quality sensitive areas into other catchments will not be permitted unless addressed in the applicant's Service Provider Letter.

6) The stormwater quality facilities shall be designed for a dry weather storm event totaling 0.36 inches of precipitation falling in 4 hours with an average storm return period of 96 hours.

7) Water quality facilities shall be constructed as part of the subdivision public improvements.

8) Other design options for meeting this section may be considered by the District for approval.

9) All water quality facilities shall be designed in accordance with Appendix B: Water Quality and Quantity Facility Design.

d. Impervious Area Used In Design

1) For single family and duplex residential subdivisions, stormwater quality facilities shall be sized for all impervious area created by the subdivision and for all existing impervious area proposed to remain on site, including all existing and proposed residences on individual lots at the rate of 2640-square feet of impervious surface area per dwelling unit.

2) For all developments other than single family and duplex, including rowhouses and condominiums, the sizing of stormwater quality facilities shall be based on the impervious area created by the development and for all existing impervious area proposed to remain on site, including structures and all roads and impervious areas. Impervious surfaces shall be determined based upon building permits, construction plans, or other appropriate methods of measurement deemed reliable by District and/or City.

3) The District encourages design initiatives that reduce effective impervious area. In developments other than single family and duplex, a decrease in the size of the water quality facility may be possible.

3.13 Flood Management Design Standards

a. Purpose

The purpose of these standards is to reduce the risk of flooding, prevent or reduce the risk to human life and property, and maintain the functions and values of floodplains, such as allowing for the storage and conveyance of stream flows through existing and natural flood conveyance systems.

b. Flood Management Areas Defined

Flood management areas shall include, but are not limited to, the following:

1) Land identified within the 100 year floodplain and floodway as shown on the Federal Emergency Management Agency Flood Insurance maps

2) Land identified in updated flood studies or any other authoritative data documenting flood elevations as approved by the District or City/County

Applicants shall use the most recent and technically accurate watershed model information available from the District, or other updated data as approved by the District, to determine flood areas.

Notwithstanding any other provision of these rules, the area within the town center of the City of Tualatin, more particularly described in Attachment 1, which is by this reference incorporated herein, is not subject to the Flood Management Design Standards set out in Section 3.13 of these rules.

c. Design Criteria

The standards that apply to the flood management areas apply in addition to local, state, and federal restrictions governing floodplains and flood hazard areas.

1) All fill placed in a floodplain shall be balanced with an equal amount of soil material removal and shall not decrease floodplain storage capacity at any stage of a flood (2, 25, or 100-yr event). No net fill in any floodplain is allowed except when all of the following conditions are met:

(a) when an area has received special protection from floodplain improvement projects which either lower the floodplain, or otherwise protect affected properties;

(b) where the exceptions comply with adopted master plans, watershed management plans, or subbasin plans, if any; and

(c) When all required permits and approvals have been obtained in

compliance with FEMA rules and other local, state, and federal laws regarding fill in floodplains.

2) Large areas may not be excavated in order to gain a small amount of fill in a floodplain. Excavation areas shall not exceed the fill areas by more than 50 percent of the square footage, unless approved by the District.

3) Any excavation dug below the winter "low water" elevation shall not count toward compensating for fill since these areas would be full of water in the winter and not available to hold storm water following a rain. Winter "low water" elevation is defined as the water surface elevation during the winter when it has not rained for at least three days, and the flows resulting from storms have receded. This elevation may be determined from records, studies, or field observation. Any fill placed above the 100-year floodplain will not count towards the fill volume.

4) The excavated area must be designed to drain if it is an area identified to be dry in the summer, e.g., if it is used for a park or mowed in the summer. Excavated areas identified to remain wet in the summer, such as a constructed wetland, shall be designed not to drain. For areas that are to drain, the lowest elevation shall be at least 6 inches above the winter "low water" elevation, and sloped to drain. One percent slopes will be allowed in areas less than 1000 sq. ft.

5) Excavation to balance a fill shall be located on the same parcel as the fill unless it is not reasonable or practicable to do so. In such cases, the excavation shall be in the same drainage basin, within points of constriction on the conveyance system, if any, as near as practical to the fill site, and shall be constructed as a part of the same development project.

6) Short term parking (motor vehicles remain parked for less than 18 hours per day) in the floodplain may be located at an elevation of no more than one foot below the ten year floodplain so long as the parking facilities do not occur in a Water Quality Sensitive Area or vegetated corridor. Long term parking (motor vehicles remain parked for greater than 18 hours without being moved) in the floodplain may be located at an elevation of no more than one foot below the 100 year floodplain so long as the parking facilities do not occur in a Water Quality Sensitive Area or Vegetated Corridor.

7) Temporary fills permitted during construction shall be removed upon completion of construction prior to the close of the in-stream work window as defined by Oregon Department of Fish and Wildlife or other local, state or federal authority.

8) Excavation and fill required for the construction of detention facilities or other facilities, such as levees, shall be specifically designed to reduce or mitigate flood impacts. Levees shall not be used to create vacant buildable land.

9) Excavation and fill required to restore or enhance floodplains, riparian areas, wetlands, uplands, and streams, including but not limited to the planting of vegetation and daylighting existing storm pipes, shall be permitted as long as the design complies with applicable federal, state and local standards.

10) The floodplain may not be modified to increase water velocities such that stream bank erosion will be increased, unless the stream banks are protected to prevent the increased erosion.

11) Uncontained areas of hazardous materials are prohibited within flood management areas.

12) Existing nonconforming uses are allowed to continue in the flood management area. Existing nonconforming uses may be modified with approval from the District or City/County.

13) Any proposed work within or modification to a floodway must be certified by an Oregon Registered Professional Engineer as to how it conforms to these standards and all other local, state, and FEMA regulations.

14) For streams, creeks, rivers and other watercourses where the floodway has not been identified, the entire floodplain shall be treated as a floodway unless a study has been prepared by an Oregon Registered Professional Engineer and approved by the District/City/County to define the floodway limits for a stream section.

Chapter 4

STANDARD DESIGN SPECIFICATIONS FOR PUBLIC SANITARY SEWER

Section 4.01 Application and Interpretation of Chapter

4.02 General Conditions

4.03 Sewage Flow Determination

4.04 Engineering

4.05 Surveying

4.06 Railroad Crossings

Chapter 4

STANDARD DESIGN SPECIFICATIONS FOR PUBLIC SANITARY SEWER

4.01 Application and Interpretation of Chapter

The provisions of this chapter shall apply to all public sanitary sewer systems within District and City jurisdiction. Interpretations of such provisions and their application in specific circumstances shall be made by the District and City. Any City operating a local program may adopt stricter design specifications within its jurisdiction than the specifications stated in this chapter.

4.02 General Conditions

The District may apply conditions prior to the issuance of a sanitary sewer connection permit(s) for development.

The conditions may include, but are not limited to, the dedication of sanitary sewer system easements, the construction of public sanitary sewer system facilities to serve the development or use, the extension of public sanitary sewer system facilities and/or dedication of easements to the most distant parcel boundary to facilitate future extension in order to allow service to upstream properties, and the approval of an adjoining City or County as may be required by intergovernmental agreement between the District and City or County.

4.03 Sewage Flow Determination

When required by the District or City, the Engineer shall submit to the District or City the design calculations for sizing the proposed sanitary sewer system. The proposed sanitary sewer system shall be sized to carry the ultimate flow for that basin in accordance with the current District adopted master plan and any applicable amendments and updates.

4.03.1 Drainage Basin

A reference map showing the drainage basin in which the project is located may be required. If the map is required, the map shall show the major basin that is consistent with the current District adopted master plan, and any applicable amendments and updates.

4.03.2 Population Density

The population density figures shall be from the most recent information obtained for use by the zoning or planning department of the applicable public agency. If these figures vary from those of the applicable master plan estimates, this difference must be noted in the design calculations.

4.03.3 Flow Variations and Peaking Factor

Accepted flow design practice must be employed. The current adopted Master Plan Update, and any applicable amendments and updates, shall be used for approved flow parameters and peaking factor unless the engineer has more current information particular to the basin in which the project is located, and this information is approved by the District and City.

4.03.4 Infiltration and Inflow

Infiltration and inflow must be represented in flow calculations in the design of the sanitary system. The infiltration and inflow figures shall be from the current adopted Master Plan, or any applicable amendments or updates.

4.03.5 Sewage Flows

The Manning's coefficient value ("n") to be used in calculating sewage flows is 0.013. Sewers of sizes which are obviously larger than are necessary for satisfactory carrying capacity, but which are specified in order to meet grade requirements, are not allowed. Surcharging shall not be designed into the piping system.

4.04 Engineering

4.04.1 General Provisions

a. All sanitary sewers shall be designed and constructed to conform to the rules of the Oregon Department of Environmental Quality, and rules, regulations and specifications for sanitary sewer systems construction of Clean Water Services, and any District interpretations thereof.

b. Except as otherwise provided, the extension of the public sanitary sewer systems to serve any parcel or tract of land shall be done by and at the expense of the property owner. The District and City reserve the statutory right to perform the work or cause it to be performed and bill the owner for the cost or to pursue special assessment proceedings as otherwise provided by District and City ordinance or permit conditions.

c. All 6-inch and larger sanitary sewer serving private developments shall conform to the standard specifications for public sanitary sewer as set forth in this Resolution and Order unless otherwise approved by the District. Sanitary pipeline that serves more than one property shall be a public system unless otherwise approved by the District or City.

4.04.2 Extension of Public Sanitary System

a. The District may require the extension of the public system, and deny sewer service through the extension of a private lateral unless all of the following conditions are met:

1) The side sewer must be less than 50 feet in length measured from the property line to the public sewer line, unless approved by the District, and

2) The side sewer shall have no bends between the property line and the public sewer line, and

3) The lateral may not cross any other property, except in a public street right-of-way or public sewer easement, and

4) The connection must be with a 90 degree tee at the public sewer line, or with a 60 degree or 90 degree tee at a public sewer manhole, and

5) Must meet all other physical requirements of a lateral as defined in District rules.

4.04.3 Pipe Design

No public sanitary sewer shall be less than 8-inches in diameter unless otherwise approved by the District. Six-inch sanitary sewer may be approved by the District or City if the line is no more than 250 feet long and is located at the end of a system with no requirement to be extended. Side sewers shall have a minimum of 4-inch inside diameter.

a. Location. Sanitary sewers, whenever possible, shall be installed within five feet of the center line of the public right-of-way or on the centerline of easements unless otherwise approved by the District or City. Sewers shall be installed no closer than five feet to an easement side line or 10 feet to the edge of a public right-of-way. The District and City may require maintenance access easements.

b. Alignment. Sanitary sewer lines shall be laid on a straight alignment and uniform grade between manholes.

c. Grade.

1) All sanitary sewers shall be laid on a grade which will produce a minimum velocity of two feet per second when flowing full or half-full. The minimum grades for various sizes of pipe are listed below:

Inside Pipe Diameter (Inches)	Grade (Feet per 100 Feet)
6	0.60
8	0.40
10	0.28
12	0.22
15	0.15
18	0.12
21	0.10
24	0.08
27	0.07
30	0.06

d. Steep Slopes. Sanitary sewers on slopes in excess of 20 percent shall be secured through the use of concrete anchor walls. Spacing for anchors shall be as follows:

Grade (%)	Minimum Anchor Spacing (Center to Center)
20-34	35 Feet
35-50	25 Feet
51 +	15 Feet or Concrete Encasement

e. Pipe Cover:

Minimum pipe cover shall be in compliance with this section unless an exception is approved by the District, City, or County.

In paved areas or areas anticipated to receive vehicular traffic, pipe cover shall be measured from the top of the paved surface (finish grade) to the upper surface of the pipe barrel. The pipe bell shall not intrude into the subbase. In areas without pavement or vehicular traffic, pipe cover shall be measured from finish grade to the upper surface of the pipe barrel.

Minimum cover requirements are contained in the following table:

Type of Pipe	Cover-Paved Areas(in)	Cover-Unpaved areas (in)
Non-reinforced Pipe	48	36
RCP Class III	30	18
RCP Class IV	24	12
RCP Class V	18	6
AWWA C900	24	12
AWWA C905	24	12
Ductile Iron	18	6

f. Sanitary Sewer in Vicinity of Water Supplies. No sanitary sewer shall be less than 10 feet from any well, spring, or other source of domestic water supply. All sanitary sewers which are located within 50 feet from any such source of domestic water supply shall be constructed of ductile iron water pipe with watertight joints, C-900/905 PVC (Polyvinyl Chloride) or other District approved pipe. Sanitary sewers and domestic water lines shall not be laid in the same trench. Parallel water and sanitary sewer lines, wherever possible, shall be at least 10 feet apart horizontally when there is less than 18-inches of vertical clearance between water and sanitary sewer. When physical conditions render this spacing impossible or impractical, ductile iron pipe with watertight joints, concrete encasement, C-900/905 PVC, or pipe approved by District shall be required. Wherever it is necessary for sanitary sewer and water lines to cross each other, the crossing should be at an angle of approximately 90 degrees. The sanitary sewer shall be located 18 inches or more below the water line or be constructed of District approved pipe for a distance of nine feet on both sides of the water line.

g. The minimum separation distance between sanitary sewer and utilities other than waterlines shall be 5 feet (clear). If vertical separation between utilities is greater than 3 feet, additional horizontal spacing may be required to allow for maintenance access.

4.04.4 Manhole Design

a. Manholes shall be provided at least every 500 feet, at every change in alignment, and at every grade change unless otherwise approved by the District or City. A manhole shall be located at the upstream end of the pipe except as allowed in Section 4.04.5. Manholes shall not be closer than five feet to a curb line and not in a wheel path.

b. All manholes shall be a minimum of 48-inches in diameter. All manholes shall have a minimum 12-inch ledge in the base.

c. Submittal of manhole designs are required on all projects where sewers are 24-inches or larger in diameter.

d. Elevation of the existing ledge, location of steps, and elevations of existing inlets and outlets are required on the plan submittals.

e. Side sewers are allowed to be connected directly into a manhole providing that the manhole is properly channelized. No more than three side sewers are allowed to be connected to a manhole unless otherwise approved by the District or City. If the vertical distance from the side sewer invert to the lowest pipe invert exceeds 2 feet, an inside drop may be required.

f. Manholes constructed on lines with 12-inch or smaller pipe shall have a minimum 0.2 foot fall through the manhole unless otherwise approved by the District or City.

4.04.5 Cleanouts

a. Cleanouts shall be allowed only on pipelines where the sewer line has no possibility for future extension and the distance between the cleanout and a manhole is a maximum of 150 feet. The standpipe shall be the same size as the pipeline up to a maximum of 8-inches.

b. Locations of permanent cleanouts shall be approved by the District or City. Permanent cleanouts shall not be installed within a paved street or driveway.

c. Temporary cleanouts may be installed within the right-of-way at the end of a stub street where the street is expected to be extended in the future and the design of the sewer system does not warrant that a manhole be constructed at this location. The maximum distance of a main line extension without a temporary cleanout is 15 feet. The District or City will make the determination when and where temporary cleanouts are allowed. When the sewer is extended, the temporary cleanout shall be removed.

4.05 Surveying

The Engineer/Surveyor shall be responsible for establishing the location of the sanitary sewer system by means of construction stakes offset along the center lines prior to commencement of construction. Moving upstream, there shall be a construction stake placed within 25 feet of each manhole, and at no more than 100-foot intervals along the mainline. Each lateral location shall be staked.

4.06 Railroad Crossings

Crossing of railroad rights-of-way shall be done in a manner which conforms to the requirements of the railroad having jurisdiction. If any bonds and/or certificates of insurance protection are required, they shall be furnished by the contractor or owner to the railroad company concerned. The District or City shall be named as an additional insured.

Actual permits or easements for such crossings shall be obtained by the owner and all terms for such permits or easements shall be met by the owner and contractor.

Chapter 5

GENERAL CONSTRUCTION SPECIFICATIONS FOR SANITARY SEWER AND STORM SYSTEMS

Section 5.01 General Provisions

5.02 Trench Excavation and Backfill

5.03 Pavement Restoration

5.04 Bores

Chapter 5

GENERAL CONSTRUCTION SPECIFICATIONS FOR SANITARY SEWER AND STORM SYSTEMS

5.01 General Provisions

The specifications contained in this Chapter, together with Oregon Department of Environmental Quality and U.S. Environmental Protection Agency standards and any other applicable requirements of the District and City, shall govern the character and quality of material, equipment, installation and construction procedures for gravity flow portions of public sanitary sewer and storm systems. Each city or county which operates a Local Program may adopt regulations stricter than specified in this chapter for their Local Program.

5.01.1 Scheduling

a. Sequence of Operations. The Contractor shall plan and execute construction work to cause a minimum of interference to the operation of existing District and City facilities. It may be necessary to do certain parts of the construction work outside normal working hours in order to avoid undesirable conditions, and it shall be the obligation of the Contractor to make this change to the work schedule. This scheduling, however, is subject to the District or City approval, and does not relieve the Contractor from making its work available for inspection.

Connections between existing work and new work shall not be made until necessary inspections and tests have been completed on the new work and it is found to conform in all respects to the requirements of the plans and specifications, unless otherwise approved by the District or City.

b. Progress of Construction. Construction shall proceed in a systematic manner that will result in minimum inconvenience to the public. Construction staking for the work being performed shall be completed prior to the start of excavation. The Contractor shall limit its operations to a small length of work area per crew. At no time shall the trenching equipment be farther than 300 feet ahead of the pipe laying crews, unless advance written permission is given by the District or City. The trench shall be backfilled so that no section of trench is left open longer than 24 hours. Trenches located in a right-of-way shall be completely backfilled before the Contractor leaves the site for the day unless the trench is adequately secured with steel plates.

Cleanup of all construction debris, excess excavation, excess materials, and complete restoration of all fences, mail boxes, ditches, culverts, signposts, and similar items shall be completed immediately following the final backfilling of the trench.

Any area disturbed by the Contractor's operations inside dedicated easements shall be restored to its original condition. Any area that is disturbed by the Contractor's operations outside the dedicated easement shall be restored to the property owner's satisfaction.

5.01.2 Preservation, Restoration, and Cleanup

a. Site Restoration and Cleanup. The Contractor shall keep the premises clean and orderly at all times during the work and leave the project free of rubbish or excess materials of any kind upon completion of the work. During construction, the Contractor shall stockpile the excavated trench materials so as to do the least damage to adjacent lawns, grassed areas, gardens, shrubbery, trees, or fences, regardless of the ownership of these areas. All excavated materials shall be removed from these areas, and these surfaces shall be left in a condition equivalent to their original condition and free from rock, gravel, boulders, or other foreign material. The Contractor shall replace topsoil areas over all trenches with a minimum finished depth of 12 inches of topsoil. All existing drainage ditches and culverts shall be reopened and graded, and original drainage restored. All damaged irrigation and house drainage pipe, drain tiles, sanitary sewer or storm laterals, and culverts shall be repaired expeditiously. The finished surface shall conform to the original surface and shall be free-draining, free from holes, rough spots, or other surface features detrimental to a seeded area.

b. Preservation of Irrigation and Drainage Ditches. Following the backfill of the trenches, the Contractor shall restore all public and private irrigation and storm drain ditches that have been destroyed, damaged, or otherwise modified during construction to the condition equal to or better than the condition of the ditch before construction, and as approved by the District or City. Ditches shall be built in their original locations unless otherwise redesigned as part of the project.

c. Stream and Creek Crossings. The Contractor shall comply with all provisions of the permits required by the Oregon Division of State Lands, the U.S. Army Corps of Engineers, Washington County, the District and any other agencies having jurisdiction.

5.01.3 Interferences and Obstructions

a. General. Various obstructions may be encountered during the course of the work. Maps and information regarding underground utilities shall be obtained from the utility owning and operating such utilities, but the location of such utilities is not guaranteed. A minimum of 48 hours notice shall be given to all utility offices that may be affected by the construction operation. The contractor shall comply with the Oregon "locate law" ORS 757.541 to ORS 757.571. If services of any utility are interrupted due to the construction operation, the proper authority shall be notified immediately.

b. Protection. The Contractor shall exercise all due care in protecting property along the route of the improvement. This protection shall include, but not be limited to, trees, yard, fences, drainage lines, mail boxes, driveways, shrubs and lawns. If any of the above has been disturbed, they shall be restored to as near their original condition as possible.

5.01.4 Permanent Survey Monuments

The Contractor shall not disturb permanent survey monuments, property corners, stakes or benchmarks without prior written consent of the appropriate county surveyor. It shall be the responsibility of the Contractor to protect such survey markers. Survey markers which are disturbed or lost shall be replaced by a registered land surveyor. When a change is made in the finished elevation of the pavement, or any roadway in which a permanent survey monument is located, the monument cover shall be adjusted to the new grade.

5.02 Trench Excavation and Backfill

5.02.1 Definitions

a. Trench Excavation. Trench excavation is the removal of all material encountered in the trench to the depths shown on the plans or as directed by the District.

b. Trench Foundation. The bottom of the trench on which the pipe bedding is to lie. The trench foundation provides the support for the pipe.

c. Pipe Bedding. The furnishing and placing of specified materials on the trench foundation to uniformly support the barrel of the pipe from the trench foundation to the springline of the pipe.

d. Pipe Zone. The full width of the trench from six inches above the top outside surface of the barrel of the pipe to the springline of the pipe.

e. Spring Line. Halfway up the sides of the pipe when it has been laid on the pipe bedding.

f. Trench Backfill. The furnishing, placing, and compacting of material in the trench between the top of the pipe zone material and the bottom of the pavement base rock, ground surface, or surface materials as directed.

g. Native Material. Earth, gravel, rock, or other common material free from humus, organic matter, vegetative matter, frozen material, clods, sticks, and debris, isolated points or areas, or larger stones which would cause fracture or denting of the structure or subject it to undue stress.

5.02.2 Materials

a. Trench Foundation. Trench foundation shall be native material in all areas except where ground water or other conditions exist and, in the opinion of the District or City, the native material is such that it cannot support the bedding and pipe. In those conditions, geotextile fabrics approved by the District shall be installed or the unsuitable material shall be removed as required and the trench backfilled with approved crushed aggregate.

b. Pipe Bedding. Pipe bedding material shall be clean crushed rock with a maximum size of 3/4-inch, uniformly graded from coarse to fine or as approved by District or City.

c. Pipe Zone. The pipe zone material shall consist of approved bedding material except when using reinforced concrete pipe, ductile iron pipe or C-900 pipe, where native material, i.e. earth, gravel, rock, or combination thereof may be used. All pipe zone materials shall be subject to the District or City approval.

d. Trench Backfill. Above the pipe zone will be divided into the following classifications:

1. Class A Backfill. Class A backfill shall be native or common material, which in the opinion of the District meets the desired characteristics required for the specific surface loading.

2. Class B Backfill. Class B backfill shall be 3/4"-0" granular Grade A crushed rock material, unless otherwise approved.

e. Geotextile Fabric. The geotextile fabric used in trench stabilization shall be lightweight, nonwoven filter fabric, such as Mirafi 140N or equal, for unstable soil conditions or high-strength woven filter fabric (Mirafi 600x or equal) for highly unstable soil conditions. The District or City shall select the appropriate fabric based on the soil conditions.

5.02.3 Construction

a. Excavation

1. Clearing the Right-of-Way. Clearing shall be completed prior to the start of trenching. Brush shall be cut as near to the surface of the ground as practicable and removed to a disposal site approved by the District. The Contractor shall observe all federal, state, and local laws relating to fire permits, burning materials and other requirements. Under no condition shall brush be covered by excavated materials prior to being cleared and removed.

   Excavated material shall be placed at locations and in such a manner that it does not create a hazard to pedestrian or vehicular traffic, nor interfere with the function of existing drainage facilities.

2. Open Trench Limit. The length of the open trench shall always be kept to a minimum. The District or City shall determine the amount of open trench allowed based upon work conditions of the area. In normal cases, the open trench length shall not exceed 300 feet. Related trench construction such as pavement, road gravel, concrete restoration, etc., shall be completed within 800 feet of the open trench limit unless otherwise authorized.

3. Trench Width. The trench width at the surface of the ground shall be kept to a minimum necessary to install the pipe in a safe manner. In all cases, trenches must be of sufficient width to allow for shoring, proper joining of the pipe, and backfilling of material along the sides of the pipe. The minimum trench width in the pipe zone must provide a clear working space of six inches outside the maximum outside diameter of the pipe.

   No maximum width of trench at the top of the pipe is specified in this Chapter. When required by design, the maximum trench width shall be shown on the plans. If the maximum width shown is exceeded by the Contractor without written authorization, the Contractor will be required to provide pipe of a higher strength designation, a higher class of bedding, or both, as approved by the

District or City. Excavation for manholes and other structures shall be wide enough to provide a minimum of 12-inches between the structure's surface and the sides of the excavation.

b. Installation

1. Shoring. The Contractor shall provide all materials, labor, and equipment necessary to adequately shore trenches to protect the work, existing property, utilities, pavement, etc., and to provide safe working conditions in compliance with all OSHA requirements. That portion of cribbing or sheeting extending below the springline of rigid pipe or below the crown elevation of flexible pipe shall be left in place unless satisfactory means of consolidating bedding or side support, disturbed by cribbing or sheeting removal, can be demonstrated. If a movable box is used in lieu of cribbing or sheeting and the bottom cannot be kept above the springline of the crown elevation of flexible pipe, the bedding or side support shall be carefully reconsolidated behind the movable box prior to placing backfill. The use of horizontal strutting below the barrel of pipe or the use of pipe as support for trench bracing will not be permitted.

2. Dewatering. The Contractor shall provide and maintain ample means and devices with which to promptly remove and dispose of all water entering the excavation during the time the trench is being prepared for the pipe, during the laying of the pipe, and until the backfill at the pipe zone has been completed. Groundwater shall be controlled such that softening of the bottom of excavations or formation of "quick" conditions or "boils" during excavation shall be prevented. Dewatering systems shall be designed to prevent removal of the natural soils, and maintained in such a manner that the groundwater level outside the excavation is not reduced to the extent that adjacent structures or property would be damaged or endangered.

3. Trench Foundation. When, in the judgment of the District or City, the existing material in the bottom of the trench is unsuitable for supporting the pipe, the Contractor shall install geotextile fabrics or excavate below the pipe, as directed. The Contractor shall place trench foundation material to the bottom of the pipe bedding. The trench foundation material shall be placed over the full width of the trench and compacted in layers not exceeding six inches deep to the required grade.

4. Pipe Bedding. Pipe bedding consists of leveling the bottom of the trench on the top of the foundation material and placing bedding material to the horizontal centerline of the pipe, unless otherwise specified. The Contractor shall spread the bedding smoothly to the proper grade so that the pipe is uniformly supported along the barrel, and excavate bell holes at each joint to permit proper assembly and inspection of the entire joint. Bedding under the pipe shall provide a firm, unyielding support along the entire pipe length. Particular attention shall be given to the area from the flow line to the horizontal centerline of the pipe or top of bedding to ensure that firm support is obtained to prevent any lateral movement of the pipe during the final backfilling of the pipe zone. Pipe bedding shall be placed the full width of the trench.

5. Grade. The Contractor shall excavate the trench a minimum of 4-inches plus the pipe wall thickness below the grade shown for pipe smaller than 18-inches and six inches for pipe 18-inches and larger, or as established by the District. The subgrade upon which the bedding is to be placed shall be firm, undisturbed, and true to grade. If the trench is over-excavated, the Contractor shall restore to grade with material of the type specified for pipe bedding and place the material over the full width of the trench.

6. Backfill. Backfill shall not be placed in the trench in such a way as to permit free-fall of the material until a minimum of two feet of cover is provided over the top of the pipe. Under no circumstances shall the Contractor allow sharp, heavy materials to drop directly onto the pipe or pipe zone material around the pipe. If the required compaction density has not been obtained, the Contractor shall remove the backfill from the trench and recompact. This process shall be repeated until the Contractor has established a procedure that will provide the required field density. The Contractor will then be permitted to proceed with backfilling and compact the remainder of the pipeline under the approved procedure.

   With approval of the District or City, the Contractor may substitute water settling as an alternate compaction method. Water settling shall be done only with approved jetting equipment and methods. Water settlement shall not relieve the Contractor of the responsibility for compaction of trench backfill as specified in this Chapter for standard compaction methods. The location and extent of trench water settling will be determined by the District or City. The Contractor shall backfill the trench as specified to a point level with or slightly above the required grade to allow for settlement.

After all structures are completed and all subsurface utilities have been restored to their original condition, the Contractor shall place water in the trench section in such quantities and in such a manner that all portions of the backfill for the entire trench depth become saturated. The Contractor shall determine the procedures and provide the quantity of water required in every case to effect complete water settlement of the backfilled materials. Under no circumstances will the jetting pipe be inserted closer than two feet above the top of the pipeline. Any subsequent settlement of the trench during the warranty period shall be considered to be the result of improper water settlement or compaction and shall be promptly corrected.

The granular backfill within four feet of finished grade shall be compacted to not less than 95 percent relative compaction as determined by Method A of AASHTO T99. Backfill more than four feet from finished grade shall be compacted to not less than 90 percent relative compaction. Tests to determine compliance with the compaction requirements shall be provided as required by the District or City.

7. Impervious Zone. When installing sanitary sewers within a stream corridor or wetland area, an impervious zone of clay or other approved material shall be installed to prevent draining the wetland. The impervious zone shall be two feet thick parallel to the pipe, extending from the bottom to the top of the pipe zone, and extending one foot beyond each side of the trench wall. This zone shall be compacted to 90 percent relative compaction as determined by Method A of AASHTO T99.

5.03 Pavement Restoration

5.03.1 General

The stricter of the requirements of this section or the standards of the jurisdiction having authority over the road being repaired shall be followed.

5.03.2 Materials

a. Crushed Rock. The following rock specifications shall be required unless modified by the local jurisdiction.

1. Base Course Rock. Rock for the base course of the street shall be 1-1/2-inches and shall conform to the applicable portions of the standard specifications for highway construction of the Oregon

State Highway Division for course aggregate base material.

2. Leveling Course Rock. Rock for leveling course shall be 3/4-inch minus, conforming to the applicable portions of the Standard Specifications for Highway Construction of the Oregon State Highway Division for leveling course.

b. Asphalt Concrete

1. Prime Coat. Materials for prime coat shall be emulsified asphalt-type CMS-2 or approved equal.

2. Tack Coat. Materials for tack coat shall be emulsified asphalt-type RS-1, CRS-1, or approved equal.

3. Base Course. When more than two inches of asphalt concrete is required, the asphalt concrete shall be placed in two or more courses. The base course shall be Class B asphaltic concrete mix conforming to the Standard Specifications for Highway Construction of the Oregon State Highway Division.

4. Surface Course. Asphaltic concrete for the surface course shall be Class C mix conforming to the Standard Specification of the Oregon State Highway Division. All surface course mix design is subject to final approval by the District or City.

5.03.3 Workmanship

a. Subgrade.
The Contractor shall:

1. Bring the trench to a smooth, even grade at the correct distance below the top of the existing pavement surface, allowing for base rock, leveling rock and asphalt concrete.

2. Trim existing pavement so that the trench width plus 12-inches of asphalt is removed creating a "t" cut section as shown in standard drawing 285.

3. Remove any pavement which has been damaged or which is broken and unsound and provide a smooth, sound edge for joining the new pavement.

4. Compact the top four feet of pavement subgrade to 95 percent relative density, ASTM D2049.

5. And accomplish supplementary compaction where required with approved mechanical vibrating or power tampers.

b. Base Aggregate Course and Leveling Course. The Contractor shall obtain approval of the subgrade by the District or City prior to placing any base course material on the subgrade. Workmanship in manufacturing, placing, compacting, and maintaining base, or leveling course, shall be in conformance with the requirements of the Standard Specifications for Highway Construction of the Oregon State Highway Division, except as modified in this Chapter.

c. Tack Coat. After the leveling course has been compacted, the Contractor shall apply the tack coat to the edges if the existing pavement and manhole frames at 0.06 to 0.12 gallons per square yard. The surface upon which the tack coat is applied shall be dry and clean of dirt, dust, and other matter inhibiting asphalt adherence.

d. Asphaltic Concrete.

1. Weather Conditions. Asphaltic concrete shall not be placed when the atmospheric temperature is lower than 40 degrees F., during rainfall, or when the surface is frozen or wet. Exceptions will be permitted only in special cases and only with prior written approval of the District or City.

2. Base Course. If a base course of asphaltic concrete is required, the Contractor shall place the asphaltic concrete on the prepared subgrade over the trench to a depth of two inches. The Contractor shall spread and level the asphaltic concrete and compact it by rolling or by use of hand tampers where rolling is impossible. Power rollers shall be capable of providing compression of 250 pounds per inch of width.

3. Surface Course. The Contractor shall place the asphaltic concrete to the required depth; spread and level the asphaltic concrete with hand tools or by use of a mechanical spreader, depending upon the area to be paved; bring the asphaltic concrete to the proper grade and compact by rolling or the use of hand tampers where rolling is impossible; roll with power rollers capable of providing compression of 250 pounds per inch of width; and begin the rolling from the outside edge of the replacement progressing toward the existing surfacing, lapping the existing surface at least one-half the width of the roller. If existing surfacing bounds both edges of the replacement, the Contractor shall begin rolling at the edges of the

Propcode.dbf

Prop_code	Description
003	Misc, operating assessed
014	Misc, residential zone, historical
015	Misc, residential zone, open space
024	Misc, commercial zone, historical
025	Misc, commercial zone, open space
045	Misc, tract land, open space
081	Misc, recreation, improved, SHS
085	Misc, recreation, open space
087	Misc, recreation, timeshare
092	Misc, potential development, condominium
100	Residential land, vacant
101	Residential land, improved
102	Residential condominium
121	Residential land, commercial zone, improved
131	Rural homesite (EFU zone within water district)
140	Residential land, unzoned farm land, vacant
141	Residential land, unzoned farm land, improved
151	Res, EFU, Imp in a water dist
160	Residential land, misc, vacant
161	Residential land, misc, improved
170	Lakefront land, vacant
171	Lakefront land, improved
181	Residential land, multiple special assignments, improved
190	Residential land, potential development, vacant
191	Residential land, potential development, improved
192	Residential land, potential development, condominium
200	Commercial land, vacant
201	Commercial land, improved
221	Commercial land, commercial zone, improved
231	Commercial land, industrial zone, improved
238	Commercial land, industrial zone
240	Commercial land, unzoned farm land, vacant
241	Commercial land, unzoned farm land, improved
251	Commercial land, unzoned farm land, improved
260	Commercial land, misc, vacant
261	Commercial land, misc, improved
270	Commercial land, permanent farm use disqualification, vacant
271	Commercial land, permanent farm use disqualification, improved
279	Commercial land, permanent farm use disqualification, manufactured
281	Commercial land, multiple special assignments, vacant
290	Commercial land, potential development, vacant
291	Commercial land, potential development, improved
292	Commercial land, potential development, condominium
300	Industrial land, vacant

301	Industrial land, improved
303	Department of Revenue appraised industrial
311	Industrial land, residential zone, improved
321	Industrial land, commercial zone, improved
331	Industrial land, industrial zone, improved
340	Industrial land, unzoned farm land, vacant
341	Industrial land, unzoned farm land, improved
343	Industrial land, unzoned farm land, state responsibility
351	Industrial land, EFU, improved
360	Industrial land, misc, vacant
361	Industrial land, misc, improved
370	Industrial land, permanent farm use disqualification, vacant
371	Industrial land, permanent farm use disqualification, improved
379	Industrial land, permanent farm use disqualification, manufactured
390	Industrial land, potential development, vacant
391	Industrial land, potential development, improved
392	Industrial land, potential development, condominium
399	Industrial land, potential development, manufactured structure
400	Tract land, vacant
401	Tract land, improved
431	Tract land, industrial zone, improved
440	Tract land, unzoned farm land, vacant
441	Tract land, unzoned farm land, improved
450	Tract land, EFU, vacant
451	Tract land, EFU, improved
460	Tract land, misc, vacant
461	Tract land, misc, improved
470	Lakefront tract land, vacant
471	Lakefront tract land, improved
490	Tract land, potential development, vacant
491	Tract land, potential development, improved
492	Tract land, potential development, condominium
500	Farm land, vacant
501	Farm land - limited by ownership rights (e.g. easements)
502	Zoned farm land (EFU
503	Unzoned farm property
540	Non EFU farmland vacant
541	Non EFU farmland improved
542	Farm land, unzoned farm land, condominium
544	Farm land, unzoned farm land, partially exempt
546	Farm land, unzoned farm land, waterfront
550	EFU farmland vacant
551	EFU farmland improved
560	Farm land, misc, vacant
561	Farm land, misc, improved
571	Farm land, permanent farm use disqualification, improved
573	Farm land, permanent farm use disqualification, state responsibilit
574	Farm land, permanent farm use disqualification, partially exempt

575	Farm land, permanent farm use disqualification, taxable leased
576	Farm land, permanent farm use disqualification, waterfront
592	Farm land, potential development, condominium
594	Farm land, potential development, partially exempt
600	Forest land, vacant
601	Forest land, misc, vacant
610	Forest land, improved
640	Designated forest land and-or SWO vacant
641	Designated forest land and-or SWO improved
642	Forest land, unzoned farm land, condominium
644	Forest land, unzoned farm land, partially exempt
646	Forest land, unzoned farm land, waterfront
648	Forest land, unzoned farm land, misc
660	Reforest land, vacant
671	Forest land, permanent farm use disqualification, improved
672	Forest land, permanent farm use disqualification, condominium
673	Forest land, permanent farm use disqualification, state responsibil
674	Forest land, permanent farm use disqualification, partially exempt
677	Forest land, permanent farm use disqualification, mobile home parks
678	Forest land, permanent farm use disqualification, misc
701	Multiple housing, improved
707	Manufactured structure park
711	Multiple-family land, residential zone, improved
721	Multiple-family land, commercial zone, improved
731	Multiple-family land, industrial zone, improved
740	Multiple-family land, unzoned farm land, vacant
741	Multiple-family land, unzoned farm land, improved
751	Multiple-family land, EFU, condominium
761	Multiple-family land, misc, improved
770	Multiple-family land, permanent farm use disqualification, vacant
771	Multiple-family land, permanent farm use disqualification, improved
779	Multiple-family land, permanent farm use disqualification, manufact
781	Multiple-family land, multiple special assignments, improved
792	Multiple-family land, potential development, condominium
800	Recreation land, vacant
801	Recreation land, improved
831	Summer home on government owned land
901	Exempt, student housing, improved
905	Exempt, student housing, temporarily exempt
910	Exempt, church, vacant
915	Exempt, church, temporarily exempt
920	Exempt, school, vacant
921	Exempt, school, improved
925	Exempt, school, temporarily exempt
935	Exempt, cemetery, temporarily exempt
940	Exempt, city, vacant
946	Exempt, city, Native American holdings
947	Exempt, city, misc

949	Exempt, city, manufactured structure
950	Exempt, county, vacant
951	Exempt, county, improved
952	Exempt, county, partially exempt
953	Exempt, county, taxable leased property
954	Exempt, county, in lieu of value
955	Exempt, county, temporarily exempt
960	Exempt, state, vacant
965	Exempt, state, temporarily exempt
970	Exempt, federal, vacant
971	Exempt, federal, improved
972	Exempt, federal, partially exempt
981	Exempt, fraternal org, improved
982	Exempt, fraternal org, partially exempt
983	Exempt, fraternal org, taxable leased property
984	Exempt, fraternal org, in lieu of value
985	Exempt, fraternal org, temporarily exempt
990	Exempt, port or municipal property, vacant
999	Exempt, port or municipal property, manufactured structure
381	Industrial land, multiple special assignments, improved
479	Tract land, permanent farm use disqualification, manufactured struc
572	Farm land, permanent farm use disqualification, condominium
661	Reforest land, improved
700	Multiple housing land, vacant
760	Multiple-family land, misc, vacant
900	Exempt, student housing, vacant
945	Exempt, city, temporarily exempt

Top of page

replacement, lapping the existing surface at least one-half the width of the roller, and progressing toward the center of the replacement area. Each preceding track shall be overlapped by at least one-half the width of the roller and make sufficient passes over the entire area to produce the desired result, as determined by the District or City. The finished surface of the new compacted paving shall be flush with the existing surface and shall conform to the grade and crown of the adjacent pavement. Immediately after the new paving is compacted, all joints between new and original asphaltic pavement shall be painted with hot asphaltic or asphaltic emulsion and be covered with dry paving sand before the asphaltic solidifies.

e. Protection of Structures. The Contractor shall provide whatever protective coverings may be necessary to protect the exposed portions of bridges, culverts, curbs, gutters, posts, guard fences, road signs, and any other structures from the paving operations. All oil, asphalt, dirt, or other undesirable matter that may come upon these structures by reason of the paving operations shall be removed.

Existing and new water valve boxes, manholes, catch basins, or other underground utility appurtenances shall be made level with the finish asphalt grade. The District or City or other appropriate authority shall be contacted prior to any facility adjustments for guidance as to the appropriate procedures, standards and materials to be used. All covers shall be protected during asphalt application.

f. Rock Surfacing. Where so directed by the District or City, the Contractor shall place a minimum of two inches of level course rock, as specified in this Chapter, for the full width of all streets, driveways, parking areas, street shoulders, and other areas disturbed by the construction.

g. Contractor's Responsibility. The Contractor shall repair all settlement of pavement over trenches within the warranty period at no charge to the District or City.

h. Driveways. Driveways shall be replaced to original conditions following the work. Such replacement shall be done in accordance with all applicable legal standards for road shoulders within the limits of the work.

5.04 Bores

5.04.1 General

The carrier pipe in all bores shall be installed within a steel case, unless otherwise

approved by the District.

5.04.2 Installation

a. Casing. The casing shall be smooth steel of a size to permit proper construction to the required line and grade. The steel casing shall be fabricated in sections for field welded joints. The casing wall thickness shall be a minimum size of 1/4-inch or in accordance with the requirements of the jurisdiction of the right-of-way.

b. Pipe Supports. The sewer pipe shall be supported on three sides by pipe supports. Pipe supports shall be No. 2 Western Red Cedar or pressure treated Western Douglas Fir, or approved equal.

c. Placing Fill in Casing. The annular space shall be filled between the casing and pipe completely with lean grout or sand to prevent pipe flotation.

d. Concrete Seals. After the sewer pipe has been tested and approved, concrete plugs shall be poured at each end of the casing.

Chapter 6

TECHNICAL SPECIFICATIONS FOR SANITARY SEWER SYSTEM

Section 6.01 General Provisions

6.02 Manholes and Structures

6.03 Sewer Pipe and Fittings

6.04 Installation

6.05 Testing and Acceptance

Chapter 6

TECHNICAL SPECIFICATIONS FOR SANITARY SEWER SYSTEM

6.01 General Provisions

The technical specifications contained in this chapter, together with Oregon Department of Environmental Quality and U.S. Environmental Protection Agency standards and any other applicable requirement of the District and City, shall govern the character and quality of material, equipment, installation and construction procedures for gravity flow portions of public sanitary sewer system.

6.02 Manholes and Structures

6.02.1 Materials

a. Aggregate and Portland Cement. Aggregate and Portland Cement shall meet the standards set forth in APWA 1990 Standard Specifications and Drawings Manual, Sections 212.2.02 and 212.2.03 respectively.

b. Concrete. Concrete shall conform to the requirement of ASTM C94, Alternate 2. Compressive field strength for manhole bases and miscellaneous concrete structures shall be not less than 3,000 psi at 28 days. Maximum size of aggregate shall be 1-1/2 inches. Slump shall be between two and four inches.

c. Manhole Frames and Covers. Casting shall be tough, close-grained gray iron, smooth and clean, free from blisters, blowholes, and all defects, and conform to ASTM A48, Class 30. To ensure flat, true surfaces, all bearing surfaces shall be planed or ground. Covers shall be true and set within ring at all points. Frames and covers shall be standard or suburban, solid, depending upon the type and location of the manhole and as approved by the District or City. Watertight frames and covers shall be installed on manholes located within the flood plain areas or along stream corridors. Tamper proof frame and covers shall be installed on manholes in easement areas.

d. Precast Manholes. Materials for precast concrete manholes shall conform to the requirements of ASTM C478. Minimum wall thickness shall be five inches. Cones shall have the same wall thickness and reinforcement as riser sections. Joints shall be tongue and groove, rubber ring or keylock type. Cones shall be eccentric.

Prior to the delivery of any size of precast manhole section to the job site, yard permeability tests shall be conducted at the point of manufacture. The precast sections to be tested shall be selected at random from the stockpile material, which is to be supplied to the project. The sections shall meet the permeability test requirements of ASTM C14.

e. Precast Bases. At the option of the Contractor, precast base sections or manhole bases may be used provided all the details of construction are approved prior to construction.

f. Pipe Stubouts for Future Connections. Pipe stubouts shall be of the same type as approved for use in the lateral, main, or trunk lines. Strength classifications shall be of the same class as in adjacent trenches. Where two different classes of pipe exist at a manhole, the higher strength pipe will govern strength classification. Rubber-gasketed watertight plugs shall be furnished with each stubout and shall be adequately braced against air test pressures. Knockouts may be used in place of stubouts with the District/City approval.

g. Preformed Plastic Gaskets. Gaskets shall be Kent-seal No. 2 or Ram Neck, or approved equal.

h. Manhole Steps. Materials shall be 3/4-inch galvanized Grade 40, ASTM A-123/A-615 or plastic with reinforcing bar, a minimum 1/2" Grade 60, meeting requirements of ASTM A615 encapsulated with injection molded copolymer polypropylene with serrated surfaces.

i. Nonshrink Grout. Nonshrink grout shall be Sika 212, Euco N-S, Five Star, or CWS approved equal nonmetallic cementitious commercial grout exhibiting zero shrinkage. Grout shall not be amended with cement or sand and shall not be reconditioned with water after initial mixing. Nonshrink grout shall be placed or packed only with the use of an approved commercial concrete bonding agent. Unused grout shall be discarded after 20 minutes and shall not be used.

j. Chimney Seals. The internal and external rubber seal and seal extensions shall be as manufactured by Cretex Specialty Products, or CWS approved equal. The sleeves and extensions shall have a minimum thickness of 3/16-inches and shall be extruded from a high-grade rubber compound conforming to the applicable requirements of ASTM C923. The bands used for compressing the sleeve and extension against the manhole shall be fabricated from 16-gauge stainless steel conforming to ASTM A240 type 304, and screws, bolts, or nuts used on this band shall be stainless steel.

k. Manhole Pipe Connector. A flexible connector that is designed to produce a positive watertight connection for pipes entering a precast manhole. The connector shall be manufactured by A. Lok or a CWS approved equal and meet the requirements of ASTM C-923.

l. Concrete Manhole Closure Collar. All grade rings including casting shall be set in a minimum of one inch of nonshrinking grout. The Contractor shall pour concrete closure collars within the entire dimensions, as shown on Standard Detail Sheet No. 130-SA, using approved form materials and or methods. Concrete shall conform to C94 Alternate 2 and shall have a compressive strength of 3000 psi at 28 days.

m. Structure Marker. Posts shall be a minimum of 8 feet in length and shall be treated 4"x4" or 2" galvanized steel or as approved by District.

6.02.2 Workmanship on Manholes

a. Foundation Stabilization. If, in the opinion of the District or City unstable material exists that will not support the manhole or other structure, the Contractor shall install geotextile fabric or excavate below grade and backfill with foundation stabilization material.

b. Pipe Connections. All rigid pipes, except ductile iron or reinforced concrete, entering or leaving a manhole shall be provided with flexible joints within one foot of the manhole structure and shall be placed on firmly compacted bedding. Special care shall be taken to ensure that the openings through which sanitary sewer pipes enter the structure are completely watertight by using non-shrink grout. All flexible pipes shall be connected to manholes by using PVC sanded bell adapter, kornseal boot, or solvent cement and clean sand application according to the manufacturer's recommendations.

Flexible Joints. Where the last joint of the line laid up to a manhole is more than one foot from the manhole base on pipe smaller than 24 inches, a six-inch concrete encasement shall be constructed around the entire pipe from the manhole base to within one foot of the pipe joint. The pipe encasement shall be constructed integrally with the manhole base. Pipes laid out of the manhole shall be shortened to ensure that the first flexible joint is no more than one foot from the manhole base.

c. Drop Manholes. The maximum free fall in a manhole is two feet, measured from the existing flowline to the new flowline. When the drop is more than two feet, an approved drop connection shall be used.

d. Concrete Bases (Poured in Place). The Contractor shall remove water from the excavated area, provide 12 inches minimum layer of compacted 3/4-inch minus of crushed rock for a base, and construct the concrete base so that the first precast manhole section has a uniform bearing throughout the full circumference. There shall be a minimum of eight inches of concrete between the compacted gravel and the lowest invert of the manhole. The Contractor shall deposit sufficient concrete on the base to assure a watertight seal between base and manhole wall. Twenty-four hours shall be allowed to elapse before placing the remaining sections on the base unless otherwise approved by the District or City.

e. Placing Manhole Section. The Contractor shall clean the end of sections of foreign materials and install the preformed plastic gasket in conformance with the manufacturer's recommendations.

f. Manhole Inverts. The Contractor shall construct manhole inverts in conformance with details and with smooth transitions to ensure an unobstructed flow through manhole, and remove all sharp edges or rough sections.

g. Manhole Stubouts. The Contractor shall install stubouts from manholes for sewer extensions as shown or as required by the District or City. A watertight flexible connection shall be used for pipe sizes six inches through 18 inches in all new manholes installed. The Contractor shall construct invert channels in accordance with standard drawings. The maximum length of stubouts in existing manholes shall be 15 feet outside the manhole wall with no connections made to the line. Pipes shall be grouted in precast walls or manhole base to provide watertight seal around the pipes. The Contractor shall provide compacted base rock as specified to undisturbed earth under all stubouts. Knockouts may be used in place of stubouts with District or City approval.

h. Manhole Extensions, Rings, and Covers. The Contractor shall install rings and covers on top of manholes to positively prevent all infiltration of surface or groundwater into manholes. Rings shall be set in a bed of nonshrinking grout with the nonshrinking grout carried over the flange or the ring and shall be set so that tops of covers are flush with the surface of adjoining pavement, or one foot above natural ground, unless otherwise directed by the District or City. Extensions shall be limited to a maximum height of 27 inches from the center point of the first step to the top of the casting.

i. Manhole Taps. Taps into existing manholes shall be core drilled unless approved otherwise by the District or City. All non-concrete pipe material used on a manhole tap shall be adapted with a water tight coupling compatible with concrete or approved equal (e.g., sanded manhole adapter, inserted manhole boot). The bonding material used to connect the pipe and/or coupling to the manhole must be non-shrink material that is approved by the District or City to insure no ground water infiltration occurs.

j. Structure Marker. The District may require that structures located outside the right-of-way be marked with the installation of an approved marking post.

6.02.3 Types of Connections

a. Connection to Existing Manholes. The Contractor shall connect sanitary lines to existing manholes at locations indicated; provide all diversion facilities and perform all work necessary to maintain sanitary flow in existing sanitary systems during connection to the manholes; and break out existing manhole bases or grouting as necessary and regrout to provide smooth flow into and through existing manholes. The Contractor shall allow no debris to enter the existing system while making the connection.

b. Manholes Over Existing Sanitary Sewer Systems. The Contractor shall construct manholes over existing sanitary lines at locations shown on plans. Final connection to the existing sanitary sewer shall not be made until the system has been tested in accordance with the requirements of Section 6.05 and is ready for acceptance as outlined in Chapter 2. All broken edges shall be covered with nonshrinking grout and troweled smooth. The Contractor shall prevent any debris from entering the manhole while breaking into the existing pipe.

6.03 Sewer Pipe and Fittings

6.03.1 General

Sanitary sewer pipe shall have flexible gasket joints. Joints on all fittings shall be the same as the joints used on the pipe. Caps or plugs shall be furnished with each fitting, outlet, or stub as required with the same type gasket and/or joint in the pipe.

6.03.2 Materials

Materials shall be the following types or equal when approved in writing by the CWS.

a. Concrete Pipe.

1. Nonreinforced concrete pipe shall conform to requirements of ASTM C14. Unless otherwise specified, pipe shall conform to Class 3 design requirements.

2. Reinforced concrete, nonpressure pipe shall conform to the requirements of ASTM C76 or C655 and shall be of the class specified. Unless otherwise specified, pipe shall meet the design requirements of Wall B. Reinforced concrete low head pressure pipe shall conform to the requirements of ASTM C361.

3. Gaskets shall conform to the requirements of ASTM C443.

4. All concrete pipes must be at least seven days old before it can be installed if it has been steam cured. If the pipe has not been steam cured, it must cure for a minimum of 21 days prior to use.

b. Ductile Iron Pipe

1. Ductile iron pipe shall conform to the requirements of ANSI A21.50-1 or AWWA C150-1, cement lined push-on joint. The minimum thickness class shall be Class 50 (up through 12-inch diameter pipe) and Class 51 (for 14-inch diameter and larger pipe).

c. Polyvinyl Chloride Pipe (PVC)

1. Type

a) ASTM 3034 SDR 35 or SDR 26 dia. 4-15"

b) ASTM F-679 SDR 35 dia. 18-24"

c) ASTM C-900; D-1784 DR 18 dia. 4-12"

d) ASTM C-905; D-1784, DR 18 dia. 16-24"

2. Gaskets shall conform to the requirements of ASTM 477 and ASTM 3212.

d. Fittings

1. General. Tee fittings shall be provided in the sewer main for side sewers. All fittings shall be of sufficient strength to withstand all handling and load stresses encountered. All fittings shall be of the same materials as the pipe unless otherwise approved. Fittings shall be free from cracks and shall adhere tightly to each joining surface. All fittings shall be capped or plugged, and gasketed with the same gasket material as the pipe joint, fitted with an approved mechanical stopper, or have an integrally cast knockout plug. The plug shall be able to withstand all test pressures without leaking, and when later removed, shall permit continuation of piping with joints similar to those in the installed line.

2. Concrete Pipe. Fittings shall be manufactured integrally and be of a class at least equal to that of the adjacent pipe.

3. Ductile Iron. Fittings shall be mechanical or push-on of the class as specified. Mechanical joint cast iron fittings shall conform to AWWA C110 and shall be of a class at least equal to that of the adjacent pipe. Push-on joint fittings shall be gray iron with body thickness and radii of curvature conforming to ANSI A21.10.

4. PVC Pipe. Fittings shall conform to the applicable portions of the following specifications: ASTM D1785, ASTM D2729, ASTM D2466, ASTM 2467, ASTM D3033, and ASTM D3034. Fitting joints shall be the same as the pipe joints.

5. Line Tap Fittings.

a) PVC (polyvinyl chloride) Tee Saddle -- manufactured in accordance with ASTM D-3034 with minimum cell classification of 12454B-C or 12364-C as defined in ASTM D-1784. Elastomeric seals meeting ASTM F-477 specifications, and is located at both the lead and skirt ends of the saddle. Stainless steel bands meeting series 300 and is a full 9/16-inch wide. This saddle is allowed on PVC, clay, IPS, concrete, asbestos cement, and PE pipe.

b) Inserta Tee shall meet the same standards as the PVC Tee Saddle. This saddle is allowed only on thick wall pipe

material, e.g., concrete, ductile iron, rib type plastic. See Standard Detail 190.

e. Grout. Grout shall be Sika 212, Euco N-S, Five Star, or approved equal nonmetallic cementitious commercial grout exhibiting zero shrinkage per ASTM C-827 and CRD-C-621. Grout shall not be amended with cement or sand and shall not be reconditioned with water after initial mixing.

f. Proof Tests. The District or City may require that a joint system be prequalified as to the watertightness capability of the joint system. Material and test equipment for proof testing shall be provided by the manufacturer. When approved, internal hydrostatic pressure may be applied by a suitable joint tester. Pipe material and joint assembly may be subject to the following three proof tests at the discretion of the District or City.

1. Pipe in Straight Alignment. No less than three or more than five pipes selected from stock by the District or City shall be assembled according to the manufacturer's installation instructions with the ends suitably plugged and restrained against internal pressure. The pipe shall be subjected to 10 psi hydrostatic pressure for 10 minutes. Free movement of water through the pipe joint wall shall be grounds for rejection of the pipe.

2. Pipe in Maximum Deflected Position. A test section description follows for each pipe material. The pipe shall be subjected to 10 psi hydrostatic pressure for 10 minutes. Free movement of water through the pipe joint or pipe wall shall be grounds for rejection of the pipe.

3. Joints under Differential Load. The test section shall be supported on blocks or otherwise as described for each pipe material. There shall be no visible leakage when the stressed joint is subjected to 10 psi internal hydrostatic pressure for 10 minutes.

a) Concrete Pipe. For deflected position, a position one-half inch wider than the fully compressed position shall be created on one side of the outside perimeter. For differential loads, one pipe shall be supported so that it is suspended freely between the adjacent pipes bearing only on the joints. In addition to the weight of the suspended pipe, a test load shall be added as given in the following table:

TEST LOADS FOR PIPES UNDER DIFFERENTIAL LOAD
(Concrete Pipe)

Pipe Size (Inches)	Load Per Foot Laying Length up to 4 Feet (Pounds)	Total Load for Pipe 4 Feet and Over (Pounds)
4	650	2,600
6	1,000	4,000
8	1,300	5,200
10	1,400	5,600
12	1,500	6,000
15	1,850	7,400
18	2,200	8,000
21	2,500	10,000
24 and over	2,750	11,000

b) Ductile Iron Pipe. For deflected position, a position 1/2-inch wider than the fully compressed section shall be created on one side of the outside perimeter. For differential loads, one of the pipes shall be supported so that it is suspended freely between adjacent pipe bearing only on the joints. A force shall be applied per the following table along a longitudinal distance of 12 inches immediately adjacent to one of the joints:

TEST LOADS FOR PIPES UNDER DIFFERENTIAL LOAD
(Ductile Iron Pipe)

Pipe Size (Inches)	Force (Pounds)	Pipe Size (Inches)	Force (Pounds)
4	600	15	3,700
6	900	18	4,400
8	1,200	21	5,000
10	15,000	24 and over	5,500
12	18,000		

c) PVC Pipe. For deflected position, two 12-1/2 foot lengths shall be joined, then deflected along an arc of 720-foot radius (0.11 feet offset at the end of each length from a tangent at the joint). For differential load, two lengths shall be joined and uniformly supported for at least two feet on both sides of the joint and adjacent pipe to 95 percent of its vertical diameter.

6.04 Pipe Installation

6.04.1 Workmanship

a. Line and Grade. Survey control hubs for both line and grade shall be provided by the District or Engineer in a manner consistent with accepted practices. The Contractor shall establish line and grade for pipe by the use of lasers or by transferring the cut from the offset stakes to the trench at whatever intervals necessary to maintain the line and grade. The Contractor shall check line and grade as necessary. In the event that the limits prescribed in this chapter are not met, the work shall be immediately stopped, the District notified, and the cause remedied before proceeding further with the work. Variance from the established line and grade shall not be greater than 1/32-inch per inch of pipe diameter and shall not exceed 1/2-inch for line and 1/4-inch for grade, providing that such variation does not result in a level or reverse-sloping invert. Variation in the invert elevation between adjoining ends of pipe shall not exceed 1/64-inch per inch of pipe diameter, or 1/2-inch maximum.

b. Side Sewer Connections. All side sewer connections shall be made with tee fittings unless otherwise approved by the District or City. Tee stations will be staked by the Engineer.

c. Pipe Handling. The Contractor shall unload pipe only by approved means. Pipe shall not be dropped to the ground and shall not be dropped or dumped into trenches. The Contractor shall inspect all pipes and fittings prior to lowering into trench to insure no cracked, broken, or defective materials are used. The Contractor shall clean ends of pipe thoroughly, remove foreign matter and dirt from inside of pipe, and keep it clean during laying and joining. The Contractor shall lower pipe into the trench in such a manner as to avoid any physical damage to the pipe. The Contractor shall remove all damaged pipe from the job site.

d. The Contractor shall not break into an existing sanitary sewer line until the system has been tested in accordance with the requirements of Section 6.05 and is ready for acceptance by the District or City, as outlined in

Chapter 2. When a Contractor ties into a "live" line, the Contractor shall keep the new line plugged at the downstream end of the construction to prevent entry of groundwater and debris into the District or City sanitary sewer system.

e. Foreign Material. The Contractor shall take all precautions necessary to prevent excavated or other foreign material from entering into the pipe during the laying operation. At all times, when laying operations are not in progress, the Contractor shall use a mechanical plug at the open end of the last laid section of pipe to prevent entry of foreign material or creep of the gasketed joints.

f. Pipe Laying. Pipe laying shall proceed upgrade with spigot ends pointing in the direction of the flow. After a section of pipe has been lowered into the prepared trench, the Contractor shall clean the end of the pipe to be joined, the inside of the joint, and the rubber ring (if required) immediately before joining the pipe, and make assembly of the joint in accordance with the recommendations of the manufacturer for the type of joint used. The Contractor shall provide all special tools and appliances required for the jointing assembly. After the joint has been made, the pipe shall be checked for alignment and grade. The trench bottom shall form a continuous and uniform bearing and support for the pipe at every point between joints.

g. Movable Shield. When pipe is laid within a movable trench shield, the Contractor shall take all necessary precautions to prevent pipe joints from pulling apart when moving the shield ahead. The bottom of the shield shall not extend below the springline of the pipe without recompacting the pipe zone.

h. Cutting Pipe. When cutting or machining the pipe is necessary, the Contractor shall use only tools and methods recommended by the pipe manufacturer and approved by the District or City. The Contractor shall cut cast iron or ductile iron pipe with milling type cutter or with rolling pipe cutter and shall not flame cut.

i. Transition Fittings. When joining different types of pipes, the Contractor shall use approved rigid fittings. No flexible fittings will be approved. Bell type couplings are considered flexible and are not acceptable.

    1. PVC couplers or adapters shall meet the ASTM 3034-SDR 35/C900-DR 18-D1784 specifications.

2. Ductile iron transition couplings shall meet the ASTM A536-80 for center and end rings, ASTM D2000 3 BA75 for gaskets and AWWA C-111-80 for bolts and nuts.

j. Concrete Closure Collars. The Contractor shall pour closure collars against undisturbed earth, remove all water from the excavation, construct suitable forms to obtain shapes that will provide full bearing surfaces against undisturbed earth as indicated, and use closure collars only when approved by the District or City, and then only to make connections between dissimilar pipe or where standard rubber-gasketed joints are impractical. Before the closure collars are installed, the Contractor shall wash pipe to remove all loose material and soil from the surface on which they will be placed.

k. Pipe Bedding. The Contractor shall install pipe zone material uniformly on both sides of the pipe up to the springline of the pipe. Material shall be compacted to insure proper support within the haunching area.

l. Line Taps

1. Line taps shall be core drilled unless approved otherwise by the District or City. Core drilled holes shall be done using a cylinder style hole saw for plastic pipe material or a diamond core bit for concrete and ductile iron pipes.

2. Prior to installation of the saddle, the area around the saddle installation shall be clean and free of all rough edges.

3. While installing the saddle, no rock, dirt, or debris shall be allowed to enter the main sewer line.

4. The Contractor shall install 3/4-inch minus gravel in the pipe zone around the line tap, from 4-inches below the pipe or to undisturbed ground and to 6-inches above the pipe.

5. Magnetic tape shall be installed within 18 inches of the top of pipe on all side sewers.

6. The sewer main shall be two sizes (nominal inside diameter) larger than the line tap.

6.05 Testing and Acceptance

6.05.1 General

a. All gravity sanitary pipelines shall pass the required air tests, pass the required compaction test, be video inspected, and be free of visible leaks. All flexible pipes shall pass a deflection test. All projects shall pass the required manhole tests. On sanitary sewer pipe 42-inches in diameter and larger, individual joints may be tested by an approved joint testing device. All details of testing procedures shall be subject to approval of the District.

b. Test Equipment

The Contractor shall furnish all necessary testing equipment and perform the tests in a manner satisfactory to the District or City. Any arrangement of testing equipment, which will provide observable and accurate measurements of either air or water leakage under the specified conditions, will be permitted. Gauges for air testing shall be calibrated with a standardized test gauge.

6.05.2 Line Cleaning

Prior to the internal pressure testing and inspection of the system by the District or City, the Contractor shall ball and flush and clean all parts of the system. The Contractor shall remove all accumulated construction debris, rocks, gravel, sand, silt, and other foreign material from the system at or near the closest downstream manhole. If necessary, the Contractor shall use mechanical rodding or bucketing equipment. Upon the District or City inspection of the system, any foreign matter still present shall be flushed and cleaned as required.

6.05.3 Manholes

a. Unless otherwise approved by the District, acceptance tests shall be conducted on a random sample of 25 percent or 3 sewer manholes, whichever is greater, selected by the District or City. Any manhole which fails acceptance testing shall be repaired and retested, and an additional manhole, selected at random, by the District or City shall be tested.

b. Sanitary sewer manholes shall be tested for acceptance after the trench has been backfilled, compaction requirements have been met, road base rock has been installed and the street paved, and chimney seals or concrete manhole closure collars have been installed. If the manholes have passed

the tests and the castings have been disturbed by construction activities or need to be reinstalled, the manholes shall be re-tested.

c. Hydrostatic Testing. The test will consist of plugging all inlets and outlets and filling the manhole with water to the rim. Leakage in each manhole shall not exceed 0.2 gallons per hour per foot of head above the invert. Leakage will be determined by refilling to the rim using a calibrated or known volume container. Testing results shall be recorded on a form approved by the District.

d. Vacuum Testing. The test will consist of plugging all inlets and outlets. The test head shall be placed at the inside of the top of the cone shall include grade rings and castings, and the seal inflated in accordance with the manufacturer's recommendations. A vacuum of 10-inches of mercury shall be drawn and the vacuum pump shut off. With the valves closed, the time shall be measured for the vacuum to drop to 9-inches. The manhole shall pass if the time for the vacuum reading to drop to 9-inches meets or exceeds the values indicated in Table 6.1.

TABLE 6-1 VACUUM TESTING TABLE

Depth of Manhole (feet)	Allowable Time (seconds)		
	48-inch	60-inch	72-inch
8	20	26	33
10	25	33	41
12	30	39	49
14	35	46	57
16	40	52	65
18	45	59	73
20	50	65	81
22	55	72	89
24	59	78	97
26	64	85	105
28	69	91	113
30	74	98	121

6.05.4 Air Testing, Pipe Line

a. General. After construction of the system, including service connections, required compaction testing, and backfilling, the Contractor shall conduct a low-pressure air test. The Contractor shall provide all equipment and personnel for the test. The method, equipment, and personnel shall be subject to the approval of the District and City. The District or City may, at any time, require a calibration check of the instrument used. The pressure gauge used shall have minimum divisions of 0.10 psi and have an accuracy of 0.0625-psi (one-ounce per square inch). All air used shall pass through a single control panel.

b. Safety Precautions. All plugs used to close the sewer for the air test must be capable of resisting the internal pressures and must be securely braced, if necessary. All air testing equipment must be placed above ground and no one shall be permitted to enter a manhole or trench where a plugged line is under pressure. All pressure must be released before the plugs are removed. The testing equipment used must include a pressure relief device designed to relieve pressure in the test line at 10 psi or less and must allow continuous monitoring of the test pressures in order to avoid excessive pressure. The Contractor shall use care to avoid the flooding of the air inlet by infiltrated ground water. The Contractor shall inject the air at the upper plug if possible. Only qualified personnel shall be permitted to conduct the test.

c. Method. All air testing shall be by the Time Pressure Drop Method. The test procedures are described as follows:

1. Clean the lines to be tested and remove all debris.

2. The Contractor has the option of wetting the lines prior to testing.

3. Plug all open ends with suitable test plugs; brace each plug securely.

4. Check the average height of ground water over the line. The test pressures required below (Section 6.05.4.c.8) shall be increased 0.433 psi for each foot of average water depth over the line.

5. Add air slowly to the section of system being tested until the internal air pressure is raised to the test pressure specified below (Section 6.05.4.c.8).

6. After the internal test pressure is reached, at least two minutes shall be allowed for the air temperature to stabilize, adding only the amount of air required to maintain pressure.

7. After the temperature stabilization period, disconnect the air supply.

8. Acceptance shall be based upon meeting or exceeding the requirements specified below. Note the test method is dependent upon the type of pipe material.

   a) Concrete Pipe:

      Air Pressure Drop Method – The tested section, when tested on the air pressure drop method, will be acceptable if the time required for the pressure to drop from 3.5 psi to 2.5 psi is not less than the time in seconds (T) computed by the Formula:

      $T = K/C$
      Where: K and C are computed as follows:

      K = the sum of the computation $0.011d^2L$ for each size of pipe and its length in the section.

      C = the sum of the computation $0.0003882dL$ for each size of pipe and its length in the section, except that the minimum value for C shall be 1.

      d = the inside diameter of the pipe in inches.

      L = the length of pipe in feet.

   b) PVC, HDPE, and Ductile Iron Pipe:

      The minimum time duration permitted for the prescribed low-pressure exfiltration pressure drop between two consecutive manholes should not be less than that shown in Tables 6-1 or 6-2. The tables list test duration values for pressure drops of 1.0 psi and 0.5 psi in excess of ground water pressure above the top of the sewer pipe, respectively. Values given accommodate both an allowable average loss per unit of surface area and an allowable maximum total leakage rate.

9. Record the diameter (in), length (ft), end manhole number, time, pressure drop, and groundwater level of the test on an inspection form. The recording form shall become a permanent record of the project.

6.05.5 Deflection Test for Flexible Pipe

Sanitary sewers constructed of flexible pipe materials shall be deflection-tested. The test shall be conducted by pulling an approved mandrel through the completed pipeline. The diameter of the mandrel shall be 95 percent of the nominal pipe diameter unless otherwise specified by the District. The mandrel shall be a rigid, nonadjustable, odd-numbering-leg (9 legs minimum) mandrel having an effective length of not less than its nominal diameter.

Testing shall be conducted after the line has been completely balled and flushed out with water, and compaction and air test have been completed and accepted. Air test for storm lines will not be required. The Contractor will be required to locate and repair any sections failing to pass the deflection test and to retest the section with air and deflection tests.

6.05.6 Video Inspection of Gravity Systems

All sanitary sewers shall be video inspected and taped prior to the District or City acceptance of the systems. All pipes shall be thoroughly flushed immediately prior to the video inspection. A 1- inch target ball shall be placed in front of the camera. If the system is video inspected by a private firm or entity other than the District, a copy of the videotape, and a written TV Inspection Report on a form approved by District and City, shall be supplied to the District or City. The videotape shall be recorded in color and on VHS format or in an electronic format as approved by the District. All problems discovered during video inspection shall be noted on the videotape and the written report.

6.05.7 Video Inspection for Warranty Acceptance

The sanitary sewer lines shall be video inspected during the one year warranty period to determine any defects in the system that are to be corrected by the developer or Contractor.

TABLE 6-2
SPECIFICATION TIME REQUIRED FOR A 1.0 PSIG PRESSURE DROP FOR SIZE AND LENGTH OF PIPE INDICATED FOR Q = 0.0015*

1 Pipe Diameter	2 Minimum Time	3 Length for Minimum Time	4 Time for Longer Length	Specified Minimum for Length (L) Shown (min:sec)							
Inches	Min:Sec	Feet	Seconds	100 feet	150 feet	200 feet	250 feet	300 feet	350 feet	400 feet	450 feet
4	3:46	597	.380L	3:46	3:46	3:46	3:46	3:46	3:46	3:46	3:46
6	5:40	398	.854L	5:40	5:40	5:40	5:40	5:40	5:40	5:42	6:24
8	7:34	298	1.520L	7:34	7:34	7:34	7:34	7:36	8:52	10:08	11:24
10	9:26	239	2.374L	9:26	9:26	9:26	9:53	11:52	13:51	15:49	17:48
12	11:20	199	3.418L	11:20	11:20	11:24	14:15	17:05	19:56	22:47	25:38
15	14:10	159	5:342L	14:10	14:10	17:48	22:15	26:42	31:09	35:36	40:04
18	17:00	133	7.692L	17:00	19:13	25:38	32:03	38:27	44:52	51:16	57:41
21	19:50	114	10.470L	19:50	26:10	34:54	43:37	52:21	61:00	69:48	78:31
24	22:40	99	13.674L	22:47	34:11	45:34	56:58	68:22	79:46	91:10	102:33
27	25:30	88	17.306L	28:51	43:16	57:41	72:07	86:32	100:57	115:22	129:48
30	28:20	80	21.366L	35:37	53:25	71:13	89:02	106:50	124:38	142:26	160:15
33	31:10	72	25.852L	43:05	64:38	86:10	107:43	129:16	150:43	172:21	193:53
36	34:00	66	30.768L	51:17	76:55	102:34	128:12	153:50	179:29	205:07	230:46
42	39:48	57	41.883L	69:48	104:42	139:37	174:30	209:24	244:19	279:13	314:07
48	45:34	50	54.705L	91:10	136:45	182:21	227:55	273:31	319:06	364:42	410:17

*Q is the allowable rate in cu.ft/min/sf of inside surface area of pipe.

TABLE 6-3
SPECIFICATION TIME REQUIRED FOR A 0.5 PSIG PRESSURE DROP FOR SIZE AND LENGTH OF PIPE INDICATED FOR Q = 0.0015*

1 Pipe Diameter	2 Minimum Time	3 Length for Minimum Time	4 Time for Longer Length	Specified Minimum for Length (L) Shown (min:sec)							
Inches	Min:Sec	Feet	Seconds	100 feet	150 feet	200 feet	250 feet	300 feet	350 feet	400 feet	450 feet
4	1:53	597	.190L	1:53	1:53	1:53	1:53	1:53	1:53	1:53	1:53
6	2:50	398	.427L	2:50	2:50	2:50	2:50	2:50	2:50	2:51	3:12
8	3:47	298	.760L	3:47	3:47	3:47	3:47	3:48	4:26	5:04	5:42
10	4:43	239	1.187L	4:43	4:43	4:43	4:57	5:56	6:55	7:54	8:54
12	5:40	199	1.709L	5:40	5:40	5:42	7:08	8:33	9:58	11:24	12:50
15	7:05	159	2.671L	7:05	7:05	8:54	11:08	13:21	15:35	17:48	20:02
18	8:30	133	3.846L	8:30	9:37	12:49	16:01	19:14	22:26	25:38	28:51
21	9:55	114	5.235L	9:55	13:05	17:27	21:49	26:11	30:32	34:54	39:16
24	11:20	99	6.837L	11:24	17:57	22:48	28:30	34:11	39:53	45:35	51:17
27	12:45	88	8.653L	14:25	21:38	28:51	36:04	43:16	50:30	57:42	64:54
30	14:10	80	10.683L	17:48	26:43	35:37	44:31	53:25	62:19	71:13	80:07
33	15:35	72	12.926L	21:33	32:19	43:56	53:52	64:38	75:24	86:10	96:57
36	17:00	66	15.384L	25:39	38:28	51:17	64:06	76:55	89:44	102:34	115:23
42	19:74	57	20.942L	34:54	52:21	69:49	87:15	104:42	122:10	139:37	157:04
48	22:67	50	27.352L	45:35	68:23	91:11	113:58	136:46	159:33	182:21	205:09

*Q is the allowable leakage rate in cu. ft/min/sf. of inside surface area of pipe.

Chapter 7

TECHNICAL SPECIFICATION FOR STORM SYSTEMS

Section 7.01 General Provisions

7.02 Manholes and Structures

7.03 Catch Basins and Inlets

7.04 Pipe and Fittings

7.05 Installation

7.06 Testing and Acceptance

Chapter 7

TECHNICAL SPECIFICATIONS FOR STORM SYSTEMS

7.01 General Provisions

The specifications contained in this chapter, together with Oregon Department of Environmental Quality and U.S. Environmental Protection Agency standards and any other applicable requirements of the District and City, shall govern the character and quality of material, equipment, installation and construction procedures for gravity flow portions of public storm systems.

7.02 Manholes and Structures

7.02.1 Materials

a. Aggregate and Portland Cement. Aggregate and Portland Cement shall meet the standards set forth in APWA 1990 Standard Specifications and Drawings Manual, Sections 212.2.02 and 212.2.03 respectively.

b. Concrete. Concrete shall conform to the requirement of ASTM C, Alternate 2. Compressive field strength for manhole bases and miscellaneous concrete structures shall be not less than 3,000 psi at 28 days. Maximum size of aggregate shall be 1-1/2 inches. Slump shall be between two and four inches.

c. Manhole Frames and Covers. Casting shall be tough, close-grained gray iron, smooth and clean, free from blisters, blowholes, and all defects, and conform to ASTM A48, Class 30. To ensure flat, true surfaces, all bearing surfaces shall be planed or ground. Covers shall be true and set within ring at all points. Frames and covers shall be standard or suburban, solid, 16-hole or slotted depending on the type and location of the manhole and as approved by the District or City. Tamper proof frames and covers shall be used on all pipe systems of 24-inches and larger.

d. Precast Manholes. Materials shall conform to the requirements of ASTM C478. Minimum wall thickness shall be five inches. Cones shall have the same wall thickness and reinforcement as riser sections. Joints shall be tongue and groove, rubber ring or keylock type. Cones shall be eccentric.

e. Precast Bases. At the option of the Contractor, precast base sections or manhole bases may be used provided all the details of construction are approved prior to construction.

f. Pipe Stubouts for Future Connections. Pipe stubouts shall be the same type as approved for use in the lateral, main, or trunk lines. Strength classifications shall be the same class as in adjacent trenches. Where two different classes of pipe exist at a manhole, the higher strength pipe will govern strength classification. The District or City may require the length of the stubout to be as long as it is deep. Knockouts may be used with District or City approval.

g. Preformed Plastic Gaskets. Gaskets shall be Kent-seal No. 2 or Ram Neck conforming to federal specifications SS-S-00210 or approved equal.

h. Manhole Steps. Materials shall be 3/4-inch galvanized Grade 40, ASTM A-123/A-615 or plastic with reinforcing bar, a minimum ½" Grade 60, meeting requirements of ASTM A615 encapsulated with injection molded copolymer polypropylene with serrated surfaces.

i. Structure Marker. Posts shall be treated a minimum of 8 feet in length, and shall be treated 4" x 4", or 2" galvanized steel or as approved by District.

7.02.2 Workmanship on Manholes

a. Foundation Stabilization. If, in the opinion of the District or City, unstable material exists that will not support the manhole or other structure, the Contractor shall install geotextile fabric or excavate below grade and backfill with foundation stabilization material.

b. Pipe Connections. All rigid pipes, except ductile iron and reinforced concrete entering or leaving a manhole shall be provided with flexible joints within one foot of the manhole structure and shall be placed on firmly compacted bedding. All flexible pipe shall be connected to manholes by using PVC sanded bell adapter, kornseal boots, or solvent cement and clean sand application according to the manufacturer's recommendations. Aluminum pipe connections to manholes shall be wrapped where they will be in contact with concrete.

c. Flexible Joints. Where the last joint of the line laid up to a manhole is more than one foot from the manhole base on pipes smaller than 24-inches, a six-inch concrete encasement shall be constructed around the entire pipe from the manhole base to within one foot of the pipe joint if required by the District or City. The pipe encasement shall be constructed integrally with the manhole base. Pipes laid out of the manhole shall be shortened to ensure that the first flexible joint is no more than one foot from the manhole base.

d. Concrete Bases (Poured in Place). The Contractor shall remove water from the excavated area, provide 12 inches minimum layer of compacted 3/4-inch minus of crushed rock for a base, and construct the concrete base so that the first precast manhole section has a uniform bearing throughout the full circumference. There shall be a minimum of eight inches of concrete between the compacted gravel and the lowest invert of the manhole. Twenty-four hours shall elapse before placing the remaining sections on the base, unless otherwise approved by the District or City.

e. Placing Manhole Section. The Contractor shall clean the end of sections of foreign materials and install the preformed plastic gasket in conformance with the manufacturer's recommendations.

f. Manhole Inverts. The Contractor shall construct manhole inverts in conformance with details and with smooth transitions to ensure an unobstructed flow through manhole, and remove all sharp edges or rough sections which tend to obstruct flow.

g. Manhole Stubouts. The Contractor shall install stubouts from manholes for sewer extensions as shown or as required by the District or City. The Contractor shall construct invert channels in accordance with standard drawings. The maximum length of stubouts in existing manholes shall be 15 feet outside the manhole wall with no connections made to the line. The stubout may protrude a maximum of one inch into the manhole. The Contractor shall provide compacted base rock as specified to undisturbed earth under all stubouts. Knockouts may be used in place of stubouts with District or City approval.

h. Manhole Extensions, Rings, and Covers. Rings shall be set in a bed of nonshrinking grout with the nonshrinking grout carried over the flange or the ring and shall be set so that tops of covers are flush with the surface of adjoining pavement, or one foot above natural ground, unless otherwise directed by the District or City. Extensions will be limited to a maximum height of 27 inches from the center point of the first step to the top of the casting.

i. Manhole Taps. Taps into existing manholes shall be core drilled unless approved otherwise by the District or City. All non-concrete pipe material used on a manhole tap shall be adapted with a water tight coupling compatible with concrete or approved equal (e.g., sanded manhole adapter, inserted manhole boot). The bonding material used to connect the pipe and/or coupling to the manhole must be non-shrink material that is approved by the District or City to insure no ground water infiltration occurs.

j. Structure Marker. The District may require that structures located outside the right-of-way be marked with the installation of an approved marking post.

7.02.3 Types of Connections

a. Connection to Existing Manholes. The Contractor shall connect storm lines to existing manholes at locations indicated, provide all diversion facilities and perform all work necessary to maintain storm flow in existing storm systems during connection to the manholes. The Contractor shall break out existing manhole bases or grouting as necessary and re-grout to provide smooth flow into and through existing manholes. The Contractor shall allow no debris to enter the existing system while making the connection.

b. Manholes Over Existing Storm Systems. The Contractor shall construct manholes over existing operating storm lines at locations shown on plans; construct the new base under the existing storm lines and the precast sections as specified. The Contractor shall not break into any existing lines until the system has been tested in accordance with the requirements of Section 7.06 and is ready for acceptance as outlined in Chapter 2. All broken edges shall be covered with nonshrinking grout and troweled smooth. The Contractor shall prevent any debris from entering the manhole while breaking into the existing pipe.

7.03. Catch Basins and Inlets

7.03.1 Materials

a. Aggregate, cement and concrete shall meet the requirements set forth in Section 7.02.

b. Frames, Grates and Covers. All materials shall be flat bar steel (standard grade), cast iron or ductile iron meeting the requirements of ASTM A28 Class 30B.

c. Forms. All exterior surfaces shall be formed with steel or plywood. Other surfaces shall be formed with matched boards, plywood, or other approved material. Trench walls, rock, or earth will not be acceptable form material.

d. Metal Reinforcement. All metal reinforcement shall conform to the requirements of ASTM A615, Grade 60, deformed bars.

e. Precast Concrete Units. All precast units shall conform to the same

requirements as manholes ASTM C478.

7.03.2 Workmanship

a. Excavation and backfill will conform to the requirements of subsection 5.02.3 Construction.

b. Bedding. The Contractor shall remove all water and debris from ditch area, provide 8-inches minimum layer of compacted 3/4-inch minus crushed rock for a base.

c. Cast-in-Place. Cast-in-place catch basins shall have a minimum of 6 inches of concrete between the compacted gravel and the lowest invert. The forms used for cast-in-place catch basins shall be tight and well braced. The storm pipe material being used shall extend into the poured concrete of the catch basin. All corners shall be chamfered. Immediately after placement, the concrete shall be consolidated with an approved vibrator. The top surface shall be screed and exposed surfaces troweled to a smooth finish free from marks or irregularities. After forms are removed, the Contractor shall patch any defects in the concrete with approved material.

d. Precast. After the base is prepared the Contractor shall set the precast catch basin to the proper line and grade. The storm pipe material being used shall connect to the precast catch basin.

e. Inverts, Stubouts and Sections. Contractor shall clean the ends of all pipes and sections that come in contact with the catch basin. All inverts, stubouts and sections shall be installed according to the details using a nonshrinking grout, making sure all sharp edges or rough sections are removed, to prevent obstruction of the flow.

f. Catch Basin Steps. All catch basins deeper than four feet, measured from top of frame to flowline, shall have steps.

7.04 Pipe and Fittings

7.04.1 General

The materials used shall be adequate to carry anticipated dead and live loads within the deflection limits specified by the manufacturer. All pipe and culverts shall have a minimum design service life of 75 years per Oregon Department of Transportation standards.

Joints shall be gasketed unless otherwise approved by the District or City.

7.04.2 Materials

Materials shall be the following types or approved equal:

a. Concrete Pipe (NRCP/RCP)

All concrete pipe and fittings shall conform to the requirements in Section 6.03 Sewer Pipe and Fittings.

b. Ductile Iron Pipe (D.I.P.)

All ductile iron pipe and fittings shall conform to the requirements in Section 6.03 Sewer Pipe and Fittings.

c. Polyvinyl Chloride Pipe (PVC)

All PVC pipe and fittings shall conform to the requirements in Section 6.03 Sewer Pipe and Fittings.

d. A2000 (PVC)

All A2000 PVC pipe and fittings shall conform to ASTM F949 specifications.

e. PVC Rib

PW Rib pipe and fittings shall be made of PVC, as defined in ASTM D1784. The pipe stiffness shall correspond with the series as determined in accordance with ASTM D2412. Series 46 and 28 are allowed.

Gaskets shall conform with ASTM 477.

f. Corrugated Polyethylene (CPP)

Corrugated polyethylene pipe, double wall, and fittings shall be made of polyethylene compounds which conform with the physical requirements of Type III, Category 3, 4 or 5, P23, P33, P34, Class C, with the applicable requirements defined in ASTM D1248. Spiral pipe is not acceptable.

g. Corrugated Aluminum (CAP) and Corrugated Aluminum Pipe Arches (CAPA)

1. Corrugated aluminum pipe and fittings shall conform to the

requirements of AASHTO M196, M197.

2. The connecting bands shall conform to the requirements of AASHTO M196, except the minimum width of bands for 12-inch and larger pipe shall be 12-inches. Minimum width for pipes less than 12-inches shall be 7-inches. The base metal of the connecting bands shall be the same base metal as that of the pipe. The gauge of the connecting bands may be two standard use thicknesses lighter than that used for the pipe, but not less than 0.060 of an inch thick. The band couplers shall be connected with stainless steel bolts of not less than ½ inch diameter.

3. Corrugated aluminum pipe shall not be placed in a ditch in direct contact with hydrating Portland Cement or lime.

7.04.3 Line Tap Saddle

All saddles approved for sanitary sewer tap installation shall be allowed on storm taps except that saddles installed on corrugated aluminum pipe shall be fabricated and installed using stainless steel nuts and bolts.

7.05 Installation

7.05.1 Workmanship

a. Line and Grade. Survey control hubs for both line and grade shall be provided by the Engineer in a manner consistent with accepted practices. The Contractor shall establish line and grade for pipe by the use of lasers or by transferring the cut from the offset stakes to the trench at whatever intervals are necessary to maintain the line and grade. The Contractor shall check line and grade as necessary. In the event that the limits prescribed in these specifications are not met, the work shall be immediately stopped, the Engineer notified, and the cause remedied before proceeding further with the work. Variance from the established line and grade shall not be greater than 1/32-inch per inch of pipe diameter and not to exceed ½ inch, providing that such variation does not result in a level or reverse-sloping invert. Variation in the invert elevation between adjoining ends of pipe, due to non-concentricity of joining surface and pipe interior surfaces, shall not exceed 1/64-inch per inch of pipe diameter, or ½-inch maximum.

Tee stations will be staked by the Engineer to enable the Contractor to install services at proper property location.

b. Pipe Handling. The Contractor shall unload pipe only by approved means.

Pipe shall not be unloaded by dropping to the ground and shall not be dropped or dumped into trenches. The Contractor shall inspect all pipe and fittings prior to lowering into trench to insure no cracked, broken, or otherwise defective materials are used. The Contractor shall clean ends of pipe thoroughly, remove foreign matter and dirt from inside of pipe, and keep it clean during laying and joining. The Contractor shall lower pipe into the trench in such a manner as to avoid any physical damage to the pipe. The Contractor shall remove all damaged pipe from the job site.

c. Foreign Material. The Contractor shall take all precautions necessary to prevent excavated or other foreign material from entering into the pipe during the laying operation. At all times, when laying operations are not in progress, the Contractor shall use a mechanical plug at the open end of the last laid section of pipe to prevent entry of foreign material or creep of the gasketed joints.

d. Pipe Laying. Pipe laying shall proceed upgrade with spigot ends pointing in the direction of the flow. After a section of pipe has been lowered into the prepared trench, the Contractor shall clean the end of the pipe to be joined, the inside of the joint, and the rubber ring (if required) immediately before joining the pipe, and make assembly of the joint in accordance with the recommendations of the manufacturer for the type of joint used. The Contractor shall provide all special tools and appliances required for the joint assembly. After the joint has been made, the pipe shall be checked for alignment and grade. The trench bottom shall form a continuous and uniform bearing and support for the pipe at every point between joints.

e. Movable Shield. When pipe is laid within a movable trench shield, the Contractor shall take all necessary precautions to prevent pipe joints from pulling apart when moving the shield ahead. The bottom of the shield shall not extend below the springline of the pipe without recompacting the pipe zone.

f. Cutting Pipe. When cutting or machining the pipe is necessary, the Contractor shall use only tools and methods recommended by the pipe manufacturer and approved by the District or City. The Contractor shall cut cast iron or ductile iron pipe with milling type cutter or with rolling pipe cutter and shall not flame cut.

g. Transition Fittings. When joining different types of pipes, the Contractor shall use approved rigid fittings. No flexible fittings will be approved. Bell type couplings are considered flexible and are not acceptable.

1. Shear ring/ridge transition couplings meeting the ASTM C564 or

equal shall be used.

2. PVC couplers or adapters shall meet the ASTM 3034-SDR 35/C900-DR 18-D1784 specifications.

3. Ductile iron transition couplings shall meet the ASTM A536-80 for center and end rings, ASTM D2000 3 BA75 for gaskets and AWWA C-111-80 for bolts and nuts.

h. Concrete Closure Collars. The Contractor shall pour closure collars against undisturbed earth, remove all water from the excavation, construct suitable forms to obtain shapes that will provide full bearing surfaces against undisturbed earth as indicated, and use closure collars only when approved by the District or City, and then only to make connections between dissimilar pipe or where standard rubber-gasketed joints are impractical. Before the closure collars are installed, the Contractor shall wash pipe to remove all loose material and soil from the surface on which they will be placed.

i. Pipe Zone. The Contractor shall install pipe zone material uniformly on both sides of the pipe up to the springline of the pipe. Material shall be compacted to insure proper support within the haunching area.

j. Line Taps

1. Line taps shall be core drilled unless approved otherwise by the District or City. Core drilled holes shall be done using a cylinder style hole saw for only plastic pipe material or a diamond core bit for concrete and ductile iron pipes.

2. Prior to installation of the saddle, the area around the saddle installation site shall be cleaned and made free of all rough edges.

3. While installing the saddle, no rock, dirt, or debris shall be allowed to enter the main sewer line from the core hole.

4. The Contractor shall install 3/4-inch minus gravel in the pipe zone around the line tap, from 4-inches below the pipe or to 6-inches above the pipe.

5. Magnetic tape shall be installed within 18" of top of pipe on side sewers.

7.06 Testing and Acceptance

7.06.1 General

a. All gravity storm systems shall be video inspected, pass the required compaction test (AASHTO T99), and a deflection test for plastic pipes. All details of testing procedures shall be subject to approval of the District.

b. Test Equipment

The Contractor shall furnish all necessary testing equipment and perform the tests in a manner satisfactory to the District or City.

7.06.2 Line Cleaning

Prior to inspection of the system by the District or City, the Contractor shall ball and flush and clean all parts of the system. The Contractor shall remove all accumulated construction debris, rocks, gravel, sand, silt, and other foreign material from the system at or near the closest downstream manhole. If necessary, the Contractor shall use mechanical rodding or bucketing equipment. Upon the District or City inspection of the system, any foreign matter still present shall be flushed and cleaned from the system as required.

7.06.3 Deflection Test for Flexible Pipe

Storm systems constructed of flexible pipe materials shall be deflection-tested. The test shall be conducted by pulling an approved mandrel through the completed pipeline. The diameter of the mandrel shall be 95 percent of the nominal pipe diameter unless otherwise specified by the District. The mandrel shall be a rigid, nonadjustable, odd-numbering-leg (9 legs minimum) mandrel having an effective length of not less than its nominal diameter.

Testing shall be conducted after the line has been completely balled and flushed out with water, and compaction tests have been completed and accepted.

The Contractor will be required to locate and repair any sections failing to pass the test and to retest the section.

7.06.4 Video Inspection of Gravity Systems

All storm systems shall be video inspected and taped prior to the District or City acceptance of the systems. All pipes shall be thoroughly flushed immediately prior to the video inspection. A one-inch target ball shall be placed in front of the camera. If the system is video inspected by a private firm, a copy of the videotape, and a written TV Inspection Report on a form approved by District and

City, shall be supplied to the District or City. The videotape shall be recorded in color and on VHS format. All problems discovered during video inspection shall be noted on the video and the written reports.

7.06.5 Video Inspection for Warranty Acceptance

The storm sewer line shall be video inspected by the District or City during the one year warranty period to determine any defects in the system that are to be corrected by the developer or Contractor.

Chapter 8

ENVIRONMENTAL PROTECTION, EROSION PREVENTION, AND SEDIMENT CONTROL RULES

Section 8.00 Introduction

8.01 General Policy

8.02 District Enforcement

8.03 Erosion Prevention and Sediment Control

8.04 Contaminated Soils

Chapter 8

ENVIRONMENTAL PROTECTION, EROSION PREVENTION, AND SEDIMENT CONTROL RULES

8.00 Introduction

This chapter identifies requirements for erosion prevention and sediment control (EPSC). The provisions of this chapter are intended to prevent and reduce adverse impacts to the drainage system and water resources of the Tualatin River basin. In combination with other state, federal, and local laws and ordinances, these requirements are intended to protect the beneficial uses of waters within the Tualatin River Basin and within the Clean Water Services service district.

8.01 General Policy

8.01.1 Erosion Prevention and Sediment Control Policy

In order to meet the stringent water quality requirements of the Tualatin River Basin, the use of erosion prevention techniques shall be emphasized, rather than sediment control measures. This shall be especially important on larger construction sites immediately before and during the rainy season. Erosion prevention techniques are designed to protect soil particles from the force of rain and wind so that they will not erode. These techniques include, but are not limited to, such things as construction scheduling, ground cover, and matting. Sediment control measures are designed to capture soil particles after they have been dislodged and attempt to retain the soil particles on-site. These measures include, but are not limited to, silt fences, sediment barriers, and settling basins. Both erosion prevention techniques and sediment control measures have appropriate uses; however, numerous case studies have shown that sediment control measures are less effective in preventing soil movement than erosion prevention techniques.

8.01.2 Existing Vegetation

a. As far as is practicable, the existing vegetation shall be protected and left in place, in accordance with the clearing limits on the approved Erosion Prevention and Sediment Control plans. Work areas shall be carefully located and marked to reduce potential damage. Trees shall not be used as anchors for stabilizing working equipment.

b. Where existing vegetation has been removed, or the original land contours disturbed, the site shall be revegetated, and the vegetation established, as soon as practicable.

8.02 District Enforcement

Failure to comply with any provision of this Chapter or with any term of an Erosion Prevention and Sediment Control Permit shall be deemed a violation of this ordinance and subject to enforcement action pursuant to applicable District and City Ordinance and Resolutions and Orders, including all implementing rules and regulations.

8.03 Erosion Prevention and Sediment Control

8.03.1 Application and Purpose

a. It is a District requirement to reduce the amount of sediment and other pollutants reaching the public storm and surface water system resulting from development, construction, grading, excavating, clearing, and any other activity which accelerates erosion, to the limits prescribed in this Chapter.

b. It is the policy of the District to require temporary and permanent measures for all construction projects to lessen the adverse effects of construction on the environment. All projects shall include properly installed, operated, and maintained temporary and permanent erosion control measures as provided in this section and/or in an approved plan, designed to protect the environment during the term of the project. Additionally, compliance with the measures prescribed in this Chapter and/or in an approved plan do not alleviate or diminish the necessity to provide effective and comprehensive erosion prevention and sediment control, as described in Section 8.03.2. These erosion control rules apply to all properties within the CWS boundary, regardless of whether that property is involved in a construction or development activity.

c. Nothing in this section shall relieve any person of the obligation to comply with the regulations or permits of any federal, state, or local authority.

8.03.2 Erosion Prohibited

a. Visible or measurable erosion as defined in Chapter 1, which enters, or is likely to enter, the public or private storm and surface water system or other properties, is hereby prohibited, and is a violation of these rules. The owner of the property, permittee under a Site Development Permit,

together with any person or persons, including but not limited to the Contractor or the Engineer causing such erosion, shall be held responsible for violation of these rules.

b. No person shall create physical erosion by dragging, dropping, tracking, or otherwise placing or depositing, or permitting to be deposited, mud, dirt, rock or other such debris upon a public street or into any part of the public storm and surface water system, or any part of a private storm and surface water system which drains or connects to the public storm and surface water system. Any such deposit of material shall be immediately removed using hand labor or mechanical means. No material shall be washed or flushed into any part of the storm and surface water system until all mechanical means to remove the debris have been exhausted and preventative sediment filtration is in place. The owner of the property, permittee under a Site Development Permit, together with any person or persons, including but not limited to the Contractor or the Engineer who causes such erosion, shall be held responsible for violation of these rules.

8.03.3 Maintenance

The permittee shall maintain the facilities and techniques contained in the approved Erosion Prevention and Sediment Control Plan so as to continue to be effective during the construction phase, post construction phase, establishment of permanent vegetation, or any other permitted activity. If the facilities and techniques approved in an Erosion Prevention and Sediment Control Plan are not effective or sufficient as determined by the District or City site inspection, the permittee shall submit a revised plan within three working days of written notification by the District or City. Upon approval of the revised plan by the District or City, the permittee shall immediately implement the additional facilities and techniques included in the revised plan. In cases where erosion is likely to occur, the District or City may require the applicant to install interim control measures prior to submittal of the revised Erosion Prevention and Sediment Control Plan.

8.03.4 Inspection

a. District or City Initial Inspection

On a site development or any other type of project, the erosion prevention and sediment control measures shall be installed prior to the start of any permitted activity. The permittee shall call the District or City prior to the foundation inspection of a building for an inspection of the erosion prevention and sediment control measures for that property.

b. Owner Inspections and Inspection Logs

The owner shall be required to inspect Erosion Prevention and Sediment Control measures and provide information on log forms provided by the District. Inspections shall be completed as required by the Erosion Prevention and Sediment Control Planning and Design Manual or the approved plans. Logs are to be maintained on-site and available to District inspectors upon request.

c. Final Inspection

A final erosion control inspection shall be required prior to the sale or conveyance to new property owner(s) or prior to the removal of Erosion Prevention and Sediment Control measurements.

8.03.5 Erosion Prevention Techniques and Methods

The techniques and methods contained and prescribed in the latest addition of the Erosion Prevention and Sediment Control Planning and Design Manual, adopted by Clean Water Services, must be used with the following additional requirements:

a. Gravel Construction Entrance

A gravel construction entrance is required. If there is more than one vehicle access point, a gravel construction entrance shall be required at each entrance. The responsibility for design and performance of the driveway remains with the permittee. Vehicles or equipment shall not enter a property adjacent to a stream, watercourse, or storm and surface water facility, or wetlands unless adequate measures are installed to prevent physical erosion into the water or wetland.

b. Sediment Filters/Barriers

1) The use of straw bales as a sediment barrier is not allowed.

2) A filter system may not be used on catch basins in public streets as a part of single family erosion prevention and sediment control plans.

c. Plastic Sheeting

Plastic sheeting shall generally not be used as an erosion control measure for single family house construction. Plastic sheeting may be used to protect small, highly erodible areas, or temporary stockpiles of material. If plastic sheeting is used, the path of concentrated flow from the plastic

must be protected.

d. Protection Measure Removal
The erosion prevention and sediment control measures shall remain in place and be maintained in good condition until all disturbed soil areas are permanently stabilized by installation and establishment of landscaping, grass, mulching, or otherwise covered and protected from erosion.

e. Wet Weather Measures

On sites where vegetation and ground cover have been removed, vegetative ground cover shall be planted and established by October 1, or as approved by the District. If ground cover is not established by October 1, the open areas shall be protected through the winter with straw mulch, erosion blankets, or other method(s) approved by the District/City.

f. Exceptions to Sediment Barrier Requirements

Sediment barriers are not required on a site:

1) Where there are no concentrated flows and the slope being protected has a grade of less than two (2) percent.

2) Where flows are collected through the use of temporary or permanent grading or other means such that the flows are routed to an approved settling pond, filtering system, or sediment barrier.

3) Where there are no concentrated flows, slopes are less than 10 percent, and where the run-off passes through a grassed area which is either owned by the applicant, or such use is allowed, by written agreement, by the owner of the grassed area. The grass area shall be at least equal in dimensions to the project area.

4) Where the surface is protected by District approved ground cover or matting.

8.03.6 Dust

Dust shall be minimized to the extent practicable, utilizing all measures necessary, including, but not limited to:

a. Sprinkling haul and access roads and other exposed dust producing areas with water.

b. Applying District-approved dust palliatives on access and haul roads.

c. Establishing temporary vegetative cover.

d. Placing wood chips or other effective mulches on vehicle and pedestrian use areas.

e. Maintaining the proper moisture condition on all fill surfaces.

f. Prewetting cut and borrow area surfaces.

g. Use of covered haul equipment.

8.04 Contaminated Soils

In the event the construction process reveals soils contaminated with hazardous materials or chemicals the Contractor shall stop work immediately, ensure no contaminated material is hauled from the site, remove the contractor's work force from the immediate area of the contaminated area, leaving all machinery and equipment, and secure the area from access by the public until such time as a response team has relieved them of that responsibility. The Contractor shall immediately notify an emergency response team, the District/City, and DEQ of the situation.

Chapter 9

STANDARD TECHNICAL SPECIFICATIONS FOR BUILDING SEWERS, SIDE SEWERS AND SIDE STORM PIPELINES

Section 9.01 General Provisions

9.02 Building Sewers

9.03 Installation of Side Sewers and Side Storms

Chapter 9

STANDARD TECHNICAL SPECIFICATIONS FOR BUILDING SEWERS, SIDE SEWERS, AND SIDE STORM PIPELINES

9.01 General Provisions

The specifications contained herein, together with the State of Oregon Uniform Plumbing Code and all other applicable requirements of federal, state and local law shall govern the installation of all building side sewers, and side storm pipelines. See Section 1.02 for definitions of building sewer, side sewer, and side storm pipelines.

9.01.1 Permits, Fees, Other Requirements

The provisions of District ordinances requiring permits, fees, and other requirements shall be complied with prior to the start of work on any portion of the sanitary or storm pipeline systems.

9.01.2 Service to Lots

Where streets or mainline sewers are being constructed as part of a development, individual side sewers and side storm pipelines shall be constructed to serve each lot.

Where adequate fall exists (from the finished grade of the lot to the street gutter), roof and foundation drains may discharge through weepholes in the curb. Calculations shall be provided with submitted plans showing pipe slope and cover at the minimums required by the appropriate authority. The District may require side storm pipelines instead of allowing weepholes for any project, based upon review of the entire storm drainage system.

Where the District or City wants to minimize trench excavation across existing streets and with prior approval from the District or City, a single side sewer may be constructed to serve two adjacent single family dwellings or two duplexes. This may include flag or infill lots with compatible elevations and where there is limited area to install two separate side sewer trenches. Approval will be contingent on the development meeting all of the following conditions:

a. The elevation of the lowest floor with plumbing in the buildings to be served must not differ more than 1 foot; and

b. The side sewer to be constructed must be a minimum of 6-inches in diameter and meet all requirements for public mainline construction as outlined in Chapter 6 of these standards; and

c. A cleanout meeting the requirements of Standard Drawing 175 must be installed at the right-of-way/property line or a location as approved by the District or City; and

d. Backflow prevention devices must be installed on each building sewer upstream of the public cleanout; and

e. No more than two single family dwellings or duplexes may be served by a single side sewer.

9.02 Building Sewer

9.02.1 Licensing of Sewer Contractor

No person other than the owner of the property on which the sewer is being installed or a state or DEQ licensed sewer contractor may excavate or dig up such property and install building sewers within the boundary of the District.

9.02.2 Installation

Building sewers shall be installed in accordance with the Uniform Building Code and Council of American Building Officials (CABO).

9.03 Installation of Side Sewers and Side Storm Pipelines

9.03.1 Material

a. Pipes for side sewers and side storm sewers constructed within the right-of-way or public easements shall be one of the following types or approved equal:

1. PVC (Polyvinyl chloride), conforming to ASTM D3034. Pipe for side sanitary sewers shall be green. Pipe for side storm sewers shall be white.

2. Ductile iron conforming to Class 50.

9.03.2 Excavation and Backfill

All excavation and backfill shall comply with Section 5.02.

9.03.3 Alignment and Grade

Side sewers or side storms shall be laid in a straight grade and alignment from the main sewer line or storm line respectively, to the edge of right-of-way or edge of permanent easement. The maximum length of a side sewer or side storm pipeline shall be 50 feet. The grade shall be a minimum of 2 percent, or as approved by the District or City. The pipe shall be laid on a pipe base of 4-inches of 3/4-inch minus crushed rock. All plastic pipe shall have 3/4-inch minus rock placed 6-inches over the top of the pipe.

9.03.4 Markings

Side sewers and side storms shall be marked with a detectable underground magnetic tape. The magnetic tape shall be placed from the main pipeline to the end of the side lateral with 18-inches separation between the tape and pipe. The magnetic tape shall be green in color and have the following marking depending on whether it is a sanitary or storm line:

a. CAUTION SEWER BURIED BELOW

b. CAUTION STORM DRAIN BURIED BELOW

A 2 x 4 stake shall be installed at the end of the side sanitary or storm extending from the invert of the pipe to 3 feet above the ground surface. The stake shall be marked as whether it is a sanitary or storm side sewer. A magnetic tape shall be placed alongside the 2 x 4.

9.03.5 Testing

Side sewers shall be air tested in accordance with the requirements in Chapter 6.

Chapter 10
TECHNICAL SPECIFICATIONS
FOR WASTEWATER PUMP STATIONS AND FORCE MAINS

Section 10.01 General Provisions

10.01.1	Project Management
10.01.2	Pump Station in-lieu of Gravity Sanitary Sewer
10.01.3	Basic Layout and Sizing Requirements
10.01.4	Design Procedures
10.01.5	Approval of Alternative Methods or Materials
10.01.5	Construction Management/Facility Testing Procedures
10.01.7	Operation and Maintenance Manual
10.01.8	As-Built Drawings
10.01.9	Project Review and Acceptance Process
10.01.10	Performance and Other Assurance Requirements

10.02 Design and Construction Requirements

10.02.1	General
10.02.2	Site
10.02.3	Wetwell, Vaults, and Related
10.02.4	Mechanical
10.02.5	Force Main and Appurtenances
10.02.6	Pump and Motor
10.02.7	Standby Power
10.02.8	Electrical and Instrumentation Control Requirements

Appendix E - Standard Drawings

Drawing No.	Title
1001	Design Data Table
1003	Conceptual Site Schematic
1005	Chain Link Fence and Gate
1007	Force Main Pressure Gauge
1009	Yard Hydrant
1011	Reduced Pressure Backflow Preventer
1070	G00 General Title Sheet
1071	E01 Electrical One-Line Diagram
1072	E02 Electrical Interior Enclosure-01
1073	E03 Electrical Interior Enclosure - 02
1074	E04 Electrical Control Panel Detail
1075	E05 Electrical Sequence Control Diagram
1076	E06 Electrical Pump Control Diagrams
1077	E07 Electrical Enclosure Rainshield Detail
1078	E08 Electrical Intrinsically Safe Example
1079	E09 Electrical Wetwell Level Detail
1080	E10 Electrical Disconnect Air-Gap Junction Box
1081	E11 Electrical Light Pole Detail

Chapter 10

TECHNICAL SPECIFICATIONS FOR PUMP STATIONS AND PRESSURE MAINS

10.01 General Provisions

The technical specifications contained in this chapter, together with Oregon Department of Environmental Quality and U.S. Environmental Protection Agency standards and any other applicable requirements of federal, state and local law shall govern the character and quality of material, equipment, installation and construction procedures for wastewater pump station, force main and other components of pressurized sanitary sewer work. In addition to the provisions within this Chapter, all applicable provisions of this Resolution and Order shall apply. Administrative provisions of Chapter 2 shall apply to the permit process.

10.01.1 Project Management

An Engineer shall be retained to prepare the design, to manage all design and construction activities, to prepare the Operation and Maintenance manual, and to certify that construction was completed in accordance with the approved construction documents. In the event that the Engineer will not be involved in construction, the Engineer shall provide the District and the Oregon DEQ as applicable a project management plan, in writing, and the owner shall notify the District in writing as to who will assume project management responsibilities. The District shall not manage construction activities or assume project management responsibilities. Construction shall not be undertaken by the owner or the construction contractor until the District has approved the project management plan.

10.01.2 Pump Station in lieu of Gravity Sanitary Sewer

A gravity sanitary sewer system shall be constructed to provide sanitary sewer service to all developments, unless otherwise approved by the District. Owner shall make a request, in writing, to the District for a pump station in lieu of a gravity sanitary sewer prior to submitting an application for a site development permit.

10.01.3 Layout and Sizing Requirements

The design shall provide for the complete construction of a wastewater pump station facility including site improvements; pumps; wetwell structure; valve vault(s); force main piping and appurtenances; gravity sewer piping and appurtenances; surge protection; odor control; plumbing; heating, ventilation, and air conditioning (HVAC) system; electrical power; secondary emergency power connection to support full station loads and control systems;

instrumentation and controls; and other associated work identified by the District as being necessary to make the facility fully functional.

The design shall adhere to and address the minimum layout and sizing requirements described below. Each of the layout and sizing requirements shall be specifically addressed in the pump station design report.

a. Pump Station Style/Configuration

Pump stations shall be of the submersible type, unless otherwise approved in writing by the District.

b. Service Area and Population

Service area shall include all land that can be provided with gravity wastewater collection service, either currently or with future sanitary sewer extensions. Service area shall also include basin(s) which discharge via other wastewater pump stations into the subject basin either currently or in the future as identified through District planning or by District staff. The District shall make the final decision on the extent of the service area. Where applicable, service area shall be consistent with District master planning.

The preliminary design memorandum and final design report shall include a service area map that shows the following:

1. Topography of the pump station site at 2' contours.
2, Topography of the service basin.
3. Property boundaries.
4. Existing and planned service areas.
5. District and City Boundaries.
6. Urban Growth Boundary, as applicable.
7. 100-year flood plain line, as applicable.
8. Property zoning.
9. Proposed pump station location and force main alignment.
10. Existing and proposed gravity collection system.

Service population shall be estimated for the entire service area at build-out and for a 25-year period if build-out is forecast to occur beyond 25 years. Initial service population shall also be estimated. Service population shall be calculated in accordance with and consistent with the District's master plan and other applicable jurisdiction's comprehensive plans, with additional input from District staff. For facilities being constructed as part of a new development, service population shall incorporate actual planned densities.

c. Design Wastewater Flows

Wastewater flows shall be calculated for the following conditions:

1. Start-up, 1-year period, 5-year period, 25-year period, and service area build-out Peak Hourly Flow (PHF).
2. Start-up, 1-year period, 5-year period, 25-year period, and service area build-out Average Dry Weather Flow (ADWF).

Flows shall be calculated in accordance with Chapter 4 of these Standards, and shall include domestic, industrial and infiltration and inflow. Final design flows shall be reviewed and approved by the District.

d. Design Period

Wetwell shall be sized to accommodate full build-out within the identified service area contributing to the pump station, unless otherwise approved by the District.

Pumps/motors, force main, and related equipment shall be sized based on the forecast 25-year PHF.

e. Service Life

Electrical/mechanical systems, including but not limited to pumps, motors, and electrical system, shall be designed and specified to provide for a minimum 25-year service life.

Structures and piping shall be designed and specified for a minimum 75-year service life.

The facility shall be capable of accommodating future components that may be needed for projected growth in the service area beyond the identified design period.

f. Hydraulic Analysis

The Engineer shall evaluate and design the pump/force main system and select pump(s) and force main(s) to provide the required capacity and pressure. The Engineer shall develop hydraulic system curves that indicate the required pump operating conditions. System curves shall be developed for pump suction and discharge piping, and shall include all valves, fittings and other items that may cause energy losses. Analysis shall be provided showing the effects of new and old pipe conditions, the net positive suction head requirements, the hydraulic efficiency, the horsepower requirements, the revolutions per minute, and other operating

conditions required for each pump and combination of pumps. Hydraulic system curves shall be developed using the Hazen-Williams equation for "C" factors of 100, 120 and 150, and under high and low wetwell conditions. Hydraulic system curves shall be overlain on the pump curves. Manufacturer pump curves shall be included in the design report. Computer generated curves may also be included.

The Engineer shall provide pump and system curves for the selected pump(s) to the District for review and approval.

g. Wetwell Size

Sufficient operating volume shall be provided in the wetwell to maintain individual pump starts per hour within the requirements stated herein under the "Pump and Motor" sub-section in Section 10.02. Inlet piping shall not be used to provide storage.

h. Receiving System

Engineer shall evaluate the existing downstream sanitary sewer system of the District or City to determine the impact of the increase in flow (e.g. peak pumping capacity) from the proposed pump station. Evaluation shall be performed under the design flow condition for all pumped and gravity connections to the receiving system. Sanitary sewer system shall be evaluated downstream to a point where no surcharging (caused by the increase in flow from the pump station) above the top of the pipe occurs. Hydraulic profile shall be provided in the design report. The District or City reserves the right to require upgrades to the downstream receiving system to mitigate the impact of the increased flow.

i. Hydrogen Sulfide

Engineer shall evaluate hydrogen sulfide potential in accordance with the following guidelines. Hydrogen sulfide controls shall be designed and constructed based on the following:

1. Detention Time less than 35 minutes: No hydrogen sulfide controls required.

2. Detention Time 35 to 90 minutes: Protect the force main discharge manhole with either a protective coating or with a chemical additive in the concrete. Products shall be approved by the District.

3. Detention Time greater than 90 minutes: Install an active hydrogen sulfide control system.

The detention time shall be calculated as the force main volume divided by the estimated average dry weather flow (ADWF) at the 1-year period after pump station startup.

For pump stations discharging into existing force mains, evaluate existing force main discharge manhole for corrosion per the DEQ guidelines.

j. Reliability/Redundancy

Pumping facilities shall be designed and constructed to meet EPA Class I reliability requirements, which includes pump redundancy, standby power provisions, and a telemetry/SCADA system.

Firm pumping capacity shall be provided. Firm pumping capacity is defined as the ability to discharge the design PHF with the largest unit out of service.

Pumping facilities shall be equipped with a backup control system, which shall operate the entire pump station in the event the primary control system fails. Backup control system shall include water level monitoring device(s) and pump control system(s).

Standby power and telemetry/SCADA systems shall be provided per these Standards.

k. Parcel Size

A standard pump station site requires a minimum of approximately 2000 square feet of land area on a 50' by 40' lot. The minimum parcel size shall be based on the need to provide turn-around and parking for maintenance equipment; accommodate all the pump station structure(s), support enclosures, substructure(s), perimeter site buffer; and be in compliance with all development standards, building code requirements and local jurisdiction planning requirements. Turn-around shall be defined as providing sufficient room for the District's pump station O&M crew vehicle to maneuver within the fenced area. Turn-around shall be designed based on a minimum 60 foot vehicle turning radius, and with no more than four (4) turning maneuvers required to turn the vehicle 180 degrees. The entire pump station site shall be fenced as specified herein. A 15-foot wide buffer shall be provided around the pump station fenced area. Parcel size shall also be large enough to provide for future pump station expansion, within the Design Period/Service Life. See Section 10.02.

l. Parcel Zoning and Other Land Use Requirements

Land use designation for the pump station site shall be consistent with the local jurisdiction's requirements for this type of facility. Site and design shall comply with this Resolution and Order, all relevant land use requirements, and all other applicable local/State/Federal rules and regulations.

m. Parcel Ownership

Pump station site and access road shall be dedicated to the District in the form of a permanent easement, as approved, or transferred into direct ownership. All easements or parcel ownership transfers shall be finalized prior to pump station start-up and acceptance by the District.

n. Storm and Surface Water Management

Storm and surface water runoff from the pump station site, including the access road, shall be managed in accordance with District and all other applicable standards.

10.01.4 Design Procedures

a. General

The Engineer shall provide the following minimum scope of work for wastewater pump station and force main designs. The District may modify and supplement this scope of work to more specifically fit the project.

For projects that involve both a new pump station and force main, they shall be designed together and included in the same construction documents. Construction shall also occur concurrently.

The Engineer shall manage all aspects of the project design and construction process, including all plan review and permitting processes. For any plan review processes beyond the District's including, but not limited to, the Oregon Department of Environmental Quality (DEQ) plan review process, the Engineer shall provide the District with resulting review comments, and shall be responsible for facilitating resolution of any conflicts. The District's final plan approval shall not occur until final approval has been received by the Engineer from all other applicable jurisdictions or regulatory agencies.

b. Project Design Submittals

Project design submittals, including the design report, construction plans, and technical specifications, shall be made to the District at the following intervals:

1. 35% completion
2. 60% completion
3. 90% completion
4. 100% completion

c. Project Review Meetings

1. Kick-off Meeting: Prior to the commencement of design and/or construction of any wastewater pump station and/or force main, the Engineer shall contact the District's Treatment Plant Services group to arrange a project kick-off meeting to discuss and review design and equipment requirements. A District project coordinator will be assigned as staff liaison to the Engineer. The District may also form a staff committee to work closely with the Engineer and District project coordinator during the life of the project. The Engineer, after completing the project kick-off, may proceed with the design of the project.

2. Project Review Meetings: Following the project kick-off meeting, the Engineer shall, at a minimum, meet with the District to review the documents and receive comments following District review of each submittal.

3. O&M Staff Meeting: The Engineer shall also meet with District pump station operations and maintenance staff to tour and inspect applicable existing pump stations to become familiar with District requirements and to clarify and confirm specific pump station design requirements.

Agendas and meeting minutes shall be prepared by the Engineer for all project-related meetings. Meetings shall be scheduled at least ten business days in advance. Agendas and supporting information shall be distributed by the Engineer to all invited attendees at least two business days in advance of any meeting. Meeting minutes shall be distributed to meeting attendees and other interested parties within five business days of the meeting date.

d. Design

The Engineer shall perform the following minimum preliminary design tasks:

1. Review applicable District master plans and design reports.
2. Coordinate with District to finalize the site selection.
3. Coordinate with District to finalize the service area, design population, and design flows.
4. Coordinate with District to confirm downstream receiving system capacity, and to address any hydrogen sulfide control requirements.
5. Perform design surveys.
6. Perform geotechnical investigation work. Develop at least two bore holes where the proposed pump station wetwell will be located, and determine appropriate soil design requirements. Also identify any potential landslide conditions.

The Engineer shall, at a minimum, include the following items with the 35% review submittal:

1. Schematic site design, gravity sanitary sewer connection(s), and force main layout.
2. Preliminary wetwell buoyancy calculations.
3. Preliminary design report. Report shall address how the project responds to the Layout and Sizing requirements specified herein. Report shall also identify all permitting requirements.

Following District review and concurrence with the 35% submittal, the Engineer shall proceed with the design. The Engineer shall perform the following minimum design tasks:

1. Prepare a Final Design Report, consistent with the District and DEQ guidelines.
2. Prepare final construction contract documents, including but not limited to construction drawings and technical specifications.
3. Prepare estimates of construction cost.
4. Submit documents and cost estimate at the scheduled milestones to the District.

e. Project Construction Documents

Construction drawings shall include, but not be limited to, the following as deemed applicable by the District and the Engineer:

1. Cover sheet
2. Legend, Symbols and Abbreviations
3. Location and Vicinity Map
4. Pump Station Design Data (see sample table in Appendix)
5. Demolition Plan
6. Site Layout, Grading, Drainage, and Paving Plan
7. Site Utilities, Plans, Profiles, and Details
8. Landscaping
9. Exterior Elevations, Sections, and Details
10. Foundation Plans, Sections, and Details
11. Structure(s) Floor Plans, Sections, and Details
12. Architectural/Civil Framing and Roof Plans, Sections, and Details
13. Door and Window Schedules
14. Mechanical Pump and Piping Plans, Sections, and Details
15. Temporary Pumping Plan
16. Piping Schematics
17. HVAC
18. Electrical Site Plan and Power Plan
19. Power Distribution One-Line Diagram(s)
20. Lighting Plan(s)
21. Electrical Enclosures - One-Line Diagram(s) and Elevation Layouts
22. Miscellaneous Devices/Panels One-Line Diagram(s)
23. Panel Schedule(s) and Layout(s); Circuit Schedule(s)
24. Instrumentation Plan
25. Process and Instrumentation Diagram

Technical specifications shall be prepared to supplement and clarify the construction drawings and these Standards.

10.01.5 Approval of Alternative Methods or Materials

See Section 1.17, Approval of Alternative Methods or Materials, of this Resolution and Order.

10.01.6 Construction Management/Facility Testing Procedures

a. General Roles and Responsibilities

General roles and responsibilities during construction shall be as follows:

1. Contractor shall coordinate directly with the Engineer on all construction issues, including interpretation of contract documents.

2. Engineer shall contact the District regarding any interpretation of Standards and other related District requirements.

3. Engineer shall contact and review with the District any proposed changes to the approved documents. For any change to the approved documents, Engineer shall submit a "Field Revision Form" to the District for approval.

4. District will perform periodic construction observation to verify that work is being performed in accordance with the approved documents. District inspector will not have the authority to approve any aspects of construction activities, nor authorize any changes or modifications.

b. Submittal Reviews

Engineer shall be responsible for obtaining and reviewing contractor submittals to verify that proposed materials and equipment meet the specifications. Furthermore, Engineer shall forward the following submittals to the District for review:

1. Pumps and motors
2. Valves
3. Flow meter
4. Pipe supports
5. Control panel layout
6. Control logic diagrams
7. Generator unit

Engineer shall also forward to the District all requested substitutions to the approved documents, for review.

c. Pre-Construction Conference

Engineer shall facilitate and attend a pre-construction conference meeting with the District, the contractor, the owner, and other interested parties to review roles and responsibilities and to answer questions about the plans and specifications. Engineer shall prepare meeting agenda and provide the District with meeting minutes. Meeting shall be scheduled at least ten business days in advance.

d. Construction Inspection and Meetings

Engineer shall periodically inspect the construction to confirm that the work is being performed in accordance with the approved plans, and to remedy any problems. Engineer shall also meet bi-weekly with the District on site to review construction progress.

e. Construction Check Points

At a minimum, the District will inspect the following items prior to contractor proceeding with work. Engineer shall provide the District a minimum of two business days notice that the subject work will be completed and ready for inspection. Engineer shall be on site to participate in these inspections. Contractor shall not cover or otherwise obscure these work items until inspected by the District.

1. Wetwell Excavation/Base Rock - inspect prior to setting structure; verify compaction.
2. Vault Excavation/Base Rock - inspect prior to setting structure; verify compaction.
3. Piping connections between all structures and the force main - inspect prior to backfilling.
4. Base slabs for generator, electrical and other enclosures - inspect base rock, and verify compaction.
5. Pump base elbow anchor bolts - concurrent with structural testing as specified in Section 10.02.6(e).
6. Factory test of the pump station control panel.
7. Generator test.

District inspection of these and any other items does not relieve the Contractor or owner of responsibility for a complete and operating system.

Copies of compaction test results shall also be provided to the District.

f. Start-up

Engineer shall prepare start-up procedures, final testing procedures, and operational acceptance requirements. A copy shall be provided for District review a minimum of 7 days prior to start-up. Engineer shall coordinate with contractor to test all facility operations prior to performing the formal testing with District staff. Upon completion of the construction and the independent performance testing, the Engineer shall arrange a meeting with the District, Engineer and contractor for formal start-up and testing. Prior to such meeting, Engineer shall notify the District in writing that the pump station has been tested and operates in accordance with the construction document requirements. Engineer shall also be on site to

inspect the formal pump station start-up testing. The contractor shall be required to perform start-up of the new facilities. The equipment manufacturer's representative shall also be on site during all inspection and testing. The representative shall check the installation and supervise start-up. District staff will not operate any aspect of the facility during start-up.

All equipment shall be tested in accordance with the manufacturer's recommendations and as specified or required herein.

The Engineer shall obtain and provide to the District written certification from the manufacturer's representative that the installation is correct and that the equipment has operated satisfactorily.

g. Warranties

The Engineer shall obtain and provide to the District a copy of the manufacturers' warranties for all equipment. These shall be included in the O&M manual.

h. Training

The Engineer and manufacturer's representative shall train the District's personnel in the proper operation and maintenance of the pump station and equipment. The District may videotape the training.

i. Punch List

Following construction and start-up testing, Engineer and District shall develop a punch list of items to be completed or repaired. Contractor shall be responsible for correcting all identified punch list items. Engineer shall provide written confirmation that the work is completed.

j. Project Completion

The Engineer shall obtain and provide to the District a copy of the start-up report as prepared by the manufacturer's representative. The Engineer shall provide certification to the DEQ that all construction was completed per the approved plans and specifications.

10.01.7 Operation and Maintenance Manual

The Engineer shall prepare an Operation and Maintenance manual in accordance District requirements. The manual shall constitute no less than two separate volumes. Volume 1 shall address the fundamental O&M procedures specific to the new pump station. Volume 2 shall provide the equipment

manufacturer's O&M literature specific to the pump station. The District will provide an electronic copy (Microsoft Word format) of the District's standard format for Volume 1. Engineer shall supplement with project specific information.

Specific information that shall be provided in the O&M manual shall include, but not be limited to, the following:

a. Electrical and control diagrams based on as-constructed conditions. Diagrams shall show the wire colors and numbers, coordinated with the field installation.
b. Calibration sheets for all calibrated equipment, including model number and serial number of the equipment.
c. Hard copy of all programming, including (as applicable) auto dialer, soft start/VFD, flow meter, and pump station level controller.
d. Hard copy of the generator test results.
e. Vendor list and contact information for all supplied equipment.
f. Complete set of reduced size record drawings.

The Engineer shall adhere to the following O&M Manual submittal process:

a. Draft O&M Manual - A draft O&M manual, Volume 1, shall be submitted to the District and the DEQ for review no later than eight (8) weeks prior to pump station start-up. Formatting and attachments shall meet District and DEQ requirements. A 90% version, including both Volumes 1 and 2, shall be submitted to the District for review two (2) weeks prior to pump station start-up.
b. Final O&M Manual - The final Volume 2 O&M manual, incorporating all District review comments, shall be submitted to the District prior to pump station start-up. Pump station start-up testing shall not proceed without the Volume 2 manual being complete. The final Volume 1 O&M manual shall be updated to address District review comments and to incorporate start-up records, and shall be submitted no later than two (2) weeks following pump station start-up.

10.01.8 As-Built Drawings

For the purposes of this section, as-built drawings will also mean drawings of record, record drawings, or terms indicative of an attempt to record the as-constructed state of the facility.

Following completion of construction, the Engineer shall submit as-built drawings. As-built drawings shall describe any and all revisions to the previously approved construction plans, and shall be accompanied by a certification letter from the Engineer, indicating that the as-built drawings have been reviewed and revised as necessary, to accurately show all known as

constructed details, and that the improvements have been completed in accordance with the District Standards to the best of his/her knowledge. The words "As-Built Drawing" or "Record Drawing" shall appear as the last entry in the revision block along with the month, day, and year the as-built drawing was prepared.

One complete full-size draft set on paper shall be submitted first for checking by District staff. Submission of as-built drawings shall be made within two (2) weeks of acceptance of facilities by the District.

After making changes prompted by District review of the draft paper copy, final As-Built Drawings shall be submitted. All plans shall be prepared using Computer Aided Drafting (CAD), and the final submittal shall include the following:

a. An AutoCAD compatible digital form (DWG Format) of the as-built drawings (version per District requirements).
b. Basic layering scheme.
c. Standard symbols for appurtenances.

10.01.9 Project Review and Acceptance Process

Key aspects of the Project Review and Acceptance Process are as follows:

a. Request for Pump Station Installation

Owner must first submit a written request to District for permission to install a wastewater pump station in lieu of a gravity sewer.

b. Gain Approval to Construct Pump Station

District will determine the need for a pump station. If District determines that a proposed pump station is an acceptable alternative to a gravity sewer, District will grant permission to proceed with pump station design.

c. Number of Copies

Unless otherwise noted, for all project submittals, submit six (6) copies to the District.

d. Treatment Plant Services Design Review

Pump station/force main design and construction documents shall first be reviewed and approved by Treatment Plant Services (TPS). All submittals shall be delivered to TPS. Upon approval by TPS, the approved construction documents shall be submitted to Development Services.

Development Services will perform a final review of the documents and issue the required construction permits.

e. Coordination with Development Services Reviews

Engineer shall coordinate with Development Services reviews to satisfy requirements associated with the gravity sanitary sewer and additional site layout requirements.

f. DEQ Plan Review

Concurrent with final Development Services review, the owner shall submit final TPS approved plans and specifications to the Oregon Department of Environmental Quality (DEQ) for review. A copy of the DEQ approval shall be submitted to the District before final design approval is issued.

g. Final Design Approval

Upon final District and DEQ reviews and approvals and receipt of appropriate review fees (including separate payment to DEQ for their review fees), Development Services will issue final design approval and the required construction permits. Following issuance of the construction permits, two (2) sets of construction documents will be returned to the Engineer for use during construction. The construction contractor shall at all times use approved plans during construction, and shall maintain such on site.

h. As-built Drawings

Submit one (1) complete set of both paper and electronic as-built drawings.

i. Operation and Maintenance Manual

Submit draft copies to District and DEQ for review. Submit six (6) copies of the final manual. Pump station start-up shall not proceed if the O&M manual submittals are not complete. District will submit final approved copy of Volume 1 to DEQ.

j. Project Acceptance

The pump station can be placed into operation and the District will assume facility operations after all start-up, testing, punch list, O&M manual, and maintenance assurance requirements have been completely satisfied. The

pump station shall not be placed into operation until all these requirements have been addressed, including completion of all punch list items.

k. Timing for Project Reviews

The Treatment Plant Services' review process is separate and independent from the Development Services processes, including those related to public/private sanitary sewer improvements. Development Services' pump station/force main plan review timing will not start until the TPS review process is complete. Upon acceptance of the complete submittals as described in these Standards, TPS will endeavor to approve, return for revision, or reject the documents within 10 working days. Reviewed submittals will be returned to the Engineer, with comments and/or revisions to the documents shown in red.

For construction submittals/substitution requests, the District will endeavor to approve, return for revision, or reject the submittal within 10 working days.

10.01.10 Performance and Other Assurance Requirements

Project performance assurance, "as-built" assurance and maintenance assurance shall be provided as required in Chapters 1 and 2 of these Standards. As specified in Chapter 2, construction punch list generated for the pump station and force main shall be completed prior to release of performance assurance. Treatment Plant Services staff will prepare the construction punch list, following successful pump station start-up.

10.02 Design and Construction Requirements

10.02.1 General

The following requirements are the minimum for the design and construction of wastewater pump stations and force mains. The Engineer shall prepare the design to conform to these requirements and any additional project specific requirements identified during the Project Kick-off meeting and subsequent District reviews. In addition, the design and construction shall comply with all other District standards, as applicable and as referenced herein. In the event of conflicts, these Chapter 10 Standards shall govern.

In general, these Design and Construction Standards require a complete submersible sewage pumping system, equipped with a minimum of two submersible sewage pumps installed in a concrete wetwell. The pumps shall discharge into a sewage force main that empties into a gravity sanitary sewer pipeline. Equipment redundancy shall be provided, unless otherwise specifically noted. The pumping system shall be operated with a fully

independent and automatic control system. Sufficient valves and a flow meter, installed in concrete vaults, shall be provided on the force main. The pump station shall be constructed on a parcel of sufficient size to allow for all required District operations, and the site shall be accessible under any weather condition by District vehicles. The pump station site shall be protected from flooding, and shall be fenced. The pump station shall be provided with all required public and private utility services.

10.02.2 Site

a. Flood Plain

The entire pump station site and access to the site shall be no less than two (2) feet above the 100-year flood plain level. Mapping shall be provided to verify that this requirement has been met.

b. Clearances/Setbacks

Clearances/setbacks from all equipment and structures shall be in accordance with applicable codes, including but not limited to building and electrical codes. Minimum clearances shall be 42 inches in front of all electrical control panels, and 48 inches around the standby generator. Sufficient clearances shall be maintained within the fenced site for access to and ease of equipment maintenance. Setbacks shall also be maintained consistent with local planning requirements.

c. Drainage

Surface water around the perimeter of the site shall be directed away from the pump station. Floors shall be sloped to prevent ponding and to direct water to drains and sumps. All on-site drainage shall drain off the pump station site to an approved point of disposal. Catch basins, if required, shall be Lynch-style, trapped, and minimum four square feet open area. Drainage provisions shall be in compliance with District standards for water quality and erosion control and with all local building codes.

Provisions shall be constructed to prevent flooding of below grade structures. Footing/subsurface drains shall be installed where such drains can be daylighted. See also Section 10.02.3.

d. Access

A minimum twenty (20) foot wide right-of-way and minimum fifteen (15) foot wide asphalt surfaced access road shall be provided for access to the pump station site. Access roads longer than 50 feet shall include at least one turn-around outside the fenced area. Turn-around shall be of

sufficient size for the District's pump station O&M crew vehicle. Turn-around shall be designed based on a minimum 60 foot vehicle turning radius, and with no more than two (2) turning maneuvers required to turn the vehicle 180 degrees. Road grades shall not exceed ten (10) percent. No private gates will be permitted across the access road. Access road shall be designed to provide safe entrance/exit and stopping areas, in accordance with standard road design guidelines.

Within the pump station site, access shall be provided to all structures/equipment for the District's equipment maintenance vehicles.

Access shall also be provided around the entire fenced site to perform required maintenance (see also Parcel Size requirements in Section 10.01).

e. Fencing/Security

The pump station site, including all equipment and structures, shall be enclosed by a six-foot high fence with access gate. Fencing may consist of chain link with obscuring material inserted into the weave of the fence, or it may consist of decorative split face concrete masonry units. Chain link fence shall be 2-inch mesh, 9-gauge copper bearing steel wire, with minimum 15-mil PVC coating. Fence installation shall maintain sufficient clearance from the station and associated structures such that maintenance operations can be accomplished without removal of the fence. See also Clearances/Setbacks.

Access gates shall be rolling or swinging. Swinging gates shall be placed such that both panels can be fully opened to allow entry into the pump station. Gate opening shall be a minimum 15 feet. As applicable, the gate shall be installed to allow a maintenance vehicle to be pulled completely off the public roadway prior to unlocking the gate. Access gates shall allow for padlocking, but security wire and inclined brackets at the fence top shall not be required except in special situations. Gate stops shall be provided for swinging gates.

f. Paving

Access road and entire pump station site shall be surfaced with 8-inches of 3/4 inch minus crushed rock overlain by a 1-1/2 inch thick lift of Class 'B' asphaltic concrete and a 1-1/2 inch thick lift of Class 'C' asphaltic concrete. Compact the crushed rock to 95% maximum dry density in accordance with AASHTO T-99. Compact the asphalt to 92% maximum density in accordance with AASHTO T238 (Method A or B). Place the crushed rock on compacted subgrade. Install geosynthetic fabric on top of compacted subgrade for the full width/length of the access road and within

the pump station site. Perform minimum two compaction tests for both the base rock and asphalt surface.

g. Landscaping

Landscaping shall be provided as required by the development's Land Use Permit. In general, it should be designed to blend-in with surroundings and require little regular maintenance, and be drought resistant to eliminate the need for an automatic irrigation system. Shrubs and/or bushes with thorns shall not be allowed.

h. Lighting

Area lighting shall be provided in accordance with the Electrical requirements as specified herein.

i. Site Sign

District will provide a sign. Sign shall be securely mounted to the fence gate, unless otherwise specified or required by the District.

10.02.3 Wetwell, Vaults, and Related

a. General

1. Applicable Building Codes - Structures shall be designed and constructed consistent with the seismic zone and applicable requirements as specified in the Oregon Structural Specialty Code (OSSC).

2. Testing - Special inspections and/or testing shall be performed on all cast-in-place concrete, anchors, and other structural items as specified in the OSSC.

3. Structural base fill shall consist of 3/4-inch minus crushed rock, compacted to 95% maximum dry density in accordance with AASHTO T-99. Total thickness shall be a minimum of 12 inches. Design shall also incorporate recommendations from the geotechnical investigations. Backfill shall be 3/4-inch minus crushed rock, compacted to 95% maximum dry density in accordance with AASHTO T-99. Backfill shall not be placed against forms or temporary construction materials, or over any debris material. Backfill shall not be placed against poured concrete until 28 days have passed from completion of original concrete pour. Compaction within 5 feet of the walls shall be accomplished using hand operated vibratory plate compactors or

tamping units. Particular care must be taken to avoid damage to the pipe connections and to the structure.

b. Wetwell (see also Chapter 6 of these Standards)

1. Configuration - The wetwell shall be a circular configuration, with consistent diameter throughout. The floor shall be sloped for proper installation and function of the pump inlets. The wetwell shall be designed to minimize the potential for vortexing, rag and debris build-up, and other possible inlet problems. Pump inlets shall be designed at a distance of 0.3D to 0.5D above the wetwell floor (where D is the diameter of the inlet), but not less than 3 inches. Sump bottom shall be grouted to provide inclined surfaces (60-degree angle to horizontal) to direct solids to the pump inlets. Wetwell shall have one common sump; no split sumps or any barriers shall be installed between pump inlets.

2. Finished Grade Elevation - Wetwell lid shall be a minimum 2 inches above finished grade, to prevent surface water from draining over the lid and into the wetwell.

3. Materials of Construction - Structure shall preferably be precast. Precast concrete wetwells shall meet the standards in Chapter 6 of the District's Standards. Floor slab shall be a minimum 12 inches thick. Top slab shall be designed for H20 loading. Joints shall be watertight, sealed with rubber ring per ASTM C 443 or mastic gaskets. Joints shall be grouted inside and outside with high strength, non-shrink grout (see also Chapter 6). No lift holes shall be allowed. Alternative lifting mechanisms shall be designed into the structure.

4. Explosion Resistance - All equipment and fixtures installed in the wetwell shall be explosion proof rated in accordance with the applicable electrical codes and as specified herein.

5. Sanitary Sewer Inlet Piping/Isolation - Only one sanitary sewer inlet into the wetwell shall be allowed. Connection shall be flexible, in accordance with Chapter 6 of these Standards. Penetration shall be pre-cast into structure; field constructed penetrations shall not be allowed. No wetwell penetrations shall be made within 6 inches of a wetwell joint. Inside/outside drops shall not be allowed. A pipe joint shall be provided within 12 inches of the wetwell. Inlet discharge shall be above the normal pump operating levels, while minimizing the vertical drop to prevent air entrainment conditions. Inlet piping shall be designed

to avoid vortexing and cavitation. The design shall provide for the isolation of the wetwell, to allow for maintenance.

6. Force Main and Other Pipe Penetrations - Penetrations for the force mains, vault drains, and other required connections shall be pre-cast into structure; field constructed penetrations shall not be allowed. Such pipe penetrations shall be sealed with link seal type seals. For pipe sizes too small for link seals, seal with epoxy sealant.

7. Operating Levels - Inlet piping shall not be used for storage. 'Pumps off' level shall be established to prevent vortexing, and also to provide motor cooling as required by the motor specified. See also pump and motor design requirements and Instrumentation and Control section for additional requirements.

8. Installation - The construction installation method shall be specified and shown on the construction drawings. For any proposed special installation procedures, such as caisson construction, sufficient detail shall be provided for District review.

9. Testing - Perform hydrostatic test in accordance with District standards for manholes.

c. Vaults

1. Size - Vaults shall be no deeper than five feet (5'-0") from the rim to the vault floor. Minimum 12-inch spacing shall be provided between all piping and vault walls/floor, and between vault walls and flanges. Vault shall be large enough to allow for a worker to enter and perform routine maintenance.

2. Finished Grade Elevation - Vault lids shall be a minimum 2 inches above finished grade, to prevent surface water from draining over the lid and into the vaults.

3. Materials of Construction - Vaults shall be constructed of precast concrete, unless otherwise approved by the District. Vaults shall comply with the requirements of ACI 318-99. Concrete shall have minimum 4000 psi, 28 day compressive strength. Joints shall be keyed and shall be provided with a watertight gasket.

4. Construction - Vaults may be formed with separate top and bottom slabs. Walls shall be cast so that all sides are continuous at corners and their full length with no blockouts or knockouts. All pipe

penetrations shall be pre-formed or core drilled at the required locations.

5. Pipe Penetrations - Seal all wall pipe penetrations with link seal type seal. For pipe sizes too small for link seals, seal with epoxy sealant.

6. Drain - Vault shall gravity drain to the wetwell. Sump pump shall not be allowed. Drain pipe shall be minimum 2-inch diameter. A maintenance-accessible flap valve shall be provided at the discharge end. A P-trap, primed continuously through a connection to the on-site water supply shall be provided as follows. Extend minimum 3/4-inch diameter water line into the vault, terminating at a non-freeze hose bib mounted on the vault wall. Install 1/4-inch tee and ball valve, and extend 1/4-inch diameter copper tubing to the vault drain to serve as the priming supply. Secure all piping to the vault with stainless steel hardware.

7. Testing - Perform hydrostatic tests in accordance with District Standards for manholes.

d. Force Main Discharge Manhole

Discharge manhole shall comply with the District's standards for sanitary sewer collection systems. When required herein under hydrogen sulfide management requirements, discharge manholes shall be coated with a District approved protective coating or chemical additive in the concrete.

e. Access

Wetwell and vault access shall be provided through a minimum double door, 3-foot square opening. Door shall be aluminum, diamond plated, H20 rated, and spring assisted. Door shall be provided with a recessed padlock clip for locking with a standard padlock.

Wetwell access hatch shall be provided with fall prevention system described herein and vault access hatches shall be provided with perimeter drain channels, which shall discharge to daylight through minimum 1-inch diameter pipes at the perimeter of the concrete lid.

f. Fall Prevention Equipment/Personnel Removal System

Wetwell and vaults shall be designed to conform to Oregon-OSHA requirements. Design shall also comply with District safety standards for personnel entry/removal. Railings, safety grates, or other approved and acceptable systems shall be provided. For wetwells, a grated fall

prevention system integral with the access hatch system shall be provided that meets the following minimum specifications:

1. Provides complete coverage of the wetwell opening when access hatch has been opened.
2. Design allows for visual inspection of the wetwell without opening the fall prevention system.
3. Grating shall be of aluminum construction, with epoxy powder coating, color orange.
4. All stainless steel hardware.
5. 300 psf pedestrian rated.
6. Opens separately from the access hatch. Access hatch must be opened first.
7. Installs and operates without interfering with the pump guide rails. Does not interfere with pump removal.

System shall be the Aluminum Safe Hatch, as manufactured by Syracuse Castings, or equal.

g. Ladders and Miscellaneous Hardware

Access ladders shall not be installed in the wetwell. Ladders shall be provided in vault(s), with recessed extension that extends no less than 3 feet above grade. Ladders shall be constructed of aluminum. Miscellaneous hardware, including anchor bolts, installed in all structures shall be Type 316 stainless steel.

h. Buoyancy

Engineer shall evaluate the buoyancy potential for all buried structures. Engineer shall perform evaluations assuming ground water level at ground surface, and for the wetwell assume that the water level is at "pumps off." Factor of safety against buoyancy shall be a minimum of 1.25 under gravity conditions.

10.02.4 Mechanical

a. Heating and Ventilation

Wetwell and vaults shall be passively ventilated. Electrical equipment within these structures shall be designed to comply with the National Fire Protection Association (NFPA) 820 requirements and the applicable electrical code for this ventilation condition. For the wetwell, passive ventilation through the access hatch alone shall not be sufficient. Vent(s) shall be installed so as not to interfere with vehicular or pedestrian activity related to accessing and maintaining the pump station facility. Above

grade vent pipe shall be Schedule 80 galvanized pipe, protected with a non-corrosive wire mesh screen at the end of the pipe to prevent the entrance of birds, rodents and other small animals. See also the District's Electrical and Instrumentation/Control requirements elsewhere in these Standards for the design of electrical components inside these structures.

Heating and ventilation shall be provided for all electrical and control panels, in accordance with the requirements herein under the "Electrical and Instrumentation/Control Requirements."

b. Plumbing

1. Drainage - Vault drain piping material shall be in accordance with the Uniform Plumbing Code. Site drainage piping material shall be as required for the depth of bury and traffic loading condition. For PVC piping, glue system shall be two-part, including primer and glue. "One Step" systems shall not be allowed.

2. Water Supply - On site potable water supply shall be provided through a metered 1-inch water supply connection to the municipal water supply, with a backflow preventer and a 1-inch yard hydrant. Water piping shall be copper. Yard hydrants in exposed locations subject to freezing shall be of the non-freeze type. Yard hydrant shall be located out of the way of traffic, and shall be secured to and protected by 4-inch diameter galvanized steel bollard filled with concrete.

3. Backflow Prevention - A Conbraco model 40205A2 (1-inch diameter) reduced pressure backflow device shall be installed on the potable water piping entering the pump station site and upstream of any service connections. This device must also be approved by the Oregon State Health Division. Double check valve assemblies are not acceptable. Backflow device shall be installed above grade in a fiberglass enclosure. Above-ground water pipe shall be provided with PVC jacketed insulation and thermostat-controlled heat tape. Power supply to the enclosure shall be provided through a dedicated circuit breaker.

4. Plumbing shall be tested in accordance with Uniform Plumbing Code requirements. Copy of certified test results for backflow prevention device shall be provided.

c. Hydrogen Sulfide Control System

Where an active hydrogen sulfide control system is required by these Standards, system type shall be as directed by the District and design shall

be approved by the District and comply with DEQ guidelines. Systems shall be designed to maintain the dissolved sulfide content of the pumped sewage below 0.1 milligrams per liter at the point of discharge into the gravity sewer manhole.

10.02.5 Force Main and Appurtenances

a. General

Engineer shall design the force main and appurtenances in accordance with American Water Works Association (AWWA) requirements. Minimum force main size shall be four (4) inches in diameter. Design force main velocity shall be 3.5 to 8.0 feet per second. Force main shall be designed to continuously ascend from the pump station to its discharge location, unless otherwise approved by the District. Alignment shall minimize distance from pump station to discharge manhole. Force main shall be installed inside a public right-of-way or permanent easement dedicated to the District (minimum 15 feet wide). Horizontal bends shall be minimized. Use two-45 degree bends in lieu of 90-degree bends. The system shall be designed to allow for the easy removal of pumps, check valves, and flow meter while maintaining the facility in continuous operation.

b. Force Main Pipe and Fittings

All force main piping shall be of the same diameter. Force main piping in the wetwell and through all vaults shall be cement lined, minimum thickness class 53 ductile iron pipe conforming to AWWA C151, without exception. Buried pipe between the vaults and discharge manhole may be cement lined, minimum thickness class 52 ductile iron pipe or polyvinyl chloride (PVC). PVC pipe shall meet AWWA C900, Class 200 (less than or equal to 12 inch diameter) or C905, Class 235 (greater than 12 inch diameter) standards. PVC pipe joints shall meet ASTM D3139 and F477 standards. Fittings shall be factory fabricated cement lined ductile iron, minimum 250 psi rated. Merging of the pump discharge manifold into a common force main shall be made using a 'wye'. Buried joints shall be push-on or mechanical. Flanged buried joints shall not be allowed. Exposed joints shall be flanged. For vertically oriented flanged pipe (e.g. inside the wetwell), piping shall be installed with permanent flanges located on the lower end at all times. Field installed flanges shall only be allowed on the upper end of vertical pipe sections. Joint restraint shall be accomplished mechanically or with concrete thrust blocks. Flexible, restrained connections shall be made outside and within 12 inches of each structure.

Copper toning wire (12 gauge, green) and locate tape shall be installed with all buried force main piping. Toning wire shall be terminated at valve boxes every 500 feet along the force main alignment, or as otherwise required by the District. Toning wire shall also extend from the force main to all air/vacuum valves. Locate tape shall be 4 inches wide, with "WARNING-SANITARY SEWER PIPELINE" or similar printed in large letters on the tape. Toning wire shall be installed on top of the force main; locate tape shall be installed 12 inches above the force main.

Installation of force main and appurtenances shall conform to Chapters 5 and 6 of these Standards, AWWA C600 for ductile iron pipe installation, and AWWA C605 for PVC pipe installation.

c. Check Valves

Each pump discharge shall be fitted with an AWWA C508 check valve installed inside a valve vault. Check valves shall be swing check-type with external arm and spring using metal bushings, mounted in the horizontal position, with flanged end connections. Valves shall be of cast/ductile iron construction, with cast/ductile iron disc, stainless steel hinge pin shaft, replaceable body seat ring, and epoxy lining and coating. Check valves shall be provided with valve (with threaded ends) for pressure relief installed in the top plate or inspection cover, with drain tubing to the vault drain. The valve operators and their orientation shall be drawn to scale on the drawings to clearly identify available operating space. Check valves shall not be installed in the wetwell.

d. Isolation Valves

Each pump discharge shall be fitted with an isolation valve, located inside the check valve vault and immediately downstream of the check valve. An isolation valve shall be installed in the common force main downstream of the flow meter. Isolation valves shall also be installed on the common force main, at intervals not to exceed 1/4 mile. Air/vacuum valves shall be installed upstream of each common force main isolation valve.

Isolation valves shall be cast or ductile iron eccentric plug valves, with flanged end connections and with cast/ductile iron plug. Plug valves 4 inches and larger in diameter shall be gear driven. Valves shall have grit seals on both the upper and lower stem journals. Seat area shall be raised, with raised area completely covered with not less than 90% pure nickel weld. Shaft seals shall be of the multiple V-ring type and shall be externally adjustable and repackable without removing the actuator or bonnet from the valve under pressure. Plug valves shall be installed such that the plug opens to the top and the valve seat is located on the pump

side of the valve. Valves in vaults shall have handwheels, with the handwheels operating facing up. Buried valves shall have gear box hermetically sealed and be equipped with 2-inch square AWWA operating nut. The valve operators and their orientation shall be drawn to scale on the drawings to clearly identify available operating space.

e. Air Release Valves

Air relief and air vacuum release, or combination air release and vacuum valves shall be installed at locations along the force main to prevent air from being captured inside the piping, and to allow for draining of the force main. Each such valve shall be sized with the proper orifice size suitable for the volume of air to be admitted or released. Such valves shall be provided with an isolation valve, and with a bleed-off valve at the base. Air release valves shall be stainless steel as manufactured by Vent-o-Mat, without exception. Air release valves shall be installed in a 48-inch diameter concrete manhole with a flat-top lid and 24-inch diameter access cover, all H20 traffic rated.

f. Bypass Connection

Force main shall be provided with a bypass connection at the pump station to allow for temporary bypass pumping and for force main cleaning. The connection shall be located in a vault, downstream of the common force main isolation valve. Connection shall generally be constructed as follows:

1. Connection shall be the same diameter as the force main.
2. Install an in-line wye fitting, rotated vertically.
3. Install a 45-degree bend.
4. Install a plug valve.
5. Install a blind flange on the plug valve, tapped with a 1-inch diameter nipple and gate valve.

g. Force Main Discharge

Force main shall discharge into a manhole at the manhole invert. Force main invert elevation shall not be greater than five feet below ground surface. Where existing sanitary sewer collection system manholes exceed this depth, a separate, dedicated force main discharge manhole shall be provided, with a gravity connection to the sanitary sewer collection system. Where possible, discharge alignment shall be in line with the manhole outlet. Discharge alignment shall not be less than at a 90-degree angle with the outlet.

h. Flow Meter

A flow meter shall be provided on the common force main, either installed in the valve vault or in a separate vault. Flow meter shall be as specified under Electrical and Instrumentation/Control Requirements.

i. Gauges

A pressure gauge shall be installed on each pump discharge, upstream of the check valve. A pressure gauge shall also be installed on the common force main, downstream of the check valves. Gauges shall be 3-1/2-inch diameter with stainless steel case, polycarbonate glass window, stainless steel movement, blowout disc and 1/2-inch NPT stainless steel lower connection. Gauge shall be selected such that the gauge will read from 40 to 70 percent of full scale under normal operating conditions and not exceed 90 percent of full scale under pump curve shut-off condition. Gauges shall be Ashcroft or equal. Gauges shall be mounted to a stainless steel diaphragm seal and filled with glycerin. Gauges and diaphragm seals shall be connected to the force main per the Force Main Pressure Gauge Standard Drawing.

j. Surge Protection

Engineer shall evaluate the pump and force main system to identify the potential for transient pressures or column separation conditions that could damage the pump-force main system. Documentation of the surge analysis shall be included in the design report. Surge protection shall be designed as necessary to avoid a pressure gradient change from positive to negative. Surge protection/column separation prevention measures shall include air cushion check valves, surge anticipation/relief valves, or air relief valves.

k. Supports

Engineer shall size and design pipe supports, as required, for piping in the wetwell and vaults. Supports shall be designed to meet UBC seismic requirements, as applicable, and shall also be designed to resist maximum expected surge. Pipe supports in vaults shall be laid out considering maintenance and removal of valves and the flow meter. Pipe supports in the wetwell shall be designed to minimize horizontal movement of the pipe. In all cases supports shall be provided to prevent transfer of load to flanges, valves, and flow meter.

Supports shall be constructed of 316 stainless steel. Anchors and bolts/nuts shall be minimum Type 316 stainless steel. All concrete anchors shall be epoxy-based.

l. Odor Control System

Engineer shall evaluate the potential for generating odors within the wetwell and at the force main discharge manhole. As required, the Engineer shall size and design an odor control system to minimize or prevent production of odorous compounds. Proposed odor control system shall be reviewed and approved by the District during preliminary design.

m. Painting

Piping and valves in the wetwell and vault(s) shall be painted with epoxy. Prepare and paint in accordance with the Steel Structures Painting Council standards. Paint system shall be applied in minimum three coats, with the first coat being a zinc-based primer. Each paint coat shall be 4 to 6 mils thick. Color shall be as selected by the District.

n. Force Main Testing

Field testing of the force main and appurtenances shall be completed by a hydrostatic test with potable water that meets the following requirements. Contractor shall be responsible for making all necessary provisions for conveying water to the points of use and for disposal of the test water, including temporary taps and plugs.

1. Prior to the start of the hydrostatic test, all trenching shall be backfilled and compacted per the requirements of Chapter 5.

2. When concrete thrust blocks are used, the hydrostatic test shall be conducted at least five days after thrust block installation.

3. Seal pipe ends and secure pipe with temporary thrust restraint, as required, to maintain line and grade and to prevent damage.

4. Furnish all equipment and materials for the test including:

    a) Test pump approved by the District.
    b) Suitable suction and discharge pipes and hoses.
    c) Suitable graduated containers for measuring water loss.
    d) Pressure gages with pressure range at least 20% greater than the required test pressure and with graduations in 2 psi maximum increments. Gages shall have been calibrated within 90 days of the test.

5. Conduct the hydrostatic test so the lowest point along the test section is subjected to a hydrostatic pressure of 150 psi or 1.5 times the operating pressure, whichever is greater.

6. Fill the test section with water and allow it to stand at two-thirds of the test pressure for a minimum of 12 hours. Expel air from the test section. Apply and maintain the test pressure for a minimum duration of two hours and measure the leakage during this period. Operate the test pump as required to maintain the pressure within plus or minus 5 psi of the test pressure throughout the test period.

7. At the conclusion of the test period, operate the pump until the test pressure is obtained. The pump suction shall be in the graduated container so the amount of water required to restore the test pressure is accurately measured.

8. The measured leakage shall not exceed the allowable leakage amount calculated by the following formula:

$$AL = \frac{LD(P)^{1/2}}{133{,}200}$$

where: AL = Allowable Leakage in gallons per hour
L = Length of pipe tested in feet
D = Diameter of pipe (nominal) in inches, and
P = Test Pressure in pounds per square inch

9. If the measured leakage is in excess of the allowable leakage, the section of pipe tested shall be repaired and re-tested until the actual leakage is reduced below the allowable amount.

10. Visible leaks in the wetwell and vaults shall be eliminated regardless of the leakage amount.

10.02.6 Pump and Motor

a. General

1. Materials and equipment shall be standard products of both a manufacturer and distributor regularly engaged in both the manufacture and distribution of such products for at least 2 years, and shall be suitable for the service intended. All materials and equipment shall be new and unused.

2. The pumps shall be supplied by a distributor authorized to service them throughout the warranty period and beyond. The distributor

shall be located within a 50-mile radius of the site, and shall be capable of providing 24-hour, 7-day service.

3. The pumps shall be warranted by the manufacturer for a minimum of two (2) years from the date pump station is placed into operation and accepted by the District.

4. Where two or more pieces of equipment performing the same function are required, they shall be duplicate products of the same manufacturer.

5. Wetted parts shall be compatible and suitable for use with raw wastewater.

6. Nameplates - Equipment shall be fitted with a stainless steel nameplate indicating (as applicable) serial number, rated head and flow, horsepower, impeller size, rotating speed and Manufacturer's name and model number.

7. The entire pump station assembly shall be UL approved as Explosion Proof for operation in a Class 1, Division 1, Group D hazardous location.

b. Compatibility

Pumps and pump station equipment shall be compatible with other District pumping stations, and final equipment selection shall be approved by the District.

c. Solids Handling

Pumps shall be capable of handling and passing minimum 3-inch spherical solids and any trash or stringy material.

d. Pumps

1. The Engineer shall select pump(s) that will operate under the determined hydraulic system curve conditions and at the highest efficiency possible. Selection of pump(s) with flat operating curves (e.g. where a small change in total dynamic head results in a large change in pumped flow) shall be avoided. Pump(s) shall operate in accordance with the manufacturer's recommendations under all operating conditions. The entire pump curve shall be non-overloading.

2. Pumps shall be designed for continuous operating service for pumping raw, unscreened sewage, and constructed to meet the intended service.

3. A minimum of two pumps per station shall be provided.

4. Pumps shall have tandem double mechanical seals. Lower (primary) seal faces shall be silicon-carbide or tungsten-carbide. Metal parts shall be Type 316 or 316L stainless steel. Probes shall be provided between seals to detect moisture and associated seal failure. A seal leak monitoring system shall be provided by the pump manufacturer. System shall monitor probes continuously for seal leakage. Seal leak monitoring system shall be integrated into the Pump Sequence Control Panel, with a discrete alarm light provided on the front of the control panel.

5. Pumps shall have replaceable impeller and volute/impeller wear rings. Wear rings shall be constructed of stainless steel.

6. Impeller shall be of cast/ductile iron construction, non-clog type with pump-out vanes on the back side to reduce pressure on the shaft seal and help eliminate buildup of foreign materials.

7. Pump assembly shall be painted with a zinc-based primer and a water-based air-dried enamel finish coat. Total paint system thickness shall exceed 2.0 mils, with each coat exceeding 1.0 mil minimum thickness.

8. Rotational Direction - All pumps shall have the same rotational direction.

9. Submersible pumps shall not exceed 50 HP. Where a two-pump system would require greater than 50 HP units, three or more units less than or equal to 50 HP shall be installed, with a minimum of two units delivering the design flow rate.

e. Discharge Elbows

Each pump shall include a separate cast iron discharge base elbow, securely mounted to the wetwell floor with stainless steel epoxy anchors and as specified by the manufacturer. Anchor installation shall be tested in accordance with UBC requirements prior to installation of base elbow. Base elbow shall be a reducing diameter type, as necessary, to transition between pump discharge and the full diameter force main. Pump shall be designed to automatically and firmly connect to the discharge connection,

with sealing of the pump unit to the discharge connection accomplished by a machined metal-to-metal watertight contact.

f. Motors

1. Motors shall be Factory Mutual or Underwriter's Laboratories approved. Pump motor shall be induction type with a squirrel cage rotor, shell type design. Motor shall be housed in a sealed, submersible and explosion proof rated, air or oil filled shell. Motor shall be rated for continuous duty either completely dry or fully submerged in the pumped liquid. A minimum 1.15 service factor shall be specified.

2. Motor shall be minimum NEMA design B with minimum Class F insulation. Stator windings shall be of high conductivity copper magnet wire. Heat sensors shall be embedded into the motor windings, and shall be set to open upon exceeding the motor design temperature. The sensors shall be connected to an alarm in the control panel. Upon a thermal overload, control system shall turn off and lock out pump operation until manually reset.

3. Bearings - The pump and motor assembly shall rotate on two bearings. An upper radial bearing and lower thrust bearing shall be required. These shall be heavy-duty single row ball bearings which are permanently lubricated. Bearings requiring lubrication according to a prescribed schedule are not acceptable. The bearings shall be rated at a minimum B-10 bearing life of 50,000 hours at design loads.

4. Motor nameplate horsepower must exceed the maximum required by the pump under all possible operating conditions. Significant motor oversizing, however, shall be avoided.

5. Electric Cables - Motor and sensor cables shall be heavy duty, submersible type rated to 600 volt and 60 degrees C. The power cable and cap assembly shall be designed to prevent moisture from wicking through the cable assembly. Electrical cables shall be of sufficient length to require no splicing between motor and air gap panel.

6. Cable Entry - The cable entry seal shall be designed to insure a watertight and submersible seal. Power and control cable entry into the lead connection chamber shall include elastomer grommets, washers, and epoxy sealed leads. Epoxies, silicones, or other secondary sealing systems alone shall not be considered acceptable.

7. Motor Starting Frequency - Sufficient wetwell operating volume shall be provided such that motor starting frequency and minimum time between motor starts complies with NEMA requirements.

g. Guide Rails

Each pump shall be easily removed and replaced on two, 2-inch diameter stainless steel guide rails without disturbing the discharge piping. Single rail or cable systems shall not be allowed. Pump assembly shall have lower guide rail supports securely fastened to the base elbow. Guide rails shall be secured to the wetwell lid. Intermediate guide rail supports shall be provided as recommended by the pump manufacturer. Guide rail supports shall not interfere with pump removal or re-installation. Pump discharge shall automatically connect to the base elbow when lowered into place. Entire rail system assembly shall be constructed of stainless steel.

h. Lifting Devices

Each pump assembly shall be provided with a stainless steel lifting chain and stainless steel lifting knuckles of adequate strength to support 150% of the entire assembly weight. Chain links shall be minimum 5/16-inch inside diameter and lifting knuckles shall be provided every 3 feet.

i. Pump Removal

On site hoist and crane shall be provided for pump assembly removal, unless the District's truck-mounted lift has sufficient capacity to lift the pump assembly.

j. Testing

1. Prior to startup testing, Contractor shall remove and re-install each pump to verify that removal system functions correctly, and that the pump/base elbow/guide rail system was installed correctly.

   Following successful completion of the startup testing, each pump shall again be removed and re-installed. Each pump shall then be operated to verify that operating conditions at the actual operating point remained constant.

2. Pumps - At a minimum, perform the following tests on each pump:

   a) Startup, check, and operate the pump system over its entire range. Perform vibration analysis as applicable. Vibration

analysis shall be within the amplitude limits specified and recommended by the Hydraulic Institute Standards.

b) Measure and record the shutoff head and power draw at shutoff head.

c) Measure and record flow rate, operating head and power draw at actual operating point and at two partially throttled conditions.

d) Measure and record static head.

Verify that each pump is operating in accordance with its pump curve and as designed. Coordinate with pump manufacturer's representative and contractor to correct any problems. Pump station shall not be accepted until design pump capacity has been demonstrated.

For all pump tests, ensure that the force main is full of liquid during the testing. The facility shall be tested using potable water, unless otherwise approved in writing by the District.

The Engineer shall obtain and provide to the District written certification from the manufacturer's representative that the installation is correct and that the equipment has operated satisfactorily.

3. Motors - Simulate High Motor Temperature and Seal Failure to verify that the system provides warnings and protects each pump and motor.

10.02.7 Standby Power

a. General

1. Permanent, skid mounted standby AC power engine generator shall be provided on site. Unit shall be mounted on structural channel rails. Install generator on a concrete pad.

2. Generator shall be capable of starting and operating the entire pump station, including all pumps.

3. The entire engine-generator system shall be built, tested, and shipped so as to assure the unit is factory engineered and assembled so there is one source of supply, service, and warranty responsibility.

4. Height of engine-generator and the associated control panel shall not exceed 6 feet.

5. Unit shall be provided with minimum four spring-type vibration isolators with adjusting screws and earthquake restraints for mounting.

6. Generator unit shall be provided with enclosure that yields a "quiet" operation with maximum average of 69 decibels measured at a distance of 23 feet (7 meters) from the center of the unit. Additional sound dampening shall be provided to meet local noise control code requirements, as required. Entire engine-generator enclosure shall be rated for all-weather outdoor operation. All bolts shall be rust resistant, with lock washers. Doors shall be provided on each side for easy access to unit, and shall be provided with continuous hinges. Doors shall be equipped with adjustable plated pad type locking latches with matched keys. Interior lights shall be provided.

7. The engine-generator system shall be UL rated under Standard 2200 for Stationary Engine Generator Assemblies.

b. Generator Unit

1. Generator frequency output shall be 60 Hertz, adjustable from 56 to 64 Hertz.

2. Voltage output shall be 480 volt, 3-phase. Generator shall have a solid-state voltage regulator capable of maintaining voltage within 1.5 percent at any constant load from 0-100 percent of rating.

3. Upon application of pump station rated load (all pumps), the instantaneous voltage dip shall not exceed 20 percent (15 percent for VFD driven pumps), and shall recover to the rated voltage within one second.

4. Generator shall be the brushless alternator type, and windings shall be constructed of copper only.

5. Generator shall be provided with a unit-mounted circuit breaker with terminals sized for the actual feeder cable.

6. A hospital grade spark arresting silencer connected to the engine via a stainless steel flexible coupling shall be provided.

c. Fuel

1. Engine generator shall be diesel fueled. Fuel tank shall be full at the time of District acceptance of facility.

2. Day tank shall provide for minimum 24 hours of operation under design peak influent flow loading conditions. Fuel tank shall be a double walled steel tank. Fuel tank shall be integral with the engine generator and installed under the generator, unless such installation would cause the engine generator unit height to exceed that specified herein. Separately mounted tank shall be installed on a concrete pad, and in close proximity to the engine generator.

3. Tank shall be provided with a desiccant dry air filter on vents to prevent condensation of water within the tank. Fuel line to the engine shall be fitted with a large capacity fuel filter and water separator.

4. Fuel tank shall be installed and oriented such that fuel re-filling can be accomplished with no more than 16 feet of hose.

d. Engine Unit

1. Engines shall be air cooled whenever possible. Water cooled engines shall be provided with anti-freeze protection.

2. Turbochargers shall not be allowed.

3. The maximum engine speed shall be 1800 rpm.

4. Engine shall be equipped with an oil sump heater for air cooled types, or an engine block coolant heater for water cooled types. Heater units shall be rated to ensure a preheating temperature of 100 degrees F, and shall provide anti-freeze protection equal to zero (0) degrees F. Heater shall automatically disconnect upon engine start. Heater shall be provided with a dedicated circuit breaker in the main electrical panel.

5. Engine shall be equipped with a heavy duty battery starting system. Battery shall be sized to provide sufficient charge for minimum five (5) cranking cycles at minimum 10-seconds per cycle. A 120-volt trickle charging battery charger with a dedicated circuit breaker in the main electrical panel shall be provided. Charger shall be equipped with an ammeter and voltmeter. Charger shall be capable of recharging the battery to full charge

within one hour. Generator shall provide power to the charger when it is operating.

6. Engine shall have an electronic speed governor that shall hold the engine speed to within 1/2 cycle per second of rated value.

e. Controls

1. The following instruments shall be provided to monitor the engine: oil pressure gauge, engine temperature gauge, RPM tachometer, and total run time meter (hours, non resettable).

2. The following instruments shall be provided to monitor the generator: voltmeter, ammeter, and frequency meter. A panel illumination light shall also be provided.

3. Panel lights shall be provided for the following conditions: emergency generator run status, engine failure due to overheat, low oil pressure, speed (RPM) exceeded, low fuel, and low battery charge.

4. A push-to-test button shall be provided for testing all panel indicator lights.

5. A test-auto-off switch shall be provided for operating the generator.

6. Automatic-emergency shut down shall be provided for the following conditions: over cranking, over speed, low oil pressure, and high coolant temperature. Controls shall be interlocked to drop the electrical load prior to an emergency shut down, and the controls or transfer switch shall include an unloaded generator cool-down delay.

f. Transfer Switch

1. An automatic transfer switch shall be provided that will integrate with and operate the standby generator. The transfer switch shall be UL rated under Standard 1008 for Transfer Switch Equipment. Switch shall be furnished in a UL rated NEMA 1 enclosure and shall be mounted inside weatherproof electrical enclosure #2.

2. Transfer switch shall be electrically operated and mechanically held. Switch shall be mechanically interlocked to ensure only one of two possible positions - normal or emergency.

3. A manual operating handle shall be provided for maintenance purposes. The handle shall permit the operator to manually stop the contacts at any point throughout their entire travel to inspect and service the contacts when required.

4. Switch shall be provided with a microprocessor-based control panel to direct operations. Control panel shall be provided with a keyed disconnect plug to enable the panel to be disconnected from the transfer switch for routine maintenance.

5. Voltage and Frequency Sensing:

   a) Voltage for each phase of the primary power source shall be monitored continuously, with pickup adjustable from 85% to 100% of nominal, and dropout adjustable from 75% to 98%.
   b) Single-phase voltage sensing of the emergency source shall be provided, with pickup voltage adjustable from 85% to 100% of nominal and independent frequency sensing with pickup adjustable from 90% to 100%.
   c) Accuracy shall be within ±2%.
   d) Voltage and frequency settings shall be field adjustable in 1% increments without the use of tools, meters, or power supplies.

6. Time Delays - the following time delays shall be provided, which shall be field adjustable without use of tools:

   a) Time delay Start: adjustable (0-15 sec) - to prevent nuisance generator set starts in the event of momentary power system loss.
   b) Transfer Time Delay: adjustable (2-120 sec) - to allow generator set to stabilize before application of load.
   c) Retransfer Time Delay: adjustable (6-30 minutes) - to allow the power system to stabilize before retransfer of the load.
   d) STOP delay: adjustable (2 sec to 10 minutes) - to maintain availability of generator set for immediate reconnection in the event the normal source fails shortly after retransfer and to allow gradual generator set cool down by running unloaded.

7. A "commit/no commit to transfer" selector switch shall be provided to select whether the load should be transferred to the emergency generator if the normal source restores before the generator is ready to accept the load.

8. Auxiliary contacts shall be provided, consisting of one contact when the switch is connected to the normal source and a second contact when the switch is connected to the emergency source.

9. Indicating lights shall be provided, one to indicate when the switch is connected to the normal source (green) and one to indicate when the switch is connected to the emergency source (red).

10. Engine Exerciser - An engine generator exercising timer shall be provided, including a selector switch to select exercise with or without load transfer. The exerciser shall be programmable to enable exercise for one minute to 24 hours per day in one minute increments for 1 to 7 days per week.

11. The switch manufacturer shall be certified to ISO 9001 and shall have third party certification verifying quality assurance in design/development, production, installation, and servicing in accordance with ISO 9001.

12. A minimum 100-hour battery backup power supply shall be provided to maintain clock settings during normal loss of power.

g. Testing

1. A factory test shall be performed and a logged test report provided to the District. Test shall be performed using a load bank, with both full load and half load tests performed. Each test shall be performed for minimum 4 hours, and all operating parameters recorded on 15 minute intervals.

2. Generator unit shall be tested on site under full load conditions for two hours. All operating parameters shall be recorded on 15 minute intervals.

10.02.8 Electrical and Instrumentation/Control Requirements

a. General

1. Listing and Labeling

a) Unless otherwise specified, electrical equipment and materials shall be listed and labeled for the purpose for which they are used by Underwriters Laboratories Inc. (UL) or Factory Mutual (FM).

b) All control panels, factory, shop or field assembled, shall be labeled as a unit in accordance with UL 508. The UL 508 label shall be affixed to the inside of the door or cover, adjacent to the data pocket.

2. Instrumentation/Control System

a) The instrumentation/control system includes all equipment, instruments and wiring for control and monitoring of all pumps and equipment, including custom control panels, motor starting panels and control equipment.

b) The instrumentation/control system shall be furnished by a single supplier who shall take complete responsibility for the design, assembly and start-up of the complete instrumentation/control system.

c) The instrumentation/control system supplier shall be regularly engaged in the design and assembly of systems of similar scope and complexity for at least 3 years, and shall be located within a 250-mile radius of the site.

d) The instrumentation/control system supplier shall provide for time, equipment and support in the shop to factory test the instrumentation/control system in the presence of a District representative. All control functions and all status and alarm monitoring and indication shall be demonstrated under simulated operating conditions. All required corrections shall be provided prior to shipment to the site.

b. Pump Station Operation Overview

The pump station is a typical duplex configuration and is equipped with two submersible pumps. The design intent is that one pump is capable of fully operating the pump station and the other pump is a backup. The operating elevations of the pump station are based from the pump system curves and the known pump station flow capacities as well as the projected future flows. The primary control system of the pump station is by ultrasonic level measurement. The ultrasonic level unit controls the starting and stopping of the pumps. An independent backup high level float switch with true time off cycle timer hardwired relay logic operates the pumps in the event the ultrasonic system should fail. The pump station control modes in descending priority are:

1. Ultrasonic level
2. High level float switch and hardwired cycle timer relay logic.

3. Manual control.

The pump station has a utility power and an in-station permanent standby generator for backup power capable of operating the entire station with both pumps running, sequentially starting. Both pumps shall automatically alternate after each pumping cycle. A pump lead selector switch shall be provided for dedicated pump lead selection. The pump equipment is protected by hardwired interlock to shutdown pump on motor over temperature alarm or motor overload alarm condition. Pump shall not shut down on seal leak/moisture alarm. A dedicated telephone auto dialer shall monitor a minimum of eight critical alarms from the pump station.

c. Electrical Requirements

1. Electrical Service

Standard voltage for pump stations is 480Y/277-Volts, three phase, 4 wire underground service, unless power company dictates otherwise. Power company customer service engineer name and phone number must be available in Specifications and/or on the Construction Plans for contacting during construction. Utility transformer impedance must be shown on One-Line drawing for short circuit available rating requirement.

2. Telephone Service

The standard telephone service to the pump station is a single dedicated voice line with a dual phone jack, one for connection to auto dialer, the other for spare. Telephone company customer service engineer name and phone number must be available in Specifications and/or on the Construction Plans for contacting during construction.

3. Weatherproof Enclosures

a) There shall be two weatherproof electrical enclosures (#1 and #2). Both weatherproof enclosures shall be NEMA 12/3R, 304 stainless steel free standing 72"Hx72"Wx24"D with double padlock-able doors. The front of both enclosures shall be provided with 24" extended rain shields. Both enclosures shall be installed side by side unless prohibited by site conditions. The site layout shall be approved by the District.

b) Enclosures shall be equipped with exhaust fans with filter louvers, sized adequately for all heat loss generated by interior equipment in each enclosure. If variable frequency drives are provided, an air conditioner must also be provided and sized accordingly for all heat loss generated by the variable frequency drive equipment at full operation.

c) Weatherproof electrical enclosure #1 shall house the following equipment:

1) Both combination motor starter panels,
2) Pump sequence control panel,
3) Ultrasonic level indicator/controller,
4) Flow meter indicator transmitter,
5) Auto-dialer, and
6) Miscellaneous devices. i.e. dual-jack phone, duplex outlets, panel lights, heater, exhaust fan, and alarm beacon light mounted on top of the enclosure.

d) Weatherproof electrical enclosure #2 shall house the following equipment:

1) Automatic transfer switch,
2) Power distribution block,
3) Secondary surge arrestor,
4) Dry type transformer,
5) Dry type transformer primary breaker,
6) Panelboard
7) Panel lights, heater, exhaust fan, duplex outlets, and
8) Space dedicated for O&M books.

4. Main Breaker and Utility Power Meter

a) Main breaker shall be installed outside weatherproof enclosure #2. Main breaker shall be thermal magnetic type breaker in NEMA 3R enclosure provided with key lock.

b) The utility service meter enclosure shall be provided per utility power company standards, and shall be installed outside the weatherproof enclosures. Utility service meter can be combined with main breaker as one unit, meter-main.

5. Disconnect Air-Gap Junction Box/Enclosure

A disconnect air-gap junction box/enclosure shall be provided to intercept the submersible pump power and control cables before homeruns to the control panel. The enclosure shall be a NEMA 4X, stainless steel type and shall be installed on a pedestal at a minimum 4'-0" height above ground level and a minimum 3'-0" horizontal clearance from the wetwell wall. The air-gap enclosure configuration is to eliminate the need of providing seal-off on homerun conduits from the wetwell to the control panel.

a) Disconnect air-gap enclosure shall consist of pump power cable quick-disconnect receptacles with mechanical On-Off interlock switches for connecting one end of pump submersible cables with their matching plugs. The On-Off mechanical interlock switch shall prevent the plug from being disconnected while the receptacle is energized and the switch shall not be capable of being turned "ON" until the plug is inserted properly.

b) Disconnect air-gap enclosure shall also consist of pump control cable twist-lock connectors and matching plugs dedicated for each pump motor over temp and pump seal leak, and for each wetwell high level float and over flow float switches.

c) Ultrasonic level transducer cable shall be routed through the air-gap enclosure without splice or quick-disconnect termination.

6. Cable Trench

A common cable trench for pump homerun cables from wetwell to air-gap enclosure shall be installed flush to ground between the wetwell and air-gap enclosure. The trench shall be provided with an accessible top cover. The actual trench dimensions must be sized per NEC cable filled requirement, minimum trench size will be 9" deep and 6" wide with 1/2" thick removable top cover. The trench shall be Synertech Product Plastibeton, model #68, H20 loading capacity or approved equal. The entire trench shall be encased in a minimum 6" concrete all around.

All homerun cables from the wetwell to the air-gap enclosure shall be routed thru the underground channel without conduits. Homerun cables between air-gap enclosure and control panel shall be in conduits without seal-offs.

7. Combination Motor Starter Panels

a) For pump motor rated less than 25 horsepower or as otherwise required by the electrical utility company, each pump shall be provided with a combination door interlock motor circuit protector and across-the-line starter in NEMA 1 enclosure. Each starter panel shall contain standard components and features, NEMA full size rated starter (NEMA half sizes and IEC contactors are not permitted), door mounted ammeter and overload reset pushbutton.

b) For pump motor rated equal or greater than 25 horsepower or per utility power service requirement, each pump shall be provided with a combined door interlocked motor circuit protector and soft starter with bypass contactor in NEMA 1 ventilated enclosure. Each starter panel shall contain standard components and features, door mounted ammeter, and overload reset pushbutton. Bypass contactor shall be rated for across-the-line starting capacity.

c) For pump motor provided with variable frequency drive (VFD), each drive shall be provided with combined door interlocked motor circuit breaker in NEMA 1 ventilated enclosure. The VFD shall be provided with standard components and features: IGBT PWM inverter technology, microprocessor control, 95% minimum operational efficiency, trip-free operation, 0.95 power factor over the entire speed range, input line reactor, input AC fuses, diode rectifier, door mounted customer interface keypad/display, two isolated 4-20mA DC input and output speed signals, and manual speed potentiometer.

Air conditioner must be sized accordingly to VFD heat loss over entire speed operating range with consideration of VFD panel location within weatherproof electrical enclosure.

d) Combination Starter Panel Accessories - each starter panel shall be provided with the following accessories:

1) Auxiliary overload relay contact (1 N.O. and 1 N.C.)
2) Starter units shall have the same fault current withstand rating as the main power distribution bus fault current withstand rating.

3) Bus voltage to 120 V control power transformer:
   (a) Fused on primary and secondary sides.
   (b) Control transformer rated for 140 percent of required load.

8. Raceway and Wiring

a) Raceway

1) Minimum size conduit shall be ¾ inch.

2) Applications:

   (a) Exposed Interior: Type RGS.
   (b) Exposed Exterior: Type RGS.
   (c) Exposed Instrumentation shielded conductors, including routing through manholes and handholes: Type RGS.
   (d) Direct Buried: Type PVC.
   (e) Class 1 Division 1 or Corrosive Areas: Type PVC-RGS.
   (f) Vertical Runs Through Equipment Pad or Grade: Convert PVC conduit to PVC-Coated RGS from 12 inches below top of pad or grade to 6 inches above.

b) Wiring

1) Material: Annealed copper.

2) Insulation:

   (a) Conform to applicable requirements of NEMA WC3, WC5, and WC7.
   (b) No. 8 AWG and Smaller: Type THHN/THWN.
   (c) No. 6 AWG and Larger: Type XHHW-2.
   (d) Flexible Cord and Cable. Type SOW-A/50, 600 volts, with ethylene propylene rubber insulation in accordance with UL 62. Also conform to physical and minimum thickness requirements of NEMA WC 8.
   (e) Type: 600-volt class, stranded.
   (f) Temperature: NEC 75 degrees C ampacity.
   (g) Power conductors shall not be smaller than No. 12 AWG.

(h) Control conductors shall not be smaller than No. 14 AWG.

(i) Instrumentation conductors shall not be smaller than No. 18 AWG.

3) Color Coding:

(a) For power and 120V control conductors, provide all single conductors with integral insulation pigmentation of the designated colors through No. 8 AWG. Conductors larger than No. 8 AWG shall be provided with color coding by wrapping the conductor at each end and at all accessible locations with at least six full overlapping turns of colored self-adhesive vinyl tape around the conductor covering an area 1-1/2 to 2 inches wide at a visible location at all conductor termination and pulling points. Vinyl tape shall be 3M Company No. 35, Plymouth Rubber Company, or equal.

(b) Phase A, B, C implies the direction of positive phase rotation.

(c) Use the following colors:

System	Conductor	Color
All Systems	**Equipment Grounding**	**Green**
120/240 volts Single-Phase, 3-Wire	**Grounded Neutral Phase A Phase B**	**White Black Red**
480 volts Three-Phase, 3-Wire	**Phase A Phase B Phase C**	**Brown Orange Yellow**
120V ac Control	**Single conductors**	**Red**

9. Exterior Fixture

a) One exterior fixture shall be provided with a control station located inside electrical enclosure #1.

1) Light pole shall be Square Straight aluminum pole, 16 feet height, 9 inches nominal shaft based size/wall thickness, one fixture at 90 degree mounting with standards dark bronze finished color

by Lithonia Lighting part # SSA-16-AC-DM19-DDB.

2) Fixture shall be 175 watt Metal Halide, Type IV forward throw, sharp cutoff, 120 volts, 4" square pole arm mounting with Quartz restrike system, Corrosion-resistant finish, CWA Pulse Start Ballast, and Dark Bronze finished color by Lithonia Lighting part # KSF1-175M-44SC-120-SP04-QRS-CR-DDB or approved equal.

3) Control station shall be by Intermatic switch No. 885L, 60 minutes with hold feature and rain tight cover.

d. Instrumentation/Control Requirements

1. Level Measurement

a) Ultrasonic level designated as (LE/LIT) shall be by Milltronics HydroRanger 200 transmitter/controller in NEMA 4X enclosure with portable programmer keypad remote XPS15 transducer. This type of transducer supports small operation radius range requirement. The transducer shall be constructed for 6 degree beam angle, which only requires 1-ft radius clearance for every 10-ft measurement range. Cable length shall be adequate length for homerun from wetwell to level transmitter/controller via air-gap box. No cable splices will be allowed between the transducer and the transmitter/controller.

1) Operation level set points:

(a) First set point is lowest in elevation and referred to as the cut-off or pumps stop.

(b) Second set point is the lead pump start. Set point shall be a minimum of 12" above first set point.

(c) Third set point is the lag pump start. Set point shall be a minimum of 12" above second set point.

(d) Fourth set point is high level alarm to dialer and to exterior red beacon light.

b) High level float backup switch designated as (LSH) shall be provided for pump control in case of ultrasonic level fail. Float switch shall be by Anchor Scientific with adequate cable length for homerun from sensor to air-gap

enclosure with extra 4 feet slack loop in the wetwell. The high float backup switch shall be connected to a true cycle-off delay timer logic to start both pumps sequentially and shall run for an adjustable time (0-30) minutes, preset at 5 minutes. Actual operating minutes shall be calculated based on the wetwell volume. The high backup level alarm shall be connected to the auto dialer and the exterior red beacon light.

c) Overflow level float switch designated as (LSO) shall be by Anchor Scientific with adequate cable length for homerun from sensor to air-gap enclosure with extra 4 feet slack loop in the wetwell. Overflow switch shall generate the overflow alarm to auto dialer. Pump operation is not connected to this overflow float.

2. Flow Meter

a) Flow meter shall be electromagnetic type with a remote indicator transmitter. Flow meter shall be cast or ductile iron, Teflon lined and shall be sized to maintain an accuracy of 0.5 percent of flow above 3 ft/sec. Flow meter shall be provided with standard features, zero stability feature to eliminate the need to stop flow to check zero alignment, no obstructions to flow, very low pressure loss. Acceptable manufacturer: Krohne Series 4000 flow meter with IFC 110F electronic converter, 316L SS electrode, with ANSI class 150 flanges and 316L SS grounding rings or approved equal.

1) The flow meter/electrode shall be installed in the meter vault.

(a) A junction box shall be provided inside the meter vault for conduit intercept.
(b) The junction box shall be mounted on the wall inside the vault, but below the electrode mounting height to prevent condensation water travel back to the electrode.
(c) The junction box shall be provided with ½" punch hole at the bottom for drainage.

2) Flow indicator transmitter shall be mounted in weatherproof electrical enclosure #1.

(a) Flow indicator transmitter shall read instantaneous flow in gallons per minute. Totalizer shall read in gallons x 1000.

3. Flow Meter Vault Flood Alarm

Flooding of the flow meter vault shall be monitored by a float switch mounted 6-inches above the meter vault floor. The switch and mounting shall be as approved by the District. The meter vault flood switch shall generate a flood alarm to the auto dialer.

4. Pump Sequence Control Panel (PSCP)

Pump sequence control panel shall be in NEMA 12 enclosure. Power to the control panel shall be separately fed from the load center. The enclosure shall consist of the following front mounted control devices:

a) Control power On-Off switch,
b) Control power on light (green),
c) Lead selector switch. (Lead Pump 1 – Alternate – Lead Pump 2),
d) Hand-Off-Auto switches (each pump),
e) Running lights (red) - (each pump),
f) Fail lights (amber) - (each pump),
g) Motor Over Temperature lights (amber) - (each pump),
h) Pump Seal leaks (amber) - (each pump),
i) Running time meters - (each pump),
j) Beacon light Enable-Disable switch, and
k) Beacon light Test pushbutton.

5. Pump Sequence Control Auxiliaries:

a) Relays

1) General:
(a) Relay Mounting; Plug-in type socket.
(b) Relay Enclosure: Provide dust cover
(c) Socket Type: Screw terminal interface with wiring.
(d) Socket Mounting; Rail.
(e) Furnish hold-down clips.

2) Control Circuit Switching Relay, Non-latching:

(a) Type: Compact general purpose plug-in.

(b) Contact Arrangement: 3 Form C contacts.
(c) Contact Rating: 10A at 28V dc or 240 ac.
(d) Contact Material: Silver cadmium oxide alloy.
(e) Coil Voltage: As noted or shown.
(f) Coil Power: 1.8 watts (dc), 2.7VA (ac).
(g) Expected Mechanical Life: 10,000,000 operations.
(h) Expected Electrical Life at rated load: 100,000 operations.
(i) Indication Type: Neon or LED indicator lamp.
(j) Push-to-test button.
(k) Manufacturer and Product: Potter and Brumfield; Series KUP.

b) Intrinsic Safety Barriers

1) GEMS Model 14460 intrinsically safe relays provided in a separate intrinsically safe compartment inside the PSCP enclosure.
2) A grounded metal partition provided inside the PSCP enclosure to separate the intrinsically safe relays from non-intrinsically safe components.
3) The Float Switch Cables routed in conduit into the PSCP intrinsically safe compartment.

c) Pilot Devices

1) Indicating Lights:

(a) Heavy-duty, push-to-test LED type, oil tight, industrial type for 120V ac applications.
(b) Screwed on prismatic glass lenses in colors noted and factory engraved legend plates for service legend.
(c) Manufacturers and Products:
(1) Cutler-Hammer; Type 10250T.
(2) General Electric; CR 2940U
(3) Allen Bradley; Type 800H

2) Selector Switch and Push Button:

(a) Heavy-duty, oil tight industrial type with contacts rated for 120V ac service at 10 amperes continuous.

(b) Standard size, white field, legend plates with black markings, for service legend.
(c) Selector Switch Operator: Black knob type.
(d) Single hole mounting, accommodating panel thicknesses from 1/16 to ¼ inch.
(e) Manufacturers and Products:
(1) Cutler Hammer; Type T.
(2) Square D; Type K.

d) Time Delay Relay

1) On Timer and Off Timer:

(a) Multi-function operation with two Form-C delayed output contacts.
(b) Time delay range as specified or shown in the drawings.
(c) Heavy duty.
(d) Manufacturers and Products:
(1) Idec.
(2) Eagle Signal Controls.

e) Elapsed Time Meter (Hour Meter)

1) Six-digit wheels including a 1/10 digit.
2) Automatic recycle at zero.
3) Time range in hours.
4) Accuracy: 1 percent.
5) Sealed against dirt and moisture.
6) Tamper-proof and non-resettable.
7) Manufacturers and Products:
(a) Eagle Signal Controls.
(b) Or equal.

f) Panel Wiring

1) Power and Control Wiring: 600-volt class, insulated, stranded copper.

(a) Size: Minimum 14 AWG enclosed in either sheet metal raceway or wiring duct.

2) Signal Circuit Wiring: Twisted shielded pairs minimum No. 16 AWG, separated at least 6 inches from power wiring.

3) Identification: Permanent heat impregnated polyvinyl chloride (PVC) alpha-numeric labels.

6. Alarm Exterior Beacon Light

Alarm exterior light shall be provided with beacon weatherproof type, 120Vac. The beacon light shall be mounted extended on top of weatherproof electrical enclosure #1 and extended to be visible from the nearest public road way. The high level alarm contacts from ultrasonic level and high level float switch shall be connected to this beacon light. The beacon light shall be equipped with Enable-Disable selector switch and a Beacon Test pushbutton, both mounted on the front of the pump sequence control panel. The high water alarm will be automatic reset. No latching contact is required. (No audible alarm is required). The beacon light shall be by Federal Signal part # 225-120VAC-RED.

7. Auto Dialer

A dedicated telephone auto dialer shall be provided. Auto dialer shall be by Phonetics Inc. Sensaphone Express II with 8-channels minimum and built-in power failure monitoring. No substitution allowed. Alarm contacts shall be monitored by auto dialer as follows:

1) Overflow.
2) High wetwell (from ultrasonic high level set point or high level float backup).
3) Pump 1 fail (from motor overload or motor over temperature).
4) Pump 2 fail (from motor overload or motor over temperature).
5) All pumps running (from motor starter auxiliary contactors).
6) Standby generator on (from generator running auxiliary contact).
7) Control power fail (from 120Vac control power relay).
8) Flow meter vault flooding (from meter vault flood switch).
*) Auto dialer power failure (internal alarm).

8. Telephone Jack Configuration

A dedicated telephone line shall be provided for auto dialer communication. The telephone jack shall be a duplex port type. One port is dedicated for the auto dialer connection and the other

port is for testing purpose. Duplex phone shall be by Radio Shack, cat #279-448 or approved equal.

d. Calibration Sheets and Templates

Electronic copies of the following instrumentation calibration sheets and templates shall be provided by the District where applicable during the project design phase. They shall be filled out by the Engineer and returned to the District, with paper copies inserted in the O&M manual:

1. Ultrasonic Level Transmitter/Controller Parameters.
2. Auto Dialer Parameters.
3. Electromagnetic Flow Meter Parameters.
4. Soft Starter or Variable Frequency Drive Parameters.

Chapter 11

SEPTIC TANK EFFLUENT PUMP (STEP) SYSTEMS

Section 11.01 General Provisions

11.02 Technical Specifications

11.03 Application

11.04 Inspection

Chapter 11

SEPTIC TANK EFFLUENT PUMP (STEP) SYSTEMS

11.01 General Provisions

With the approval of the District, STEP systems which pump to a public sewer line may be installed when:

a. A public gravity sewer is adjacent to the lot, and

b. Gravity access to a public sewer line cannot reasonably be obtained, and

c. The District determines that a public pump station serving multiple properties is not a more appropriate solution, and

d. Only one house or building is connected to the STEP system and pressure line, and

e. Unless approved by the District, the public sewer line at the point of connection is a polyvinyl chloride (PVC) material, and flows in the public line are such that hydrogen sulfide generation will not be a problem.

The STEP system operation, maintenance, electricity, replacement, and sludge removal costs are the responsibility of the property owner. The property owner is also responsible for the repair or replacement of the tank and connections if infiltration occurs.

The District shall be permitted to enter upon private property for the purpose of inspection, observation, measurement, sampling, and testing of the STEP system.

11.02 Technical Specifications

11.02.1 On-Site Interceptor Tank

a. Tanks shall be 1000 gallon precast concrete, fiberglass or polyethylene and shall have been designed by a registered engineer and approved by the local regulatory agencies. The manufacturer shall provide the structural design and certification to the District for review.

b. The tank shall be guaranteed in writing by the tank manufacturer for a period of two years from the date of delivery to the site.

c. The tank shall successfully pass a hydrostatic test at the time of manufacture and after installation at the site. An alternate method is a vacuum test. The hydrostatic test shall measure the water loss due to exfiltration during a two-hour period where the tank is filled with water to

the riser. The two-hour loss shall not exceed six gallons for concrete, and no loss for polyethylene and fiberglass tanks.

d. The tank shall be installed in accordance with the manufacturer's instructions. The installation and testing shall be witnessed by District personnel.

11.02.2 Risers and Lids

a. Inlet risers, if required, shall be ribbed PVC. Risers shall be at least 12-inches high and shall have a minimum nominal diameter of 21-inches.

b. Outlet risers shall be ribbed PVC. Outlet risers shall be at least 12-inches high and a minimum nominal diameter of 24-inches.

c. Lids shall be Orenco Systems Model FL-21g or FL-24g, or equal, and provided with neoprene gasket, and stainless steel bolts.

d. Risers and lids shall be free from infiltration.

11.02.3 Pumping Assemblies

The pumping system shall be an Orenco Pumping System, or equal, that is designed by a registered engineer to meet the application of its intended use.

11.03 Application

The applicant shall submit to the District or City two copies of the engineering plans prepared by a licensed professional engineer. The application shall also show that gravity sewer is not available to the lot, that there is no practical way to serve the lot with gravity sewer, and that there will not be a hydrogen sulfide problem at the point of connection to the gravity system.

The District may set and charge additional fees for the plan review and inspection of STEP system installations.

Prior to final acceptance by the District, the property owner must furnish an easement for access to the property stating that a STEP system exists on the property, that it is a private system (not owned or maintained by the District), and that the District shall be permitted to enter upon the subject property for the purpose of inspection, observation, measurement, sampling, and testing of the STEP system.

11.04 Inspection

Inspection and testing of the individual STEP system shall be required prior to final acceptance by the District.

Chapter 12

PROHIBITED ACTIVITIES

12.01 Prohibited Activities

12.01.1 In addition to the restrictions of Ordinance 27, Section 3.B, the following activities are prohibited, except as expressly allowed or approved by District / City/ County permit:

a. The discharge, placement, deposit, dumping or otherwise contributing a solid or liquid material into the public storm and surface water system, either directly or indirectly, which may obstruct flow or otherwise interfere with the operation or function of a public storm and surface water facility. This shall include, but is not limited to, placing of soil or rock without an approved fill permit, or the dumping of debris, yard waste, rubbish, trash, or other waste material.

b. The operation of a motor vehicle on native ground in a Sensitive Area or Vegetated Corridor.

c. The removal of native vegetation in a Sensitive Area or Vegetated Corridor.

d. The interruption of a natural water source to a Sensitive Area.

e. The removal of non-native invasive vegetation from a Sensitive Area, Vegetated Corridor, or Storm Water Infrastructure other than with an integrated vegetation management approach.

f. The use of pesticides on property, including easements, owned by a city, county or other political subdivision, including the District.

12.01.2 Violation of this Chapter is subject to enforcement by the District and City pursuant to applicable ordinances and rules.

APPENDIX A:
HYDROLOGY AND HYDRAULICS

1.0 HYDROLOGIC ANALYSIS

This section presents acceptable methodology for estimating the quantity and characteristics of surface water runoff, as well as the assumptions and data required as input to the methods. These methods should be used to analyze existing and design proposed drainage systems and related facilities.

1.1 Rational Method

The rational method for analyzing small drainage basins is allowed with the following limitations:

a. Only for use in predicting a conservative peak flow rate to be used in determining the required capacity for conveyance elements.

b. Drainage subbasin area cannot exceed 25 acres for a single calculation without approval from District or City.

c. The time of concentration shall be five minutes when computed to be less than five minutes.

d. Rainfall intensities shall be from the following IDF Table or an alternative approved by the District.

RATIONAL METHOD
RAINFALL INTENSITIES FOR EAST WASHINGTON COUNTY

Rainfall Intensity (inches per hour)

TIME OF CONCENTRATION (MIN)	STORM EVENT: YR / (PROBABILITY)					
	2 (50%)	5 (20%)	10 (10%)	25 (4%)	50 (2%)	100 (1%)
0	1.90	2.50	3.00	3.40	4.00	4.50
5	1.90	2.50	3.00	3.40	4.00	4.50
10	1.30	1.70	2.20	2.50	3.00	3.50
15	1.10	1.40	1.80	2.10	2.50	2.90
20	0.90	1.20	1.50	1.80	2.10	2.40
30	0.75	0.95	1.20	1.40	1.65	1.90
40	0.60	0.75	1.00	1.15	1.30	1.60
50	0.55	0.70	0.85	1.00	1.15	1.35
70	0.45	0.55	0.70	0.82	0.95	1.10
100	0.40	0.45	0.55	0.67	0.75	0.90
180 or more	0.35	0.40	0.50	0.60	0.70	0.85

1.2 Unit Hydrograph Methods

a. To obtain a realistic and consistent hydrologic analysis for each development site, all developments shall use the hydrograph analysis method for drainage planning and design unless otherwise approved in advance by the District. The physical characteristics of the site and the design storm shall be used to determine the magnitude, volume and duration of the runoff hydrograph. The Santa Barbara Urban Hydrograph (SBUH) will be the primary acceptable unit hydrograph method.

The "HYD" computer program, developed by King County, Washington in its Surface Water Design Manual, January 1990 uses these methods to generate, add and route hydrographs. The District will check all hydrologic calculations using the King County "HYD" program. However, the District will allow the use of the rational method for analysis of drainage basins of 25 acres or less.

b. The Design Storm

1) Return frequency and duration specify the design storm event. The design storms shall be based on two parameters:

a) Total rainfall (depth in inches).

b) Rainfall distribution (dimensionless).

c. Design Storm Distribution

1) The rainfall distribution to be used within the District is the design storm of 24-hour duration based on the standard NRCS Type 1A rainfall distribution using the chart on the following page. The total depth of rainfall for storms of 24-hour duration and 2, 5, 10, 25, 50 and 100 year recurrence are 2.50, 3.10, 3.45, 3.90, 4.20, 4.50 inches respectively.

Recurrence Interval (years)	**Total Precipitation Depth (in)**
2	2.50
5	3.10
10	3.45
25	3.90
50	4.20
100	4.50

2) The following table contains the NRCS Type 1A precipitation distribution.

DESIGN STORM DISTRIBUTION CHART

			Rainfall Depth, (Inches)					
	Percent Rainfall		2YR	5YR	10YR	25YR	50YR	100YR
Hour	Incremental	Cumulative	2.50	3.10	3.45	3.90	4.20	4.50
1	2.40	2.40	0.06	0.07	0.08	0.09	0.10	0.11
2	2.60	5.00	0.07	0.08	0.09	0.10	0.11	0.12
3	3.20	8.20	0.08	0.10	0.11	0.12	0.13	0.14
4	3.80	12.00	0.10	0.12	0.13	0.15	0.16	0.17
5	4.44	16.44	0.11	0.14	0.15	0.17	0.19	0.20
6	5.18	21.62	0.13	0.16	0.18	0.20	0.22	0.23
7	6.48	28.10	0.16	0.20	0.22	0.25	0.27	0.29
8	16.44	44.54	0.41	0.51	0.57	0.64	0.69	0.74
9	7.58	52.12	0.19	0.23	0.26	0.30	0.32	0.34
10	5.28	57.40	0.13	0.16	0.18	0.21	0.22	0.24
11	4.96	62.36	0.12	0.15	0.17	0.19	0.21	0.22
12	4.32	66.68	0.11	0.13	0.15	0.17	0.18	0.19
13	4.02	70.70	0.10	0.12	0.14	0.16	0.17	0.18
14	3.42	74.12	0.09	0.11	0.12	0.13	0.14	0.15
15	3.28	77.40	0.08	0.10	0.11	0.13	0.14	0.15
16	3.00	80.40	0.08	0.09	0.10	0.12	0.13	0.14
17	2.80	83.20	0.07	0.09	0.10	0.11	0.12	0.13
18	2.40	85.60	0.06	0.07	0.08	0.09	0.10	0.11
19	2.40	88.00	0.06	0.07	0.08	0.09	0.10	0.11
20	2.40	90.40	0.06	0.07	0.08	0.09	0.10	0.11
21	2.40	92.80	0.06	0.07	0.08	0.09	0.10	0.11
22	2.40	95.20	0.06	0.07	0.08	0.09	0.10	0.11
23	2.40	97.60	0.06	0.07	0.08	0.09	0.10	0.11
24	2.40	100.00	0.06	0.07	0.08	0.09	0.10	0.11

The above table is from the "Subbasin Hydrologic Modeling Criteria" by Kramer, Chin, & Mayo Inc., 1991.

d. Runoff Parameters

The physical drainage basin characteristics listed below shall be used to develop the runoff hydrograph.

1) Area
2) Curve Number
3) Time of Concentration

a) Selection of Area:

To obtain the highest degree of accuracy in hydrograph analysis requires the proper selection of homogeneous basin areas. Significant differences in land use within a given basin must be addressed by dividing the basin area into subbasin areas of similar land use and/or runoff characteristics. Hydrographs should be computed for each subbasin area and superimposed to form the total runoff hydrograph for the basin.

All pervious and impervious areas within a given basin or subbasin shall be analyzed separately. This may be done by either computing separate hydrographs or computing the precipitation excess. The total precipitation excess is then used to develop the runoff hydrograph. By analyzing pervious and impervious areas separately the cumulative errors associated with averaging these areas are avoided and the true shape of the runoff hydrograph is better approximated.

b) Selection of Curve Number:

The Natural Resources Conservation Service (NRCS) (formerly referred to as the Soil Conservation Service (SCS)) has developed "curve number" (CN) values based on soil type and land use. The combination of these two factors is called the "soil-cover complex."

The soil-cover complexes have been assigned to one of four hydrologic soil groups, according to their runoff characteristics. Soil Hydrologic Groups may be found in Table 13, Soil Survey of Washington County, Oregon (SCS July 1982).

The following are important criteria/considerations for selection of CN values:

(1) Many factors may affect the CN value for a given land use. For example, the movement of heavy equipment over bare ground may compact the soil so that it has a lower infiltration rate and greater runoff potential.

(2) CN values can be area weighted when they apply to pervious areas of similar CN (within 20 CN points). However, high CN areas should not be combined with low CN areas (unless the low CN areas are less than 15 percent of the subbasin).

(3) Antecedent soil moisture values should be considered. Soil should be considered to be moist prior to the start of the precipitation event.

c) SCS Curve Number Equations:

The rainfall-runoff equations of the NRCS curve number method relate a land area's runoff depth (precipitation excess) to the precipitation it receives and to its natural storage capacity, as follows:

$Q_d = (P_R - 0.2S)^2 / (P_R + 0.8S)$ *for* $P_R > 0.2S$; *and*

$Q_d = 0$ *for* $P_R < 0.2S$

Where

Qd = runoff depth in inches over the area,
PR = precipitation depth in inches over the area,
S = potential maximum natural detention, in inches over the area, due to infiltration, storage, etc.

The area's potential maximum detention, S, is related to its curve number, CN:

$S = (1000/CN) - 10$

The computed runoff represents inches over the tributary area. Therefore, the total volume of runoff is found by multiplying Q_d by the area (with necessary conversions):

Total Runoff Volume (cubic-feet) = Q_d *(in) x A (ac) x 3,630 (cubic-feet/(ac-in))*

When developing the runoff hydrograph, the above equation for Qd is used to compute the incremental runoff depth for each time interval from the incremental precipitation depth given by the design storm hyetograph. This time distribution runoff depth is often referred to as the precipitation excess and provides the basis for synthesizing the runoff hydrograph.

d) Time of Concentration:

Time of concentration (T_c) is the time for runoff to travel from the hydraulically most distant point of the watershed to the point where the hydrograph is to be calculated. Travel time (T_t) is the time it takes water to travel from one location to another in a watershed. T_t is a component of time of concentration (T_c). T_c is computed by summing all the travel times for consecutive components of the drainage conveyance system. T_c influences the shape and peak of the runoff hydrograph.

(1) Sheet Flow

Sheet flow is flow over plane surfaces. It usually occurs in the headwater of streams. For sheet flow up to 300 feet, use the kinematics solution below to directly compute T_t:

Sheet Flow: $T_t = (0.93L^{0.6} \times n^{0.3}) / (I^{0.4} \times S^{0.3})$

Where T_t = travel time (min)
n = Manning's effective roughness coefficient for sheet flow
L = flow length (ft)
I = rainfall intensity in inches per hour
S = slope of hydraulic grade line (ft/ft)

Sheet flow shall not be used for distances exceeding 300-feet.

(2) Shallow Concentrated Flow

For slopes less than 0.005 ft/ft the following equations can be used:

a) For Unpaved Surfaces: $V = 16.1345\ (S)^{0.5}$
b) For Paved Surfaces: $V = 20.3282\ (S)^{0.5}$

Where: V = velocity in feet per second
S = Slope in ft/ft

(3) Channel Flow

A commonly used method of computing average velocity of flow, once it has measurable depth, is the following equation:

$$V = (1.486/n) \times R^{0.6} \times S^{0.5}$$

Where: V = velocity (ft/s)
n = Manning's roughness coefficient
S = slope of flow path (ft/ft)
R = area/perimeter

1.3 Water Quality Hydrology

Water Quality

The water quality storm is the storm required by regulations to be treated. The storm defines both the volume and rate of runoff.

a. Water Quality Storm: Total precipitation of 0.36 inches falling in 4 hours with a storm return period of 96 hours.

Water quality volume (WQV) is the volume of water that is produced by the water quality storm.

b. Water Quality Volume (WQV): 0.36-inches over 100-percent of the new impervious area.

$$\textit{Water Quality Volume (cf)} = \frac{0.36(\text{in}) \times \textit{Area (sf)}}{12\ (\text{in/ft})}$$

c. Water Quality Flow (WQF): The average design flow anticipated from the water quality storm.

$$\textit{Water Quality Flow (cfs)} = \frac{\textit{Water Quality Volume (cf)}}{14{,}4000\ \textit{Sec}}$$

or

$$\textit{Water Quality Flow (cfs)} = \frac{0.36(\text{in}) \times \textit{Area (sf)}}{12(\text{in/ft})(4\ \text{hr})(60\ \text{min/hr})(60\ \text{sec/min})}$$

2.0 HYDRAULICS

2.1 Catch Basins

Catch basins and inlets collect water from an adjacent ditch, gutter line, or pavement and convey the water to a storm sewer system or culvert. The inlet systems are to be designed in accordance with the following criteria:

a. Chapter 3 of CWS's Design and Construction Standards:

1) The following methodologies shall be used in locating catch basins and inlets:

(a) ODOT Hydraulics Manual.

(b) Hydraulic Engineering Circular No. 12 (FHWA-TS-84-202) Drainage of Highway Pavements.

2.2 Area Drains

The maximum acceptable intake flow rate for Type II area drains and ditch inlets are as follows:

Grate Angle 30°

Hydraulic Head (ft)*	0.5	1.0	1.5	2.0	2.5	3.0	4.0	5.0	7.0	10.0
Flowrates Q(cfs)**	2.0	5.6	10.3	11.9	13.3	14.6	16.8	18.8	22.3	26.6

* Measured from bottom of grate to headwater
** Cubic feet per second

2.3 Channel Protection

Open channels shall be designed to prevent scouring of the channel. Where rip rap protection is specified, rip rap protection shall be placed over a filter fabric base or a minimum 6" thick gravel base. The following provides additional design guidance in assisting the design Engineer, however, the design Engineer shall be responsible for the final design.

PROTECTION
FOR NEW CHANNEL CONSTRUCTION

Velocity at Design Flow (fps)				
Greater than	Less than or equal to	Required Protection	Thickness	Minimum Height above Design Water Surface
0	5	Vegetation Lining	N/A	0.5 ft.
5	8	Bioengineered lining* Or ODOT Class 50** Riprap	N/A 1.5 ft.	1 ft.
8	12	ODOT Class 200** Riprap	2.5 ft.	2 ft.
12	20	Slope Mattress, etc.***	Varies	2 ft.

* Bioengineered lining allowed for greater than 5 fps.

** ODOT Riprap Class in English Units

*** For high velocity channels, engineering calculations are to be submitted to the District or City for review.

2.4 Outfall Protection

Outfalls will be designed to prevent scouring at the outfall discharge and provide velocity reduction prior to discharge to the receiving channel. Where rip rap protection is specified, rip rap protection shall be placed over a filter fabric base or a minimum 6" thick gravel base. The following provides additional design guidance in assisting the design Engineer, however, the design Engineer shall be responsible for the final design.

ROCK PROTECTION AT OUTFALLS

Discharge Velocity at Design Flow (fps)			REQUIRED PROTECTION Minimum Dimensions				
			Type	Thickness	Width	Length	Height
0	to	5	ODOT Class 50** Riprap	1.5 ft.	Diameter + 6 ft.	8 ft. or 4x Dia., whichever is greater	Crown + 1 ft.
5	to	10	ODOT Class 200**	2.5 ft.	Diameter + 6 ft. or 3x Dia. Which-ever is greater	12 ft. or 4 x Dia., whichever is greater	Crown + 1 ft.
10	to	20	Designed System*	As required	As required	As required	Crown +1 ft.
20		NA	Engineered Energy Dissipater Required				

* For high velocity outfalls, engineering calculations are to be submitted to the District or City for review.

** ODOT Riprap Class in English Units

2.5 Culvert Design

Culverts provide for passage of water under or through obstructions placed across streams and drainageways. Culverts shall be designed to pass the required flows without compromising public safety or causing new or additional flooding.

For pipe systems or culverts that convey flows from or through sensitive areas, a local representative of Oregon Department of Fish and Wildlife (ODFW) or other applicable state or federal agency should be contacted to determine if fish passage is required and to identify site specific design criteria. Additionally, ODFW may require fish passage accommodations on any stream that has a history or the potential for fish production.

3.0 DRAINAGE REPORT

a. The Drainage Report shall be on 8-1/2" x 11" paper and maps shall be folded to 8-1/2" x 11" size unless another format is approved prior to submittal.

b. The Drainage Report shall be prepared by and bear the seal and original signature of a Professional Engineer registered in the State of Oregon and shall contain the following information:

1) Cover Sheet, including the project name, land use authority case file number, proponent's name, address and telephone number, Project Engineer, and date of submittal.

2) Table of Contents, with the page numbers for each section of the report, including exhibits, appendices, and attachments.

3) Vicinity Map.

4) Project Description: Describe the type of permit(s) for which the proponent is applying, the size and location of the project site, address or parcel number and legal description of the property, property zoning. Also describe other permits required (e.g. Corps of Engineers 404 Fill Permit, etc). Describe the project, including proposed land use, proposed site improvements, proposed construction of impervious surfaces, proposed landscaping, and special circumstances.

5) Existing Conditions:

a) Describe existing site conditions and relevant hydrological conditions including but not limited to:

(1) Project site topography;

(2) Land cover and land use;

(3) Abutting property land cover and land use;

(4) Offsite drainage to the property;

(5) Natural and constructed channels;

(6) Sensitive areas, wetlands, creeks, ravines, gullies, steep slopes, springs and other environmentally sensitive areas on or adjacent to the project site.

b) General soils conditions present within the project site, using SCS soil designations.

c) Points of discharge for existing drainage from the project site.

d) Include references to relevant reports such as basin plans, flood studies, groundwater studies, wetland designation, watershed plans, subbasin master plans, sensitive area designation, environmental impact statements, water quality reports, or other relevant documents. Where such reports impose additional conditions on the Proponent, those conditions shall be included in the report.

e) Soils Report(s), where applicable.

f) Hydrologic Analysis

g) Basin Map(s), showing boundaries of project, any offsite contributing drainage basins, onsite drainage basins, approximate locations of all major drainage structures within the basins, and depicting the course of stormwater originating from the subject property and extending all the way to the closest receiving body of water. Reference the source of the topographic base map (e.g. USGS), the scale of the map, and include a north arrow.

h) Drainage Basin Description: Describe the drainage basin(s) to which the project site contributes runoff, and identify the receiving waters for each of these drainage basins.

i) Developed Site Drainage Conditions: Describe the land cover resulting from the proposed project; describe the potential stormwater quantity and quality impacts resulting from the proposed project; describe the proposal for the collection and conveyance of site runoff from the project site, for the control of any increase in stormwater quantity resulting from the project, and for the control of stormwater quality.

j) Description of upstream basins, identifying any sources of runoff to the project site. This should be based on field investigation. Any existing drainage or erosion issues upstream that may have an impact on the proposed development should be noted.

k) Downstream analysis

l) Hydraulic Design Computations, supporting the design of all proposed stormwater conveyance, quantity and quality control facilities, and verifying the capacity of existing and proposed drainage facilities.

These computations may include capacity and backwater analysis required either as part of the proposed drainage design or as part of the downstream drainage investigation, and flood routing computations required for the design of detention/retention storage facilities, for wetland impact analysis, or for floodplain analysis. A description on how the stormwater system will function during the water quality storm, 2-year storm, 25-year storm and the 100-year storm shall also be included.

m) Maintenance and Operation Manual: Required for privately owned and maintained stormwater quantity and quality control facilities. This manual will be an attachment to the maintenance covenant.

n) Appendices: Shall include technical information as necessary.

4.0 DRAINAGE PLANS

a. It is the responsibility of the Engineer to ensure that engineering plans are sufficiently clear and concise to construct the project in proper sequence, using specified methods and materials, with sufficient dimensions to fulfill the intent of the design guidelines contained in this document.

b. All Engineered Drainage Plans shall be stamped by a professional engineer registered in the State of Oregon. The Drainage Plan shall contain the following:

1) At least one sheet will contain a plan view of the entire project site. In the event the project site is sufficiently large that detailed drainage plans on any given sheet do not encompass the entire project site, then a sheet containing the plan view of the entire site must serve as an index to subsequent detailed plan sheets.

2) Plans shall include a topographic map showing existing conditions for the site, including:

a) Existing topography for the site.

b) Adjacent streets, including street names.

c) Existing utilities, including franchised utilities located above or below ground and drainage facilities that transport surface water onto, across, or from the project site. Existing drainage pipes, culverts, and channels shall include the invert or flowline elevations.

d) Existing environmentally sensitive areas (e.g. ravines, swales, steep slopes, springs, wetlands, creeks, lakes, etc.). For natural drainage

features, show direction of flow, drainage hazard areas, and 100-year flood plain boundary (if applicable).

3) Plans for proposed drainage improvements shall include the following:

   a) Finished grades. Show the extent of cut and fill by existing and proposed contours, profiles or other designations.

   b) Proposed structures including roads and road improvements, parking surfaces, building footprints, walkways, landscape areas, etc.

   c) Proposed utilities, showing exact line and grade of all proposed utilities at crossings with the proposed drainage system.

   d) Setbacks from environmentally sensitive areas.

   e) Proposed drainage structures, including pipes, open channels, culverts, ponds, vaults, biofiltration swales, infiltration facilities, outfalls, riprap treatment, energy dissipaters, etc.

   f) Plan and profile of drainage conveyance facilities will include the following information: pipe sizes, pipe types and materials, lengths, slopes, type of structure (e.g. Type 2 CB), location of structures, invert elevations in/out of structures, and top elevations of structures. Notes shall be included referencing details, cross-sections, profiles, etc.

   g) Indicate any proposed phasing of construction.

4) A detailed grading plan will be provided for all open stormwater quantity control and/or quality control facilities. This plan shall include the following:

   a) Existing ground contours (screened) and proposed ground contours at a minimum of a 2-foot contour interval. Slopes steeper that 6 horizontal to 1 vertical shall be identified.

   b) Location of top and toe of slope.

   c) Limits of embankment designed to impound water.

   d) Location of all drainage structures as well as any other piped utilities in vicinity.

   e) Flow route of the secondary/emergency overflow system.

   f) Maintenance access, as applicable.

5) A detailed landscape plan will be provided for open stormwater quantity control and/or quality control facilities. This plan shall include the following:

a) Final ground contours at a minimum of a 2-foot contour interval.

b) Location of top and toe of slope.

c) Maximum water surface elevation.

d) Location of all drainage structures as well as any other piped utilities in vicinity (screened).

e) Limits of areas to receive amended topsoil.

6) Cross sections shall be provided for at least the following:

a) Detention/retention ponds (including parking lot ponds and other multi-use facilities), wet ponds and sediment ponds. This cross section(s) shall graphically illustrate:

(1) The design maximum water surface for the 2-year and 25-year design storms.

(2) The proposed dead storage water surface (as applicable).

(3) Pavement section or amended soil section as applicable.

b) Proposed ditches and swales, including vegetated swales.

APPENDIX B:
WATER QUALITY & QUANTITY
FACILITY DESIGN

1.0 GENERAL REQUIREMENTS FOR WATER QUALITY AND QUANTITY FACILITIES

1.1 Erosion Protection

a. Inlets to water quality and quantity facilities shall be protected from erosive flows through the use of an energy dissipater or rip rap stilling basin of appropriate size based on flow velocities. Flow shall be evenly distributed across the treatment area.

b. All exposed areas of water quality and quantity facilities shall be protected using coconut or jute matting. Coconut matting or high density jute matting (Geojute Plus or approved equal) shall be used in the treatment area of swales and below the WQV levels of ponds. Low density jute matting (Econojute or approved equal) may be used on all other zones.

1.2 Vegetation

a. Vegetation shall be in accordance with the Appendix D: Landscape Requirements.

b. No invasive species shall be planted or permitted to remain within the facility which may affect its function, including, but not limited to the following:

1. Himalayan blackberry (Rubus discolor)
2. Reed canarygrass (Phalaris arundinacea)
3. Teasel (Dipsacus fullonum)
4. English Ivy (Hedra helix)
5. Nightshade (Solanum sp.)
6. Clematis (Clematis ligusticifolia and C. vitabla)
7. Cattail (Typhus latifolia)
8. Thistle (Cirsium arvense and C. vulgare)
9. Scotch Broom (Cytisus scoparius)

1.3 Fencing

a. Delineation fencing shall be required around the facility and/or the tract containing the facility. Unless otherwise approved by the District, the District shall require a 4-foot high, vinyl-clad chain link fence conforming to CWS Standard Drawing No. 1005.

b. The fence shall include a 12-foot wide lockable gate for maintenance access conforming to CWS Standard Drawing No. 1005.

1.4 Access

a. General Access Requirement

Access roads shall be provided for maintenance of all water quality and quantity facilities. The following criteria are considered to be the minimum required for facilities maintained by the District. Other permitting jurisdictions may have more restrictive requirements. If the design Engineer anticipates that any of the requirements will not be met due to the configuration of the proposed development, the design Engineer is advised to meet with District staff to gain approval for the deviation prior to submittal.

b. Standard Road Design

1) The road section shall be three (3) inches of class "C" asphaltic concrete; over two (2) inches of ¾"-0" compacted crushed rock; over six (6) inches of 1½"-0" compacted crushed rock; over subgrade compacted to 95-percent AASHTO T-99; or, the design engineer may submit an alternate design certified as capable of supporting a 30-ton maintenance vehicle in all weather conditions.

2) Strengthened sidewalk sections shall be used where maintenance vehicles will cross.

3) Maximum grade shall be 10-percent with a maximum 3-percent cross-slope.

4) Minimum width shall be 12 feet on straight runs and 15 feet on curves.

5) Curves shall have a minimum 40-foot interior radius.

6) Access shall extend to within 10-feet of the center of all structures unless otherwise approved by the District/City.

7) A curb or other delineator shall be provided at the edge of the road unless otherwise approved.

8) The minimum side slope for road embankments shall be 2:1.

9) A vehicle turnaround shall be provided when the access road exceed 40' in length.

c. Alternate Access Road

An alternate access road design meeting the requirements of this section may be approved by the District for facilities in which access is required for general maintenance and long term care of the facility, but where there is no structure, as determined by the District, requiring regular maintenance.

1) The road section shall meet the requirements of 1.4.b.1) or an alternate section certified as capable of supporting AASHTO HS-20 loading.

2) As an alternative to the requirements of 1.4.c.1), a concrete grid paver surface may be constructed by removing all unsuitable material, laying a geotextile fabric over the native soil, placing pavers, filling the honeycombs/grids with soil, and planting appropriate grasses.

3) Strengthened sidewalk sections shall be required.

4) Maximum grade shall be 20-percent with a maximum 3-percent cross-slope.

5) Minimum finished width shall be 12 feet.

6) A curb or other delineator shall be provided at the edge of the road unless otherwise approved.

7) The minimum side slope for road embankments shall be 2:1.

8) A vehicle turnaround shall be provided when the access road exceed 40' in length.

2.0 WATER QUALITY FACILITY DESIGN

This section presents methodology for designing water quality facilities.

2.1 Water Quality Volumes and Flows

(Reproduced from Appendix A: Hydrology and Hydraulics; Section 1)

The water quality storm is the storm required by regulations to be treated. The storm defines both the volume and rate of runoff.

a. Water Quality Storm: Total precipitation of 0.36 inches falling in 4 hours with a storm return period of 96 hours.

b. Water quality volume (WQV) is the volume of water that is produced by the water quality storm.

c. Water Quality Volume (WQV): 0.36-inches over 100-percent of the new impervious area.

$$\textit{Water Quality Volume (cf)} = \frac{\textit{0.36(in) x Area (sf)}}{\textit{12 (in/ft)}}$$

d. Water Quality Flow (WQF): The average design flow anticipated from the water quality storm.

$$\textit{Water Quality Flow (cfs)} = \frac{\textit{Water Quality Volume (cf)}}{\textit{14,400 Sec}}$$

Or

$$\textit{Water Quality Flow (cfs)} = \frac{\textit{0.36(in) x Area (sf)}}{\textit{12(in/ft)(4 hr)(60 min/hr)(60 sec/min)}}$$

2.2 Pretreatment

a. Pretreatment Required

Sheet flow of impervious surfaces into water quality facilities will not be allowed without pretreatment. Incoming flows to the water quality facility must be pretreated using a water quality manhole in accordance with section 2.3 or other pre-treatment method as approved by the District/City. Other methods of pretreatment may include proprietary devices, filter

strip, trapped catch basin, or other methods as approved by the District/City.

b. Proprietary Pre-Treatment Devices

1. The use of proprietary pre-treatment devices are permitted on a case by case basis with approval by the District or City

2. The devices will be sized in accordance with the manufacturer's recommendations; however, the minimum treatment flow must be the water quality flow.

3. Technical submittals from the manufacturer are required, including hydraulic design criteria, particulate removal efficiency, and maintenance requirements and schedule.

2.3 Water Quality Manholes

a. Hydraulic Criteria:

1. Minimum Design Flow: Water Quality Flow
2. Upstream flow splitter may be used to bypass conveyance flows in excess of the Water Quality flow.

b. Design Criteria:

1. Shall conform to CWS Standard Drawing No. 515 or an equivalent detail approved by the District/City.
2. Minimum Manhole Diameter: 60-inch
3. Maximum size of incoming pipe: 18-inch
4. Sump Depth: No deeper than 5 feet from invert out to bottom of sump
5. Volume of sump: 20 cubic feet/ 1.0-cfs of flow into the water quality manhole, up to the 25-year flow. Flow calculations shall include the effect of an upstream flow splitter.
6. Maintain a 3-foot clear access zone between the inside structure wall and the interior outlet structure.
7. Orient access to structure in a clear zone.

2.4 Walls in Water Quality Facilities

a. Walls are not allowed in the treatment areas of any water quality facility.

b. Walls that are 4 feet or higher or that are periodically inundated must meet all of the following criteria:

1) Be approved by a licensed structural or geotechnical engineer;
2) The District shall not have maintenance responsibility for the wall. The party responsible for maintenance of the walls within the tract shall be clearly documented on the plat or in alternate form as approved by the District.

3.0 WATER QUALITY TREATMENT FACILITES

3.1 Vegetated Swale

a. Hydraulic Design Criteria:

1. Design Flow: Water Quality Flow
2. Minimum Hydraulic Residence Time: 9 minutes
3. Maximum Water Design Depth: 0.5-feet
4. Minimum Freeboard: 1.0-foot (for facilities not protected from high flows)
5. Manning "n" Value: 0.24
6. Maximum Velocity: 2.0-fps based on 25-year flow

b. Design Criteria:

1. Provide an energy dissipater at the entrance to swale, with a minimum length of 4-feet. It will be designed to reduce velocities and spread the flow across the treatment cross section.
2. The use of intermediate flow spreaders maybe required.
3. Minimum Length: 100-feet
4. Minimum Slope: 0.5-percent
5. Minimum Bottom Width: 2-foot
6. Maximum Treatment Depth (measured from top of gravel): 0.5-feet
7. Maximum Side Slope:
   a) In Treatment Area: 4H:1V
   b) Above Treatment Area: 2.5H:1V
8. The treatment area shall have 2"-¾" river run rock placed 2.5 to 3 inches deep on high density jute or coconut matting over 12 inches of topsoil or base stabilization method as approved by the

District/City. Extend river rock, topsoil, and high density jute or coconut matting to top of treatment area (or WQV level). Extend topsoil and low density jute matting to the edge of water quality tract or easement area.

9. Provide an approved outlet structure for all flows.

10. Where swales wrap 180-degrees forming parallel channels, freeboard must be provided between each of the parallel channels. A 1-foot (above ground surface) wall may be used above the treatment area to provide freeboard while enabling a narrower system. As an alternative, a soil-based berm may be used. The berm shall have a minimum top width of 1 foot and 2.5:1 side slopes.

11. Where swales are designed with ditch inlets and outlet structures and design of maintenance access to such structures may be difficult due to swale location, swales may be designed as flow-through facilities with unsumped structures. Maintenance access to one end of the facility will still be required.

3.2 Extended Dry Basin

a. Hydraulic Design Criteria:

1. Permanent Pool Depth: 0.4-feet
2. Permanent pool is to cover the entire bottom of the basin.
3. Minimum Water Quality Detention Volume: 1.0 x Water Quality Volume (WQV)
4. Water Quality Drawdown Time: 48 hours
5. Orifice Size: USE: $D = 24 * [(Q/ (C[2gH]^{0.5}) / \pi]^{0.5}$

   Where: *D (in) = diameter of orifice*

   $Q(cfs) = WQV(cf) /(48*60*60)$

   $C = 0.62$

   H(ft) = 2/3 x temporary detention height to centerline of orifice.
6. Maximum Depth of Water Quality Pool (not including Permanent Pool): 4-feet or as limited by issuing jurisdiction.
7. Provide an emergency spillway sized to pass the 100-year storm event or an approved hydraulic equivalent. Emergency spillway to be located in existing soils when feasible and armored with riprap or other approved erosion protection extending to the toe of the embankment.

b. Design Criteria:

1. Minimum of 2 cells, with the first cell (forebay) at least 10% of surface area. The forebay shall also constitute 20-percent of the treatment volume. Where space limits multi-cell design, use one cell with a forebay at the inlet to settle sediments and distribute flow across the wet pond.
2. Inlet and outlet structures shall be designed to avoid direct flow between structures without receiving treatment (i.e. short circuiting of flow).
3. Minimum Bottom Width: 4-feet
4. Maximum Side Slopes in Basin Treatment Area: 3H:1V
5. Minimum Freeboard: 1-foot from 25-year design water surface elevation.
6. The treatment area shall have high density jute or coconut matting over 12 inches of topsoil or base stabilization method as approved by the District/City. If required by the District, 2"-¾" river run rock shall be placed 2.5 to 3 inches deep in areas where sustained flow is anticipated to occur. Extend river rock (if required), topsoil, and high density jute or coconut matting to top of treatment area (or WQV level). Extend topsoil and low density jute matting to the edge of water quality tract or easement area
7. Provide an approved outlet structure for all flows.
8. The Engineer shall certify that the pond storm sewer design is in compliance with Chapter 3 of this Resolution and Order and that at normal design water surface that the upstream storm sewer will not be in a surcharged condition for longer than 24 hours

3.3 Constructed Water Quality Wetland

a. Hydraulic Design Criteria:

1. Permanent Pool Volume: 0.55 x Water Quality Volume (WQV)
2. Water Quality Detention Volume: 1.0 x Water Quality Volume (WQV)
3. Water Quality Drawdown Time: 48 hours
4. Orifice Size: USE: $D = 24 * [(Q/ (C[2gH]0.5) / \pi] 0.5$

Where: *D (in) = diameter of orifice*
*Q(cfs) = WQV(cf) /(48*60*60)*
C = 0.62

H(ft) = 2/3 x temporary detention height to centerline of orifice.

5. Maximum Depth of Permanent Pool: 2.5-feet or as limited by issuing jurisdiction

6. Maximum velocity through the wetland should average less than 0.01-fps for the water quality flow. Design should distribute flows uniformly across the wetland.

7. Provide an emergency spillway sized to pass the 100-year storm event or an approved hydraulic equivalent. Emergency spillway to be located in existing soils when feasible and armored with riprap or other approved erosion protection extending to the toe of the embankment.

8. Provide for a basin de-watering system with a 24-hour maximum drawdown time.

b. Design Criteria:

1. Minimum of 2 cells, with the first cell (forebay) at least 10% of surface area. The forebay shall also constitute 20-percent of the treatment volume. Where space limits multi-cell design, use one cell with a forebay at the inlet to settle sediments and distribute flow across the wet pond.

2. Permanent pool depth to be spatially varied throughout wetland.

3. Provide a perimeter zone 10 to 20-feet wide, which is inundated during storm events.

4. Maximum Side Slopes for Wetland Planting: 5H:1V

5. Maximum Side Slopes for Non-Wetland Planting: 3H:1V

6. Overexcavate by a minimum of 20-percent to allow for sediment deposition.

7. Minimum Freeboard: 1-foot from 25-year design water surface elevation.

8. Provide an approved outlet structure for all flows.

3.4 Other Water Quality Treatment Facilities

The use of other forms of water quality treatment is allowed with the approval of the District or City. However, the applicant must provide evidence of the ability of the facility to meet the District's performance criteria and long term maintenance requirements.

Grass swales will not be allowed.

4.0 WATER QUANTITY FACILITY DESIGN

4.1 Hydraulic Design Criteria:

a. Detention design shall be assessed by dynamic flow routing through the basin. Documentation of the proposed design shall be included in the drainage report. Acceptable analysis programs include:

1. HYD;
2. HEC-1;
3. HEC-HMS;
4. SWMM;
5. HYDRA;
6. Others as approved.

b. Peak runoff rates shall not exceed pre-development rates for the specific range of storms.

c. A pond overflow system shall provide for discharge of the design storm event without overtopping the pond embankment or exceeding the capacity of the emergency spillway. Vortex valve discharge control should be considered to optimize effective pond volume.

d. Provide an emergency spillway sized to pass the 100-year storm event or an approved hydraulic equivalent. Emergency spillway to be located in existing soils when feasible and armored with riprap or other approved erosion protection extending to the toe of the embankment.

4.2 Design Criteria:

a. The facility can be a combined water quality and quantity facility provided it meets all relevant criteria.

b. Interior side slopes up to the Maximum Water Surface: 3H:1V

c. If interior slopes need to be mowed – maximum side slope: 4H:1V

d. Maximum Exterior Side Slopes: 2H:1V, unless analyzed for stability by a geotechnical engineer.

e. Over excavate by a minimum of 20-percent to allow for sediment deposition.

f. Minimum Freeboard: 1-foot from 25-year design water surface elevation.

g. Provide an approved outlet structure for all flows.

h. Certain situations require use of multiple orifice plates to achieve desired outflow rates. Standard Detail No. 544 provides an alternative second structure to Standard Detail No. 545.

4.3 Walls in Water Quantity Facilities

a. Retaining walls may serve as pond walls if the design is prepared and stamped by a registered professional engineer and a fence is provided along the top of the wall. At least 25% of the pond perimeter will be vegetated to a maximum side slope of 3:1.

b. Walls that are 4 feet or higher must meet all of the following criteria:

1) Be approved by a licensed structural or geotechnical engineer;

2) The District shall not have maintenance responsibility for the wall. The party responsible for maintenance of the walls within the water quantity tract or easement shall be clearly documented on the plat or in alternate form as approved by the District.

APPENDIX C:
NATURAL RESOURCE ASSESSMENTS

1.0 INTRODUCTION

This Appendix presents methodologies for determining the location, size, and condition of Sensitive Areas, Vegetated Corridors, and steep slopes in project areas, as well as the definitions and data required for these determinations. The most current versions of the following maps shall be a reference for performing the assessment and analysis.

1) Clean Water Services Prescreen Maps

2) The National Wetlands Inventory Maps

3) District Stream and Drainage Maps

4) Locally adopted studies or maps, including but not limited to Local Wetland Inventory maps, NRCS Soil Survey Map

2.0 PERSONS QUALIFIED TO PERFORM ASSESSMENTS

a. The property owner or an authorized representative of the property owner may complete the Sensitive Area Assessment and certification.

b. Sensitive Area Assessments should be conducted by a professional familiar with wetland and other natural resource assessments.

c. The Simplified Site Assessment outlined in Section 4.1 need not be professionally prepared, but should accurately and clearly show the required information.

d. The District may reject any Sensitive Area Assessment or Simplified Site Assessment that does not meet generally accepted standards of quality.

e. The geotechnical analysis, if required, shall be conducted by a professional engineering geologist or geotechnical engineer who will stamp the required report.

3.0 SCOPE OF ASSESSMENT

a. Sensitive Areas and their Vegetated Corridors generally do not follow property boundaries. To ensure that the Sensitive Areas are provided with proper protections, the assessment requires investigation extending 200 feet onto the adjoining properties.

b. The applicant shall attempt to gain site access to adjacent properties from the property owner or an authorized representative of the property owner. If property owner/authorized representative denies access the applicant shall use off-site delineation methods including use of mapping information, aerial photographs for the area, and visual observation from the property boundary to perform the assessment.

4.0 ASSESSMENT METHOD

4.1 Simplified Site Assessment Method

a. The Simplified Site Assessment Method applies only to development which is not likely to adversely impact the Water Quality Sensitive Area and which meets all of the following criteria:

1. Adds less than 500 square feet of impervious surface;
2. Does not encroach closer to the Sensitive Area than existing development on the property; and
3. Is not located on a slope greater than 25%.

b. Prior to submitting a land use application or obtaining a building permit, the applicant shall submit the following information to the District for review.

1. Written description of the site and proposed activity, including:
   a. Landscape setting, topography, land uses and site alterations
   b. Description of proposed development activity
   c. General description of the Sensitive Area and Vegetated Corridor

2. Site plan of the entire property, including the following:
   a. Property lines and dimensions
   b. Location of proposed development activity
   c. Existing and proposed conditions for property and surrounding area within 200'
   d. Location and dimensions of roads, driveways, utilities, parking areas, and building footprints
   e. Location and dimensions of yards and/or cultivated areas
   f. Locations of existing Sensitive Areas (streams, ponds, wetlands, etc.), Storm Water Infrastructure and drainage ditches

g. Locations, boundaries, and conditions of the Vegetated Corridors including plant communities, contours, data points and notation of slopes greater than 25%
h. Site plan shall be at a scale of one inch equals 50 feet or less (1"=50')

3. Photographs of the site, labeled and keyed to the site plan.

4. Sensitive Area Certification Form

4.2 Standard Site Assessment Method

a. The Standard Site Assessment Method shall be used for development activities not meeting the criteria of 4.1.a.

b. **Step 1:** Conduct a reconnaissance of the project area and complete the Sensitive Area Certification Form.

1. Determine the presence or absence of Water Quality Sensitive Areas on site or within 200 feet on adjacent property as defined in Chapter 3 of CWS' Design and Construction Standards.

2. If no Water Quality Sensitive Areas are discovered, then submit Sensitive Areas Certification Form along with supporting documentation of existing conditions.

3. If Sensitive Areas are found, continue to Step 2.

c. **Step 2:** Delineate the boundaries of the Sensitive Area.

1. Wetlands:

a) Delineate boundaries using the methods described in the 1987 US Army Corps of Engineers Wetland Delineation Manual. Technical Report Y-87-1 from the Waterways Experiment Station is available at: http://www.wes.army.mil/el/wetlands/pdfs/wlman87.pdf

b) Survey and map all wetland boundaries on the site base map.

2. Intermittent and/or perennial streams:

a) Identify whether the stream is perennial or intermittent, as defined in Chapter 1. Samples to identify intermittent flow shall be representative of the project reach. Streams are considered perennial until proven intermittent with adequate research and field documentation (photos, field data), following District methodology as outlined below. Applicants are advised to notify the District before conducting intermittent stream determinations. The District will attempt to provide assistance in this process for verification and will continually update the District Intermittent Streams Maps.

Once a stream has been determined to be intermittent, the District shall add the information to the Intermittent Stream Map. Stream segments upstream of an intermittent determination shall be assumed and mapped to be intermittent. The District reserves the right to request site specific information to field verify status, and update Intermittent Stream maps as appropriate.

Field investigation for intermittent stream determinations is most appropriately done during the dry season, i.e. July 1-October 30. If the applicant attempts to make a determination of intermittence during the wet season, the applicant should consider all other available data (historic photos, data, reports, eyewitness accounts, etc.). The District shall review the available data and, if approved, the intermittent determination shall be considered preliminary until status can be definitively confirmed through one of the field methodologies described below.

A stream shall be determined to be intermittent through one of the following methods:

Method 1

The stream channel is dry (without visible flow or standing water) for a period of 30 consecutive days during a year with wet to average precipitation patterns[1]. This method requires a minimum of two samples per 100 feet of stream length, collected at the beginning and end of the 30 day period, with supporting data (including maps with photos keyed to each sample location), indicating that the stream is dry. During a year with a dry precipitation pattern, all sampling must be completed prior to August 15.

[1] See Table 1: Precipitation for Use in Determining Perennial and Intermittent Flow Status.

If standing water is present at the first site visit, Method 2 shall be used, or the applicant must wait until the project reach is completely dry to start the 30 day sampling period.

Method 2

The channel must not have saturated[2] soil in the upper 12 inches, during a year with wet to average precipitation patterns. This method requires representative samples (one per 100 feet of stream length) on only one date. Samples shall include supporting data (including soil texture, level of saturation, and maps with photos keyed to each sample location). During a year with a dry precipitation pattern, all sampling must be completed prior to August 15.

b) For all intermittent and/or perennial streams with defined channels, delineate Sensitive Area boundaries by identifying the top of bank of the defined channel, or the water surface elevation of a 2-year, 24-hour design storm event.

c) For all streams without defined channels, delineate Sensitive Area boundaries by identifying the surface elevation of a 2-year 24-hour design storm event. If determining the surface elevation of a 2-year, 24-hour design storm event is not possible, then the outside edge of the stream Sensitive Area is determined by identifying the areal extent of:

1) Soil saturation within the upper twelve inches of the surface;

2) Water marks on fixed objects (vegetation, buildings, etc.);

3) Drift lines (deposited waterborne twigs, litter, etc.); or;

4) Waterborne sediment deposits on the soil surface or fixed objects (vegetation, buildings, etc.);

5) Use the indicator that provides the greatest areal cover.

d) For streams draining 10 to 50 acres without a defined channel, and where there are no other Sensitive Areas such as

[2] Saturated: a condition in which all voids (pores) between soil particles are filled with water.

wetlands, the edge of the Sensitive Area shall be the centerline of the natural drainage swale.

Table 1: Precipitation for Use in Determining Perennial and Intermittent Flow Status

Portland Airport	Average Monthly	10th Percentile (Dry Year)	90th Percentile (Wet Year)
JAN	5.4	2.0	8.5
FEB	4.3	1.7	7.7
MAR	3.7	1.9	5.6
APR	2.4	1.0	3.8
MAY	2.2	0.9	3.7
JUN	1.5	0.4	2.8
JUL	0.6	0.0	1.2
AUG	0.9	0.0	2.1
SEP	1.6	0.1	3.5
OCT	3.1	1.2	5.4
NOV	5.5	2.2	9.3
DEC	5.9	2.6	9.4
ANNUAL	36.9	29.9	43.9

Precipitation values from the National Weather Service web page. Daily and monthly data are available at http://www.wrh.noaa.gov/Portland/climate/

- 10th and 90th percentile are calculated using statistical analysis on all historical data available for the gage site at the Portland Airport (1938 - 2001). If other long-term rain data is used, provide location and statistical analysis with submittal

To determine status of the precipitation levels, review the previous Water Year (October 1 – September 30) to date. For determinations conducted during the month of October, use the previous complete Water Year to determine precipitation levels.

2. Springs:

   a) For springs with defined channels, delineate Sensitive Area boundaries by identifying the top of the bank of the defined channel. Determine the outside edge of the spring emergence by the extent of:

      1) Soil saturation within the upper twelve inches of the surface;

2) Water marks on fixed objects (vegetation, buildings, etc.);

3) Drift lines (deposited waterborne twigs, litter, etc.); or

4) Waterborne sediment deposits on the soil surface or fixed objects (vegetation, buildings, etc.);

5) Use the indicator that provides the greatest areal cover.

b) Survey and map all Sensitive Area boundaries on site base map.

3. Natural lakes, ponds, or in-stream impoundments:

a) Delineate the outside edge of the Sensitive Area boundary by identifying the areal extent of:

1) Shoreline vegetation;

2) Water marks on fixed objects (vegetation, structures, etc.);

3) Drift lines (deposited waterborne twigs, litter, etc.); or

4) Waterborne sediment deposits on the soil surface or fixed objects (vegetation, buildings, etc.);

5) Use the indicator that provides the greatest areal cover.

b) Survey and map all Sensitive Area boundaries on site base map.

d. **Step 3:** Determine the Vegetated Corridor width for each Sensitive Area identified.

1. Follow procedures outlined in Chapter 3 of the Standards for determining Vegetated Corridor width.

2. Stake, survey, and map the boundaries of the Sensitive Areas and the Vegetated Corridors on the project site and adjacent properties within 200' of the property line on the base map.

e. **Step 4:** Determine the existing Vegetated Corridor condition.

1. Identify the plant community types present in Vegetated Corridor.

a) Traverse the Vegetated Corridor in order to determine the number and area covered by each plant community present. A plant community is defined as a grouping of plants that often occur together growing in a uniform habitat.

b) Sketch the location of each plant community on a base map.

2. Select representative sample points.

a) A representative sample point is an area within a plant community in which the visually determined characteristics best represent the plant community as a whole.

b) Mark the location of the sample point(s) on the base map.

c) Establish at least one sample point per acre per community type. All communities must be sampled.

3. Characterize each plant community type.

a) At the sample point, visually determine and document the area covered by all species providing greater than 5 percent cover within the plot boundary.

b) Use a 10-foot radius plot for herbs (non-woody vegetation) and a 30-foot radius plot for woody vegetation.

c) Plot boundaries may be adjusted to ensure that only one plant community is represented in a plot.

4. Determine cover by native species, invasive species, and noxious species.

   a) For each community type, determine the cover provided by both native species and by invasive species and noxious species.

   b) Average the cover estimates for communities with more than one sample plot.

   c) Native species as listed in the most current version of Metro or local Native Plant List, whichever is more comprehensive.

   d) Noxious species are those found in the most current version of Oregon Department of Agriculture Noxious Weed List and Portland Plant List.

   e) Invasive species are limited to Himalayan or evergreen blackberry (*Rubus discolor, lacinatus*), reed canarygrass (*Phalaris arundinacea*), teasel (*Dipsacus fullonum*), Canada or bull thistle (*Cirsium sp.*), Scotch broom (*Cytsus scoparius*), purple loosestrife (*Lythrum salicaria*), Japanese knotweed (*Polygonium cuspidatum*), morning glory (*Convolvulus sp.*), giant hogweed (*Heracleum mantegazzianum*), English ivy (*Hedra helix*), nightshade (*Solanum* sp.), and clematis (*Clematis ligusticifolia* and *C. vitabla*)

5. Determine existing Vegetated Corridor condition for each plant community.

   For each community determine if the Vegetated Corridor within that community is in Good, Marginal, or Degraded Condition as per the Standards (Chapter 3, Table 3.2).

   b) If more than one condition (good, marginal, or degraded) exists within a Vegetated Corridor, indicate the condition of each plant community within the Vegetated Corridor on the site base map.

   c) Transfer results to base map.

   d) Example of a Vegetated Corridor condition assessment:

A one-acre Vegetated Corridor has two community types: Community A, a Douglas fir forest covering about 90 percent of the corridor; and Community B, a Himalayan blackberry dominated community over the remaining 10 percent, as described in the following table.

Community A (90% of Corridor)	Cover		Community B (10% of Corridor)	Cover
Douglas Fir*	70		Oregon White Oak*	10
Vine Maple*	10		Himalayan Blackberry**	50
Sword Fern*	10		Common Strawberry*	35
English Ivy **	5		Tall Fescue	45
Perennial Ryegrass	20			
% Cover by Natives	90		% Cover by Natives	45
% Tree Canopy	70		% Tree Canopy	10
% Invasive/Noxious	5		% Invasive/Noxious	50

* = Native species ** = Invasive species or noxious weed

- Vegetated Corridor Condition Community A:

  1) Greater than 80 percent cover by native trees, shrubs, and groundcovers;
  2) Greater than 50 percent tree canopy cover;
  3) Less than 10 percent cover by invasive species and noxious weeds;
  4) Vegetated Corridor Condition = Good.

- Vegetated Corridor Condition Community B:

  1) Less than 50 percent cover by native trees, shrubs, and groundcovers;
  2) Less than 25 percent tree canopy cover;
  3) Greater than 10 percent cover by invasive species and noxious weeds;
  4) Vegetated Corridor Condition = Degraded.

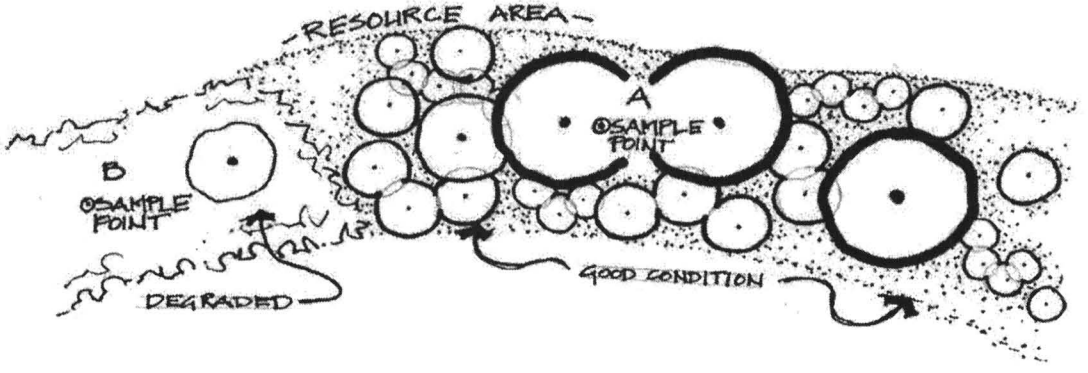

f. **Step 5:** Additional Assessments

1. If development is proposed closer than 35' from the break in slope at the top of ravine, a geotechnical analysis is required. The geologist or geotechnical engineer shall provide a stamped report containing:

   a) Description and map of soil type and erodibility conditions of the slope.

   b) Documentation of evidence of potential historic slope movement, if any.

   c) Limits of impact to the slope necessary for it to remain stable.

   d) Estimation of weight that can be applied to the top of a slope and remain stable.

   e) Other relevant information deemed appropriate to include.

2. If a Tier 2 Alternatives Analysis is proposed, a functional assessment is required. The report shall be prepared using methodology outlined in Oregon Division of State Lands Hydrogeomorphic (HGM) approach of assessment for wetland and riparian functions.

g. **Step 6:** Prepare the Natural Resources Assessments Report

1. Draft a report documenting the site and adjacent property Sensitive Area, Vegetated Corridor condition, and slope.

2. Include a description of each plant community.

3. Include copies of written data assessment forms for Vegetated Corridor analysis and wetland delineation and show on the base map.

4. Include a base map site plan for the entire property in the report and photos of representative features on site and adjacent property. The site plan shall include the following:

   a) Property lines and dimensions

b) Location of proposed development activity

c) Existing and proposed conditions for property and surrounding area within 200'

d) Location and dimensions of roads, driveways, utilities, parking areas, and building footprints

e) Location and dimensions of yards and/or cultivated areas

f) Locations, boundaries, and conditions of existing Sensitive Areas (streams, ponds, wetlands, etc), Storm Water Infrastructure, and drainage ditches

g) Locations, boundaries, and conditions of the Vegetated Corridors including plant communities, contours, data points and notation of slopes greater than 25%

h) Site plan shall be at a scale of one inch equals 50 feet or less (1"=50')

Clean Water Services
Our commitment is clear.

Sensitive Areas Certification Form

Property Owner

Name

Address

City/State/Zip

Telephone	Fax

E-mail

Authorized Agent

Name

Address

City/State/Zip

Telephone	Fax

E-mail

Project Location

Street, road, or other descriptive location

Legal Description:

Quarter	Section	Township	Range
In or near (city or town)	County	Tax Map #	Tax Lot #
Waterway	River Mile	Latitude	Longitude

Adjacent Property Information:

Street, road, or other descriptive location

Legal Description:

Quarter	Section	Township	Range
In or near (city or town)	County	Tax Map #	Tax Lot #
Waterway	River Mile	Latitude	Longitude

An on-site, Water Quality Sensitive Area reconnaissance was completed on:

Date	By	Title	Company

A. Existence of Water Quality Sensitive Areas

As defined in CWS's Design and Construction Standards, Water Quality Sensitive Areas:
☐ do ☐ do not exist on site (check appropriate box).

☐ do ☐ do not exist within 200 feet on adjacent properties, or ☐ unable to evaluate adjacent property (check appropriate box).

- If Water Quality Sensitive Areas exist, complete Section B below.
- If Water Quality Sensitive Areas do not exist, skip Section B, sign this form and submit to CWS with plan approval package.

B. Types of Water Quality Sensitive Areas

The type(s) of Water Quality Sensitive Area(s) that occur on site or within 200 feet on adjacent properties are (check all that apply):

☐ wetland(s) ☐ spring(s) ☐ intermittent stream(s) ☐ perennial stream(s) ☐ ponds

Sign this form and submit to CWS with plan approval package and one (1) copy of:

- Natural Resources Assessment Report that includes:
  - Wetland Delineation Report per DSL / Corps reporting requirements (if wetlands present).
  - Vegetated Corridor documentation, including a base map and photographs showing the surveyed location of all Sensitive Areas, Vegetated Corridors, and Vegetated Corridor condition.

I certify that I am familiar with the information contained in this document, and to the best of my knowledge and belief, this information is true, complete, and accurate.

Property Owner:

Print/Type Name	Print/Type Title
Signature	Date

APPENDIX D:
LANDSCAPE REQUIREMENTS

1.0 INTRODUCTION

1.1 Jurisdiction

Clean Water Services (District) recognizes the importance of the water quality Sensitive Areas, Vegetated Corridors, and Storm Water Infrastructure that, along with the Tualatin River, fall under its jurisdiction. To improve water quality and preserve aquatic species, and meet the intent of both the federal Clean Water and the Endangered Species Acts, the District developed the following requirements for landscape management.

Most Sensitive Areas are also regulated by the Division of State Lands (DSL) and the U.S. Army Corps of Engineers (Corps). In the event of permitted mitigation, planting plans for these areas shall follow DSL and Corps guidelines and approved plans. Vegetated Corridors and Storm Water Facilities are regulated by the District and the plans and management strategies for these areas shall follow the steps outlined in this document. Alternative plans and management strategies may be approved by the District.

1.2 Professional Assistance

Revegetation in Sensitive Areas, Vegetated Corridors and Storm Water Infrastructure should facilitate succession toward low maintenance native plant communities. Consultation with a professional landscape architect, ecologist, or horticulturist knowledgeable in native plants is highly recommended when preparing plans. Satisfying the landscaping requirements may require the services of a registered landscape architect. See ORS671.310 through 671.459.

Non-native, invasive plant management and wildlife damage management strategies are provided in Clean Water Services *Integrated Vegetation and Animal Management (IVAM) Guidance*. Especially challenging management situations may require assistance from a landscape maintenance contractor or a wildlife biologist.

2.0 REVEGETATION METHODS

Successful revegetation is critical to the proper function of Sensitive Areas, Vegetated Corridors and Storm Water Infrastructure for the benefit of water quality and quantity management, and aquatic species preservation. This Appendix aids professionals, the development community, and field crews in planning, designing and implementing successful revegetation projects in these areas. This document guides design decisions to promote successful planting efforts, while allowing flexibility to address opportunities and constraints at each

site. When developing revegetation plans, four major components shall be addressed: hydrology, soils, plant materials, and maintenance.

Document the following steps in preparing the landscape plan:

Step 1: Assess Hydrologic and Hydraulic Conditions

a) Determine the frequency and duration of water inundation (including appropriate elevations) of the revegetation area. Watershed hydrology and hydraulic models for major streams are available from the District. In some cases, current site conditions (i.e. wetland presence) will suffice. For Storm Water Infrastructure, the models used to design and size the facility shall be used to determine frequency, duration and surface water elevations within the facility.

b) Assign appropriate hydrologic zones to the revegetation area and apply them to the plan. Most project sites include one or more of the following planting zones with respect to hydrology during the growing season:
   - Wet (standing or flowing water/nearly constant saturation; anaerobic soils)
   - Moist (periodically saturated; anaerobic and/or aerobic soils)
   - Dry (infrequent inundation/saturation, if any; aerobic soils)

c) Identify and map wet, moist and dry planting zones.

Step 2: Assess Soil Conditions and Assign Appropriate Preparation Specifications to Plans

a) Determine the organic content and non-native, invasive seed bank likely in the soil. For most Storm Water Facilities, the soil is often high in clay, gravel, or minerals devoid of topsoil and organic material, and/or high in non-native, invasive weed content. The conditions in Sensitive Areas and Vegetated Corridors vary greatly.

b) For upland sites with at least one foot of native topsoil, but containing a non-native, invasive seed bank or plants, remove the undesirable plants, roots, and seeds (*see IVAM Guidance*) prior to planting.

c) For upland sites with less than one foot of topsoil and invasive, non-native seed bank or plants that have become established, remove the undesirable plants, roots, and seeds (*see IVAM Guidance*) prior to adding topsoil. The sub-grade in these areas shall be tilled to a depth of at least four inches and at least 12 inches of clean compost-amended topsoil shall be added. In the event of floodplain grading, over-excavation of the sub-grade shall occur to ensure that the 12 inches of topsoil can be applied without impacting surface water elevations. The compost-amended topsoil shall have the

following characteristics to ensure a good growing medium for the selected plants:

- Texture – material passes through one-inch screen
- Fertility – 35% organic matter

d) For wet areas in Sensitive Areas and Storm Water Infrastructure, the soil conditions shall be hydric or the grading designed to hold sufficient water to promote hydric soil formation. For some bulb and tubers, the addition of organic muck soil will improve plant establishment.

e) Where necessary for erosion control or organic matter enhancement, additional leaf compost may be placed uniformly on topsoil. (Refer to *Erosion Prevention and Sediment Control Planning and Design Manual, December 2000.)* Other amendments, conditioners, and bio-amendments may be added as needed to support the specified plants or adjust the soil pH. Traditional fertilization techniques (applying N-P-K) are not necessary when using native plants.

Step 3: Identify Plants to be Preserved, Select Revegetation Plant Materials, Quantities, Placement and Assign Planting Zones and Specifications to Plans

a) Preservation: Every effort shall be made to protect a site's existing native vegetation. Native vegetation along Sensitive Areas and Vegetated Corridors shall be retained to the maximum extent practicable.

b) Selection: Plant selection shall be from a native species palette and shall consider site soil types, hydrologic conditions, and shade requirements. A detailed list of common native plant community types appropriate for planting Sensitive Areas, Vegetated Corridors and Storm Water Infrastructure is provided in Table 1. Upon approval from the District, limited use of non-invasive non-native plants may be permitted in highly urbanized settings such as regional town centers. Planting restrictions are limited to the following:

(1) Deep rooting trees and shrubs (e.g. willow) shall not be planted on top of concrete pipes, or within 10 feet of retaining walls, inlet/outlet structures or other culverts; and

(2) Large trees or shrubs shall not be planted on berms over four feet tall that impound water. Small trees or shrubs with fibrous root systems may be installed on berms that impound water and that are less than four feet tall.

c) Quantities: Trees shall be planted at 10 feet on-center; shrubs shall be planted at four feet on-center. See Table 1 for on-center requirements for herbaceous species. The following equations shall be used to calculate planting densities on a per acre basis.

- Total number of trees per acre = area in square feet x 0.01
- Total number of shrubs per acre = area in square feet x 0.05
- Groundcover = plant and seed to achieve 100% areal coverage

d) Placement: Plant placement shall be consistent with the form of the naturally occurring plant community. Trees and shrubs shall be placed in singles or clusters of the same species to provide a natural planting scheme. The grouping size and plant quantity is dependant on the species being planted, their respective sizes, and on the size of the revegetation area. Overseeding of the revegetation area shall occur with native seed mixes appropriate to the plant community and hydrologic zone in which it is being applied (see Table 1: Plant Communities for Revegetation). The plant placement and seeding shall promote maximum vegetative cover to reduce the area available for weed establishment.

Step 4: Determine Plant Installation Requirements and Assign Specifications to Plans

a) Timing: Plantings shall be installed between February 1 and May 1 or between October 1 and November 15. When plantings must be installed outside these times, additional measures may be needed to ensure survival and shall be specified on the plans.

b) Erosion Control: Grading, soil preparation, and seeding shall be performed during optimal weather conditions and at low flow levels to minimize sediment impacts. Site disturbance shall be minimized and desirable vegetation retained, where possible. Slopes shall be graded to support the establishment of vegetation. Where seeding is used for erosion control, either Regreen (or its equivalent) or sterile wheat shall be used to stabilize slopes until permanent vegetation is established. Biodegradable fabrics (coir, coconut or approved jute matting (min. 1/4" square holes)) may be used to stabilize slopes and channels. Fabrics such as burlap may also be used to hold plant plugs in place and to discourage floating upon inundation. No plastic mesh that can entangle wildlife shall be permitted. Consult Clean Water Services' *Erosion Prevention and Sediment Control Planning and Design Manual (December 2000)* for additional information.

c) Mulching: Trees, shrubs, and groundcovers planted in upland areas shall be mulched a minimum of three inches in depth and 18 inches in diameter, to retain moisture and discourage weed growth around newly installed plant material. Appropriate mulches include those made from composted bark or leaves that have not been chemically treated. The use of mulch in frequently inundated areas shall be limited, to avoid any possible water quality impacts including the leaching of tannins and nutrients, and the migration of mulch into waterways.

d) Plant Protection from Wildlife: Depending on site conditions, appropriate measures shall be taken to limit wildlife-related damage (*see IVAM Guidance*).

e) Irrigation: Unless site hydrology is currently adequate, a District/City approved irrigation system or other water practice (i.e., polymer, plus watering) shall be installed and used during the three-year plant establishment period. Watering shall be provided at a rate of at least one inch per week between June 15 and October 15.

f) Access: Maintenance access for plant maintenance shall be provided for Sensitive Areas and Vegetated Corridors via a five-foot easement or shared boundary with Storm Water Infrastructure. Storm Water Infrastructure access requirements are provided in Appendix B: *Water Quality and Quantity Facility Design.*

Step 5: Determine Plant Monitoring and Maintenance Requirements

a) Monitoring: Site visits in the spring and fall will likely be necessary to assess the status of the plantings, irrigation, mulching, etc. and to avoid failure of revegetation effort.

b) Weed Control: The removal of non-native, invasive weeds shall be necessary throughout the maintenance period, or until a healthy stand of desirable vegetation is established (*see IVAM Guidance*).

c) Plant Replacement and Preservation: Installed plants that fail to meet the acceptance criteria (see Chapter 2) shall be replaced during the maintenance period. Prior to replacement, the cause of loss (wildlife damage, poor plant stock, etc.) shall be documented, corrected and the plants replaced.

Step 6: Prepare Construction Documents and Specifications

The construction documents and specifications shall include:

a) Sensitive Area boundaries and Vegetated Corridor boundaries
b) Site Preparation plan and specifications, including limits of clearing, existing plants and trees to be preserved, and methods for removal and control of invasive, non-native species, and location and depth of topsoil and or compost to be added to revegetation area
c) Planting plan and specifications:
    i. planting table that documents the common name, scientific name, distribution (zone and spacing), condition and size of plantings,
    ii. installation methods for plant materials,

iii. mulching,
iv. plant tagging for identification,
v. plant protection, and
vi. seeding methods, rates, and areas

d) Irrigation plan and specifications, including identification of water source, watering timing and frequency, and maintenance of the system

e) Maintenance schedule; including responsible party and contact information, dates of inspection (minimum three per growing season and one prior to onset of growing season) and estimated maintenance schedule (as necessary) over the three year monitoring period

f) Access points for installation and maintenance including vehicle access if available

g) Standard drawing details (north arrow, scale bar, property boundaries, project name, drawing date, name of designer and property owner).

Table 1: Plant Communities for Revegetation

Plant Commiunities	Minimum Species Composition	Plant Category	Water Requirements	Light Requirements	Minimum Rooting Size	Minimum Plant Height	On Center / Seeding Rate[1]	Spacing Format[2]
Riparian Forest (RF)								
Red alder (Alnus rubra)	⊙	Tree	Moist	Sun	1 gal	3'	10'	Single
Western red cedar (Thuja plicata)	⊙	Tree	Moist	Shade	2 gal	2'	10'	Single
Western hemlock (Tsuga heterophylla)	⊙	Tree	Moist	Part	2 gal	2'	10'	Single
Red elderberry (Sambucus racemosa)	⊙	Shrub	Moist	Part	1 gal	1.5'	4-5'	Single
Black twinberry (Lonicera involcrata)		Shrub	Moist	Part	1 gal	1.5'	4-5'	Single
Highbush cranberry (Viburnum edule)		Shrub	Moist	Part	1 gal	1.5'	4-5'	Single
Red-osier dogwood (Cornus stoniferia)	⊙	Shrub	Wet	Part	1 gal	2'	4-5'	Cluster
Indian plum (Oemleris cerasiformis)	⊙	Shrub	Moist	Shade	2 gal	2'	4-5'	Cluster
Swamp rose (Rosa pisocarpa)		Shrub	Moist	Part	1 gal	1.5'	4-5'	Cluster
Pacific ninebark (Pysocarpus capitatus)		Shrub	Moist	Shade	1 gal	2'	4-5'	Single
Snowberry (Symphoricarpos albus)	⊙	Shrub	Dry	Part	1 gal	1.5'	4-5'	Cluster
Salmonberry (Rubus spectabilis)	⊙	Shrub	Moist	Shade	1 gal	1.5'	4-5'	Cluster
Stinky currant (Ribes viscosissimum)		Shrub	Moist	Part	1 gal	1.5'	4-5'	Single
Maidenhair fern (Adiatum pedatum)		Herb	Moist	Shade	4"	na	Variable	Cluster
Lady fern (Athyrium filix-femina)		Herb	Moist	Shade	1 gal	na	Variable	Cluster
Skunk cabbage (Lysichiton americaum)		Herb	Wet	Shade	bulbs	na	Variable	Cluster
False lily-of-the-valley (Maianthemum dilatatum)		Herb	Moist	Shade	bulbs, 4"	na	Variable	Cluster
Candy Flower (Claytonia sibirica)		Herb	Moist	Shade	4"	na	Variable	Cluster
Miners Lettuce (Monita perfoliata)		Herb	Moist	Shade	4"	na	Variable	Cluster
Stream violet (Viola glabella)		Herb	Moist	Shade	4"	na	Variable	Cluster
Youth-on-age (Tolmiea menziesii)		Herb	Moist	Shade	4"	na	Variable	Cluster
Insideout flower (Vancouveria hexandra)		Herb	Moist	Shade	4"	na	Variable	Cluster
Dewey's sedge (Carex deweyana)		Herb	Dry	Shade	plugs, 4"	4"	Variable	Mass
Hair bentgrass (Agrostis scabra)		Grass	Moist	Part	seed	na	2 lbs pls	Mass
Oregon bentgrass (Agrostis oregonensis)	⊙	Grass	Dry	Part	seed	na	2 lbs pls	Mass
Tall manna-grass (Glyceria elata)	⊙	Grass	Moist	Part	seed	na	8 lbs pls	Mass

Table 1: Plant Communities for Revegetation

Plant Commiunities	Minimum Species Composition	Plant Category	Water Requirements	Light Requirements	Minimum Rooting Size	Minimum Plant Height	On Center / Seeding Rate[1]	Spacing Format[2]
Upland Forest (UF)								
Red alder (Alnus rubra)	⊙	Tree	Moist	Sun	1 gal	3'	10'	Single
Big leaf maple (Acer macrophyllum)	⊙	Tree	Dry	Sun	2gal	3'	10'	Single
Douglas Fir (Pseudotsuga menziesii)	⊙	Tree	Dry	Sun	2gal	3'	10'	Single
Grand fir (Abies grandis)	⊙	Tree	Dry	Sun	2 gal	2'	10'	Single
Pacific yew (Taxus brevifolia)		Tree	Moist	Shade	2 gal	2'	10'	Single
Cascara (Rhamnus purshiana)		Tree	Dry	Part	2 gal	2'	10'	Single
Pacific dogwood (Cornus nattallii)		Tree	Moist	Shade	1 gal	2'	10'	Single
Bitter cherry (Prunus emarginata)		Tree	Moist	Part	2 gal	2'	10'	Single
Vine Maple (Acer circinatum)	⊙	Tree	Moist	Part	2 gal	2'	4-5'	Single
Oceanspray (Holodiscus discolor)	⊙	Shrub	Dry	Sun	1 gal	1.5'	4-5'	Single
Red elderberry (Sambucus racemosa)	⊙	Shrub	Moist	Part	1 gal	1.5'	4-5'	Single
Red flowering currant (Ribes sanguineum)	⊙	Shrub	Dry	Sun	1 gal	1.5'	4-5'	Cluster
Cascade Oregon Grape (Mahonia nervosa)		Shrub	Moist	Part	1 gal	4"	4-5'	Cluster
Tall Oregon Grape (Mahonia aquifolium)		Shrub	Dry	Sun	1 gal	6"	4-5'	Single
Red huckleberry (Vaccinium parvifolium)		Shrub	Moist	Shade	1 gal	1.5'	4-5'	Cluster
Thimbleberry (Rubus pariflorus)		Shrub	Moist	Shade	1 gal	1.5'	4-5'	Cluster
Snowberry (symphoricarpos albus)	⊙	Shrub	Dry	Part	1 gal	1.5'	4-5'	Cluster
Woods Rose (Rosa woodsii)	⊙	Shrub	Dry	Part	1 gal	1.5'	4-5'	Cluster
Serviceberry (Almelanchier alnifolia)		Shrub	Dry	Part	2 gal	2'	4-5'	Single
Sword fern (Polystichum munitum)		Shrub	Moist	Shade	2 gal	na	4-5'	Cluster
Deer fern (Blechnum spicant)		Herb	Moist	Shade	1 gal	na	Variable	Cluster
Orange honeysuckle (Lonicera ciliosa)		Herb	Moist	Shade	2 gal	na	Variable	Single
Salal (Gaultheria shallon)		Herb	Moist	Part	1 gal	4"	Variable	Cluster
Wood strawberry (Fragaria vesca)		Herb	Moist	Shade	4"	na	Variable	Cluster
Western trillium (Trillium ovatum)		Herb	Moist	Shade	4"	na	Variable	Cluster
Saxifrage (Mitella spp)		Herb	Moist	Shade	1 gal	na	Variable	Cluster
Red columbine (Aquilegia formosa)		Herb	Dry	Part	4"	na	Variable	Cluster
Solomon's seal (Solomon smilacina)		Herb	Moist	Shade	4"	na	Variable	Cluster
Native California brome (Bromus carinatus)	⊙	Grass	Dry	Sun	seed	na	10 lbs pls	Mass
Blue Wildrye (Elymus glaucus)	⊙	Grass	Dry	Part	seed	na	10 lbs pls	Mass

Table 1: Plant Communities for Revegetation

Plant Commiunities	Minimum Species Composition	Plant Category	Water Requirements	Light Requirements	Minimum Rooting Size	Minimum Plant Height	On Center / Seeding Rate[1]	Spacing Format[2]
Oak Woodland / Savanna (OW)								
Oregon white oak (Quercus garryana)	⊙	Tree	Dry	Sun	2 gal	2'	10'	Single
Pacific madrone (Arbutus menziesii)	⊙	Tree	Dry	Sun	2 gal	2'	10'	Single
Snowberry (Symphoricarpos albus)	⊙	Shrub	Dry	Part	1 gal	1.5'	4-5'	Cluster
Serviceberry (Almelanchier alnifolia)	⊙	Shrub	Dry	Part	1 gal	2'	4-5'	Single
Oceanspray (Holodiscus discolor)	⊙	Shrub	Dry	Sun	1 gal	1.5'	4-5'	Cluster
Nootka rose (Rosa nutkana)		Shrub	Moist	Sun	1 gal	1.5'	4-5'	Cluster
Cascade Oregon grape (Mahonia nervosa)		Herb	Moist	Part	1 gal	4"	Variable	Cluster
Blue wild-rye (Elymus glacus)	⊙	Grass	Dry	Part	seed	na	10 lbs pls	Mass
Native California brome (Bromus carinatus)	⊙	Grass	Dry	Sun	seed	na	10 lbs pls	Mass
Ash Forested Wetland (FW)								
Oregon Ash (Fraxinus latifolia)	⊙	Tree	Moist	Part	2 gal	3'	10'	Single
Pacific Ninebark (Physocarpus capitatus)	⊙	Shrub	Moist	Shade	2 gal	2'	4-5'	Single
Red-osier dogwood (Cornus stolonifera)	⊙	Shrub	Wet	Part	1 gal	2'	4-5'	Cluster
Snowberry (Symphoricarpus albus)	⊙	Shrub	Dry	Part	1gal	1.5'	4-5'	Cluster
Slough sedge (Carex obnupta)	⊙	Herb	Moist	Part	plugs	6"	Variable	Mass
Corn lily (Ceratrum californicum)		Herb	Wet	Shade	bulbs	na	Variable	Cluster
Candy flower (Claytonia sibirica)		Herb	Moist	Shade	4"	na	Variable	Cluster
Miners lettuce (Montia perfoliata)		Herb	Moist	Shade	4"	na	Variable	Cluster
Dewey's sedge (Carex deweyana)		Herb	Dry	Shade	plugs	4"	Variable	Mass
Small fruited bulrush (Scirpus microcarpus)		Herb	Wet	Sun	plugs	4"	Variable	Mass
Tall mannagrass (Glyceria elata)	⊙	Grass	Moist	Shade	seed	na	10 lbs pls	Mass

Table 1: Plant Communities for Revegetation

Plant Commiunities	Minimum Species Composition	Plant Category	Water Requirements	Light Requirements	Minimum Rooting Size	Minimum Plant Height	On Center / Seeding Rate[1]	Spacing Format[2]
Shrub / Scrub Wetland (SS)								
Pacific willow (Salix lasiandra)	⊙	Tree	Wet	Sun	1 gal	3'	10'	Single
Sitka willow ((Salix sitchensis)		Tree	Moist	Sun	1 gal	3'	10'	Cluster
Douglas hawthorne (Crataegus douglasii)		Tree	Moist	Part	2 gal	2'	10'	Cluster
Pacific Crabapple (Malus fusca)	⊙	Tree	Moist	Part	2 gal	2'	10'	Cluster
Scouler willow (Salix scouleriana)	⊙	Shrub	Moist	Sun	1 gal	3'	4-5'	Cluster
Red-osier dogwood (Cornus stoloniferia)	⊙	Shrub	Wet	Part	1 gal	2'	4-5'	Cluster
Clustered rose (Rosa pisocarpa)		Shrub	Wet	Part	1 gal	1.5'	4-5'	Cluster
Douglas spirea (Spirea douglasii)	⊙	Shrub	Wet	Sun	1 gal	1.5'	4-5'	Cluster
Nodding beggartick (Bidens cernua)		Herb	Wet	Sun	1 gal	1.5'	Variable	Cluster
Spreading rush (Juncus patens)		Herb	Moist	Part	plugs	6"	Variable	Mass
Western manna-grass (Glyceria occidentalis)	⊙	Grass	Wet	Sun	seed	na	8 lbs pls	Mass
Emergent Marsh (EM)								
Nodding beggartick (Bidens cernua)	⊙	Herb	Moist	Sun	1 gal	1.5'	Variable	Cluster
Hardstem bulrush (Scirpus accutus)		Herb	Wet	Sun	plugs	1.5'	Variable	Cluster
Small-fruited bulrush (Scirpus microcarpus)	⊙	Herb	Wet	Sun	plugs	6"	Variable	Mass
Creeping spike rush (Eleocharis palustris)	⊙	Herb	Wet	Sun	seed, plugs	4"	Variable	Mass
Wapato (Sagittaria latifolia)		Herb	Wet	Sun	bulbs	na	Variable	Cluster
American water plantain (Alisma plantago-aquatica)		Herb	Wet	Sun	bulbs	na	Variable	Cluster
Soft stemmed bulrush (Scirpus taberaemontani)		Herb	Wet	Sun	plugs	1.5'	Variable	Cluster
American brooklime (Veronica americana)		Herb	Wet	Sun	plugs	na	Variable	Cluster
Marsh speedwell (Veronica scutellata)		Herb	Wet	Sun	plugs	na	Variable	Cluster
American sloughgrass (Beckmannia syzigachne)	⊙	Grass	Wet	Sun	seed, plugs	na	16 lbs pls	Mass
Western manna-grass (Glyceria occidentalis)	⊙	Grass	Wet	Sun	seed	na	8 lbs pls	Mass

Table 1: Plant Communities for Revegetation

Plant Commiunities	Minimum Species Composition	Plant Category	Water Requirements	Light Requirements	Minimum Rooting Size	Minimum Plant Height	On Center / Seeding Rate[1]	Spacing Format[2]
Storm Water Facility (SWF)								
Oregon Ash (Fraxinus latifolia)		Tree	Moist	Part	2 gal	3'	10'	Single
Red alder (Alnus rubra)	⊙	Tree	Moist	Sun	1 gal	3'	10'	Single
Douglas Fir (Pseudotsuga menziesii)	⊙	Tree	Dry	Sun	2gal	3'	10'	Single
Vine Maple (Acer circinatum)	⊙	Tree	Moist	Part	2 gal	2'	4-5'	Single
Pacific willow (Salix lasiandra)		Tree	Wet	Sun	1 gal	3'	10'	Single
Sitka willow ((Salix sitchensis)		Tree	Moist	Sun	1 gal	3'	10'	Cluster
Pacific dogwood (Cornus nattallii)		Tree	Moist	Shade	1 gal	2'	10'	Single
Bitter cherry (Prunus emarginata)		Tree	Moist	Part	2 gal	2'	10'	Single
Scouler willow (Salix scouleriana)		Shrub	Moist	Sun	1 gal	3'	4-5'	Cluster
Red-osier dogwood (Cornus stoloniferia)	⊙	Shrub	Wet	Part	1 gal	2'	4-5'	Cluster
Pacific ninebark (Pysocarpus capitatus)		Shrub	Moist	Shade	1 gal	2'	4-5'	Single
Oceanspray (Holodiscus discolor)	⊙	Shrub	Dry	Sun	1 gal	1.5'	4-5'	Single
Serviceberry (Almelanchier alnifolia)	⊙	Shrub	Dry	Part	1 gal	2'	4-5'	Single
Nootka rose (Rosa nutkana)		Shrub	Moist	Sun	1 gal	1.5'	4-5'	Cluster
Snowberry (Symphoricarpus albus)	⊙	Shrub	Dry	Part	1gal	1.5'	4-5'	Cluster
Native rose (Rosa pisocarpa or gymnocarpa)		Shrub	Wet	Part	1 gal	1.5'	4-5'	Cluster
Douglas spirea (Spirea douglasii)	⊙	Shrub	Wet	Sun	1 gal	1.5'	4-5'	Cluster
Red flowering currant (Ribes sanguineum)	⊙	Shrub	Dry	Sun	1 gal	1.5'	4-5'	Cluster
Nodding beggartick (Bidens cernua)		Herb	Wet	Sun	1 gal	1.5'	Variable	Cluster
Spreading rush (Juncus patens)		Herb	Moist	Part	plugs	6"	Variable	Mass
Small-fruited bulrush (Scirpus microcarpus)		Herb	Wet	Sun	plugs	6"	Variable	Mass
Creeping spike rush (Eleocharis palustris)		Herb	Wet	Sun	seed, plugs	4"	Variable	Mass
Slough sedge (Carex obnupta)	⊙	Herb	Moist	Part	plugs	6"	Variable	Mass
Toad rush (Juncus bufonius)*		Herb	Dry	Sun	seed, plugs	4"	Variable	Mass
Rossi Sedge (Carex rossi)*		Herb	Moist	Sun	plugs	4"	Variable	Mass
NW Native Wildflower mix		Herb	Mix	Sun	seed	na	10 lbs pls	Mass
Oregon Bentgrass (Agrostis oregonesis)*	⊙	Grass	Dry	Sun	seed	na	8 lbs pls	Mass
Idaho bentgrass (Agrostis idahoensis)*		Grass	Dry	Sun	seed	na	8 lbs pls	Mass
Western manna-grass (Glyceria occidentalis)		Grass	Wet	Sun	seed	na	8 lbs pls	Mass

[1] Seeding rate: pure live seed (pls) pounds per acre
Tree spacing = sq footage x 0.01; Shrub spacing = sq footage x 0.05; Groundcover = 100% areal cover.
Square footage is based on the total site or facility size.

[2] Single= distribute throughout planting area. Cluster = group 3 to 7 plants in same area with herb or grass in between.
Mass = plant densely to form a single stand of that species in a given area.

* grows 5-30 cm tall

APPENDIX E
STANDARD DETAILS

TABLE OF CONTENTS

Thumbnail No.		
SD-1	010	Standard Manhole
SD-2	020	Precast Concrete Manhole Base
SD-3	030	Precast Rubber Gasket Manhole
SD-4	040	Shallow Flat Top Manhole
SD-5	050	Flat Top Manhole
SD-6	070	Inside Drop Manhole
SD-7	080	Inside Drop for Large-Diameter Pipe
SD-8	100	Manhole Step
SD-9	110	Suburban and Standard Manhole Frame and Cover
SD-10	120	Watertight Manhole Frame and Cover
SD-11	130	Concrete Manhole Closure Collar
SD-12	140	Manhole Chimney Seal
SD-13	150	Standard Cleanout
SD-14	160	Cleanout Frame and Cover
SD-15	170	Side Service
SD-16	175	6" Public Side Service
SD-17	180	PVC Gasketed Saddle
SD-18	190	Inserta-Tee
SD-19	195	Curb Inlet Manhole (CG-48MH)
SD-20	200	Curb Inlet Manhole (Top) (CG-48MH)
SD-21	205	Curb Inlet Manhole (CG-48MH Modified)
SD-22	220	Area Drain Type II
SD-23	225	Gutter & Curb Inlet Catch Basin (CG-2)
SD-24	226	Gutter & Curb Inlet Catch Basin Reinforcement (CG-2)
SD-25	230	Curb Inlet Catch Basin (CG-30)
SD-26	240	Curb Inlet Catch Basin (CG-48)
SD-27	250	Ditch Inlet
SD-28	255	Catch Basin Frame & Grate (LG-2)
SD-29	260	Ditch Inlet Frame and Grate
SD-30	270	Creek Crossing Restoration
SD-31	280	Trench Backfill Details
SD-32	285	T-Cut Asphalt Details
SD-33	370	Bore Detail
SD-34	371	Concrete Cap
SD-35	372	Concrete Encasement/Closure Collar

APPENDIX E
STANDARD DETAILS (cont'd)

TABLE OF CONTENTS

	Thumbnail No.	
SD-36	373	Anchor Wall
SD-37	515	Water Quality Manhole
SD-38	520	Water Quality Swale
SD-39	530	Water Quality Swale Construction & Maintenance Notes
SD-40	544	Alternative Outflow Control Structure (CG-48MH Modified)
SD-41	545	Water Quality Outflowt Control Structure
SD-42	546	Orifice Plate & Guide
SD-43	600	Float Switch Plan and Detail C
SD-44	610	Float Switch Section A
SD-45	620	Float Switch Detail B
SD-46	630	Sample Design Data Table
SD-47	640	Force Main Pressure Gauge
SD-48	650	Large Precast Manhole
SD-49	655	Large Precast Manhole-Bases
SD-50	660	Large Precast Manhole- Types
SD-51	665	Large Precast Manhole Base Slabs
SD-52	670	Large Precast Manhole Base Slabs
SD-53	675	Large Precast Manhole Base Section Reinforcement
SD-54	680	Large Precast Manhole Top Slabs
SD-55	685	T-Top Manhole w 48" Riser
SD-56	695	Sanitary Permanent Flow Monitor Detail
SD-57	696	Conduit Trench Backfill
SD-58	700	Air Test Form
SD-59	705	Nomograph
SD-60	710	Manhole Vacuum Test
SD-61	715	Manhole Hydrostatic Test
SD-62	720	Average Velocities for Estimating Travel Time for Overland Flows
SD-63	725	Headwater Depth for Corrugated Pipe w/Inlet Control
SD-64	730	Headwater Depth for Smooth Interior Pipe Culverts with Inlet Control
SD-65	735	Head for Culverts (Pipe w/"n"=0.012), Flowing Full with Outlet Control
SD-66	740	Head for Culverts (Pipe w/"n"=0.024), Flowing Full with Outlet Control
SD-67	760	Geotextile Stabilization
SD-68	1003	Conceptual Site Schematic
SD-69	1005	Chain Link Fence & Gate
SD-70	1009	Yard Hydrant
SD-71	1011	Reduced Pressure Backflow Preventer
SD-72	1071	Electrical One-Line Diagram
SD-73	1072	Electrical Interior Enclosure- 01
SD-74	1073	Electrical Interior Enclosure- 02

STANDARD DETAILS (cont'd)

TABLE OF CONTENTS

Thumbnail No.		
SD-75	1074	Electrical Control Panel Detail
SD-76	1075	Electrical Sequence Control Diagram
SD-77	1076	Electrical Pump Control Diagrams
SD-78	1077	Electrical Enclosure Rainshield Detail Reference
SD-79	1078	Electrical Intrinsically Safe Example Drawing
SD-80	1079	Electrical Wetwell Level Detail
SD-81	1080	Electrical Disconnect Air-Gap Junction Box Details
SD-82	1081	Electrical Light Pole Detail

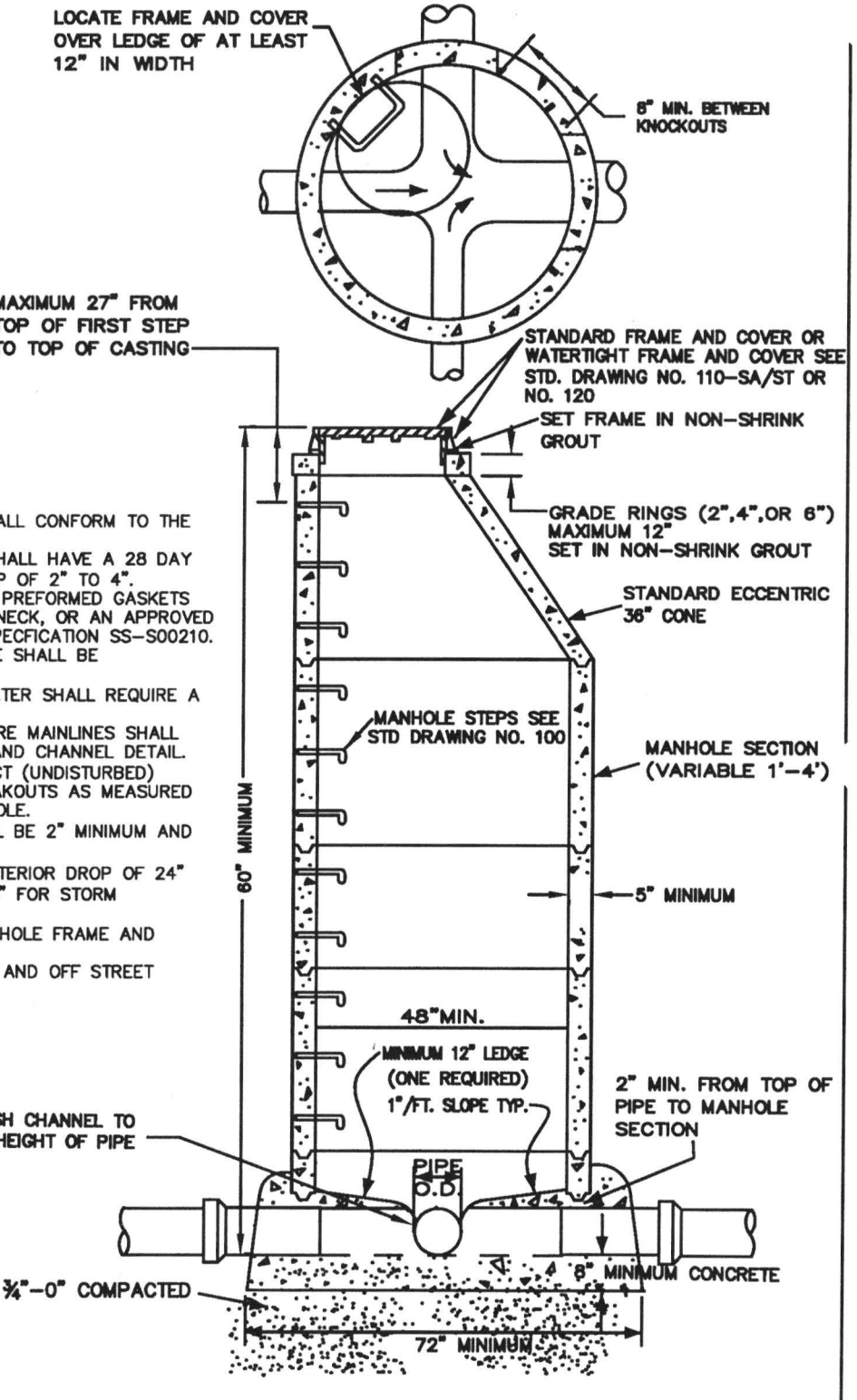

NOTES:

1. ALL PECAST MANHOLE SECTIONS SHALL CONFORM TO THE REQUIREMENTS OF ASTM C 478.
2. ALL POURED IN PLACE CONCRETE SHALL HAVE A 28 DAY STRENGTH OF 3000 PSI, AND SLUMP OF 2" TO 4".
3. ALL JOINTS SHALL BE SEALED WITH PREFORMED GASKETS SUCH AS KENT-SEAL NO. 2, RAM-NECK, OR AN APPROVED EQUAL CONFORMING TO FEDERAL SPECFICATION SS-S00210.
4. ALL PIPE CONNECTIONS TO MANHOLE SHALL BE WATERTIGHT.
5. PIPE CONNECTIONS OF 24" OR GREATER SHALL REQUIRE A MANHOLE AND CHANNEL DETAIL.
6. PIPE CONNECTIONS OF FOUR OR MORE MAINLINES SHALL REQUIRE A MANHOLE CONNECTION AND CHANNEL DETAIL.
7. PROVIDE A MINIMUM OF 8" OF INTACT (UNDISTURBED) MANHOLE WALL BETWEEN PIPE BREAKOUTS AS MEASURED ON THE INSIDE FACE OF THE MANHOLE.
8. BREAKOUT OF WALL FOR PIPE SHALL BE 2" MINIMUM AND 4" MAXIMUM CLEAR OF PIPE WALL.
9. THIS DETAIL LIMITED TO MAXIMUM INTERIOR DROP OF 24" FOR SANITARY CONNECTION AND 48" FOR STORM CONNECTION.
10. WATERTIGHT / TAMPER PROOF MANHOLE FRAME AND COVER SHALL BE USED IN ALL EASEMENT AND OFF STREET AREAS.

STANDARD MANHOLE

DRAWING NO. 010

REVISED 02-03

Clean Water Services
Our commitment is clear.

NOTES:
ALL PRECAST MANHOLE SECTIONS SHALL CONFORM TO THE REQUIREMENTS OF ASTM C-478 AND APPLICABLE PROVISIONS OF STANDARD DRAWING NO. 010.

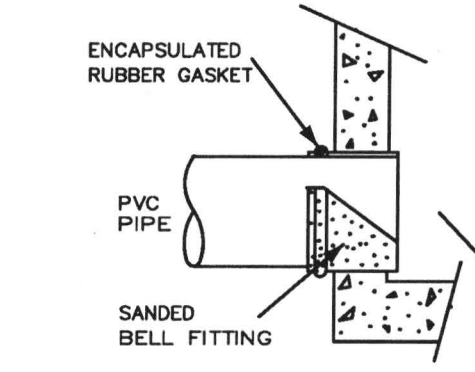

PVC SANDED BELL

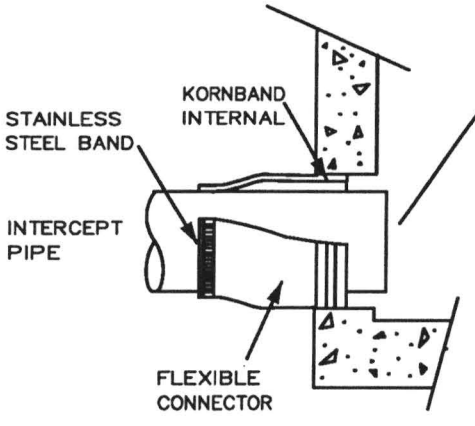

KORNSEAL BOOT

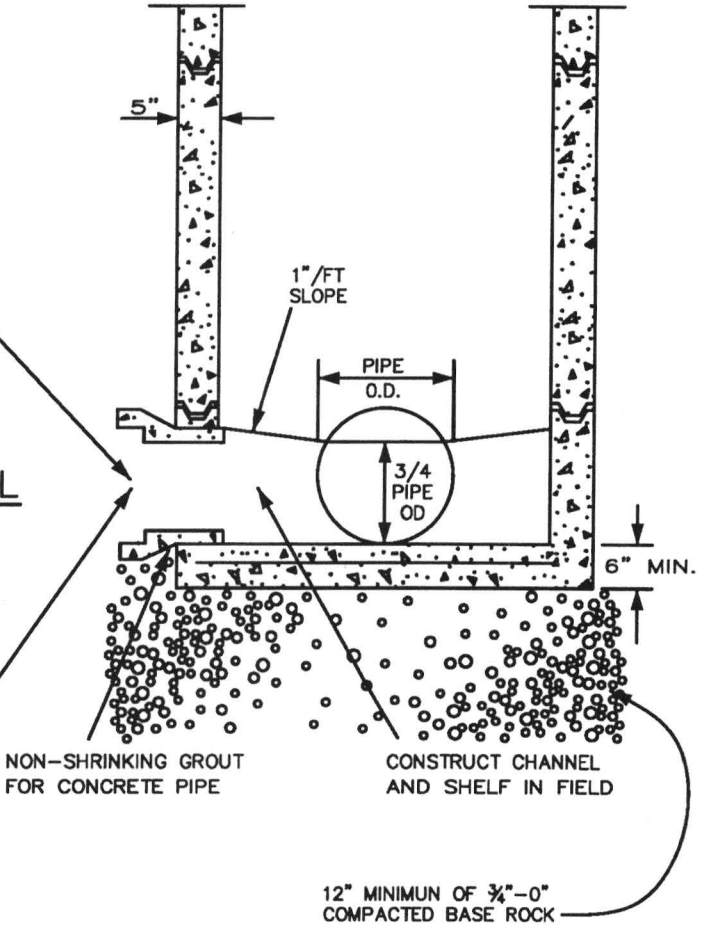

PRECAST CONCRETE MANHOLE BASE

DRAWING NO. 020

REVISED 02-03

Clean Water Services
Our commitment is clear.

NOTES:

1. ALL MANHOLE SECTIONS SHALL CONFORM TO THE REQUIREMENTS OF ASTM C-478 AND APPLICABLE PROVISIONS OF STANDARD MANHOLE, DRAWING NO. 010.
2. ALL JOINTS AND RUBBER GASKETS SHALL COMFORM TO THE REQUIREMENTS OF ASTM C-443.

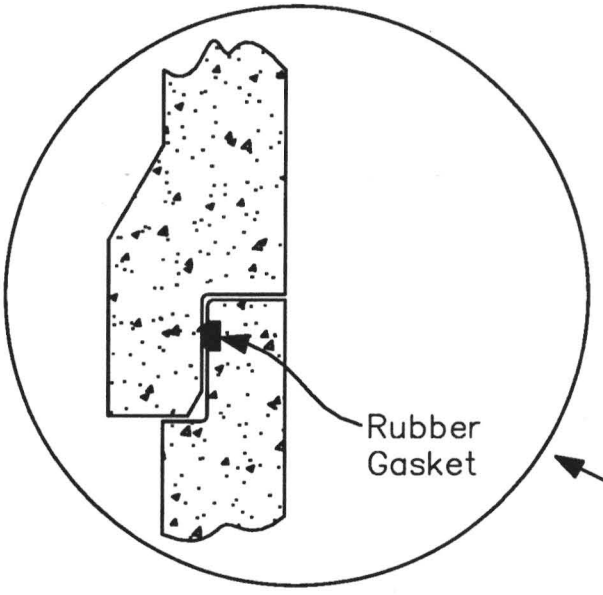

JOINT DETAIL WILL VARY BY MANUFACTURER

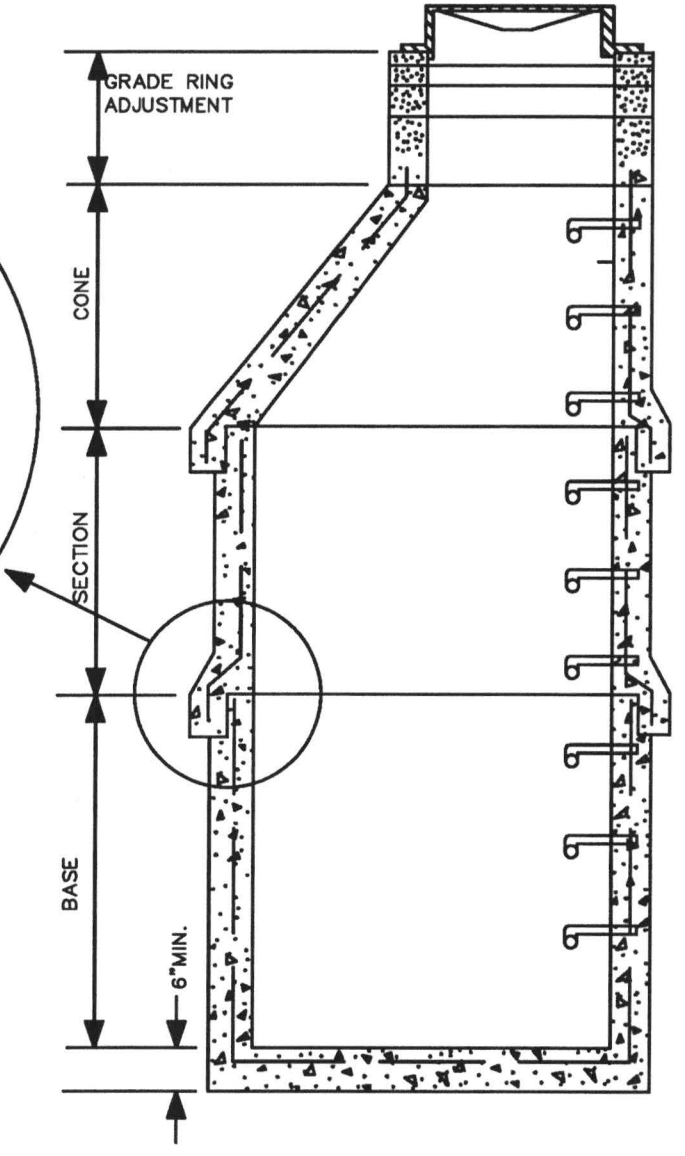

PRECAST RUBBER GASKET MANHOLE

DRAWING NO. 030

REVISED 02-03

Clean Water Services
Our commitment is clear.

NOTES:
1. ALL JOINTS AND RUBBER GASKETS SHALL CONFORM TO THE REQUIREMENTS OF ASTM C-433.
2. ALL MANHOLE SECTIONS SHALL CONFORM TO THE REQUIREMENTS OF ASTM C-478 AND APPLICABLE PROVISIONS OF STANDARD MANHOLE, DRAWING NO. 010.
3. STEPS REQUIRED ON FLAT TOP MANHOLES DEEPER THAN 48".
4. PROVIDE CENTER OPENING FLATOP FOR MANHOLE DEPTHS LESS THAN 36".

RUBBER GASKET FLAT TOP (OPTIONAL)

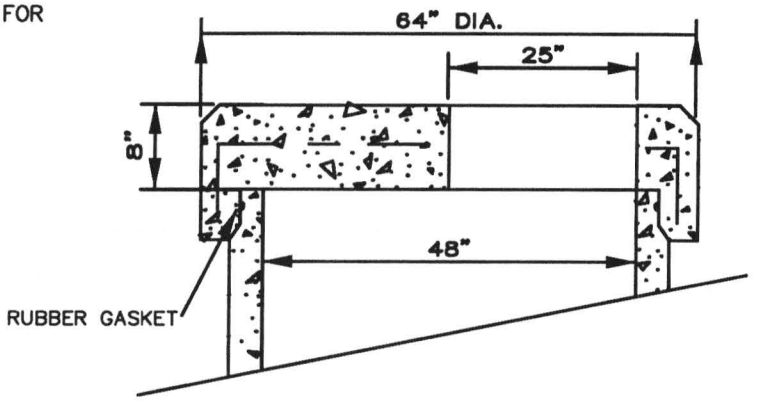

RUBBER GASKET FLAT TOP REINFORCEMENT

OR

STANDARD MANHOLE FLAT TOP REINFORCEMENT

#6 BAR AROUND OUTSIDE OF OPENING
#6 DIAGONALS BOTH SIDES OF OPENING
#6 6" O.C. BOTH WAYS

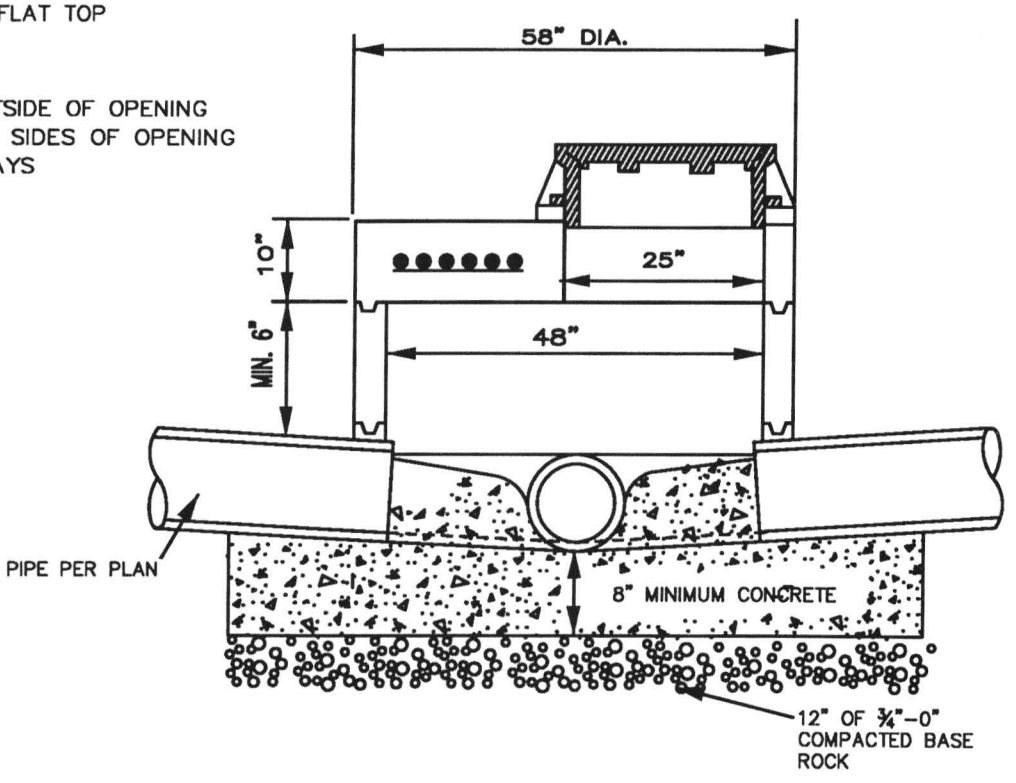

SHALLOW FLAT TOP MANHOLE

DRAWING NO. 040

REVISED 02-03

Clean Water Services
Our commitment is clear.

NOTES:
1. ALL JOINTS AND RUBBER GASKETS SHALL CONFORM TO THE REQUIREMENTS OF ASTM C-433.
2. ALL MANHOLE SECTIONS SHALL CONFORM TO THE REQUIREMENTS OF ASTM C-478 AND APPLICABLE PROVISIONS OF STANDARD MANHOLE, DRAWING NO. 010.
3. STEPS REQUIRED ON FLAT TOP MANHOLES DEEPER THAN 48".

RUBBER GASKET FLAT TOP (OPTIONAL)

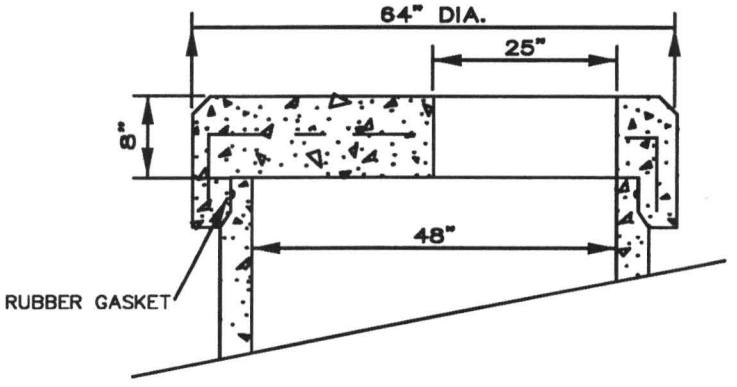

RUBBER GASKET FLAT TOP REINFORCEMENT

OR

STANDARD MANHOLE FLAT TOP REINFORCEMENT

#6 BAR AROUND OUTSIDE OF OPENING
#6 DIAGONALS BOTH SIDES OF OPENING
#6 6" O.C. BOTH WAYS

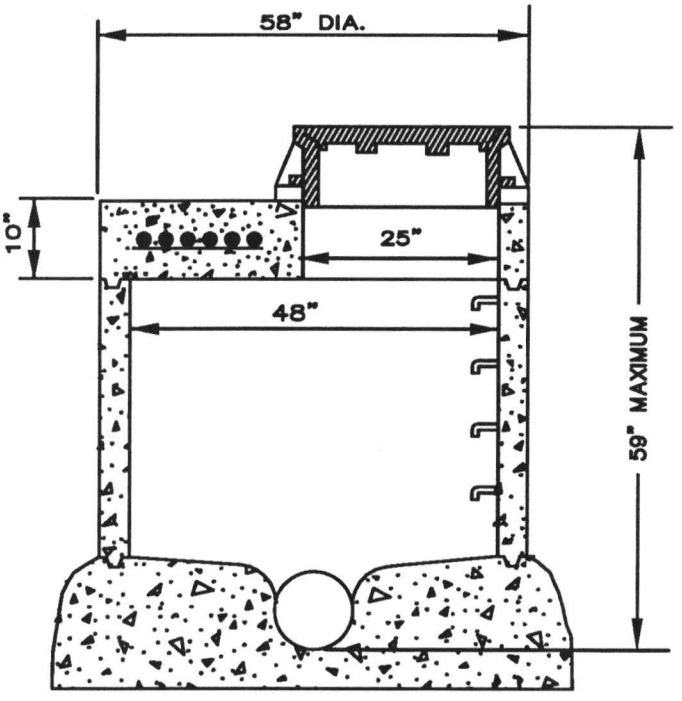

FLAT TOP MANHOLE

DRAWING NO. 050

REVISED 02-03

Clean Water Services
Our commitment is clear.

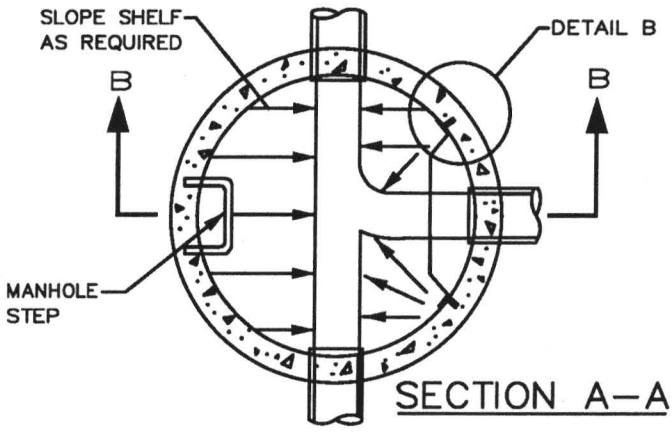

SECTION A–A

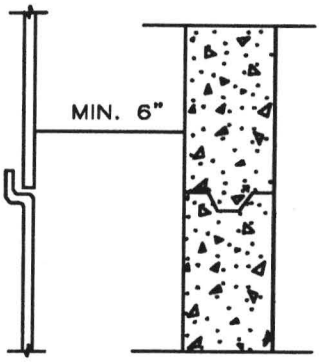

DETAIL A
(PARTITION LOCATION)

ALL MANHOLE SECTIONS SHALL CONFORM TO THE REQUIREMENTS OF ASTM C–478 AND APPLICABLE PROVISIONS OF STD. DRAWING NO. 010

ONLY ONE DROP ALLOWED PER MANHOLE

CABLE OR CHAIN FASTENED AT SAME ELEVATION AS FIRST STEP

DEFLECTION PLATE (DETAIL C)

A

A

INSPECTION AND CLEANOUT OPENING (DETAIL C)

10"MAX. DIA.

DETAIL A

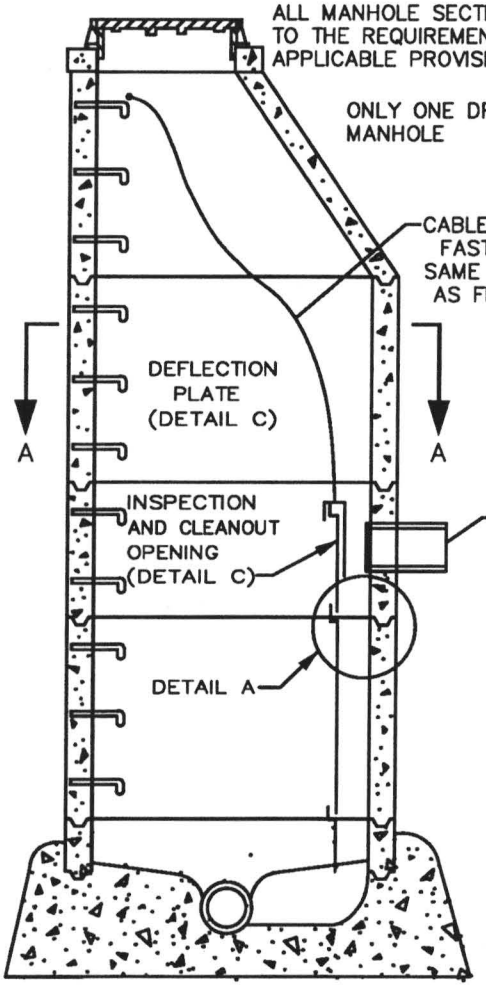

SECTION B–B

ANCHOR TO WALL WITH STAINLESS STEEL RISER CLAMP OR STAINLESS STEEL BAND AND STAINLESS STEEL EXPANSION ANCHORS MIN. 2 PLACES. STEEL BAND TO BE MIN. OF 2" WIDE

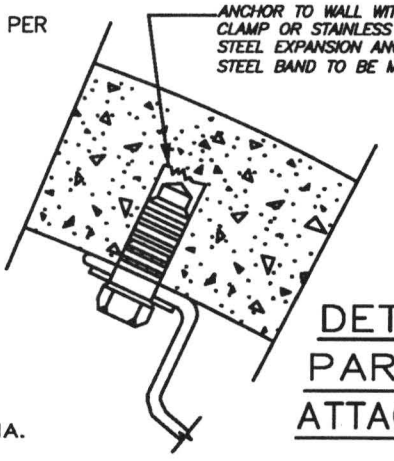

DETAIL B
PARTITION
ATTACHMENT

REMOVABLE DEFLECTION PLATE (MIN. 12" WIDTH) MATERIAL: STAINLESS STEEL, FIBERGLASS PLATE OR HDPE.

INSIDE DROP BOWL IS AN ALTERNATE WHEN INSTALLED AS APPROVED.

STAINLESS STEEL OR HDPE PARTITION: TOP PARTITION TO BE CUT SO THAT BOTTOM OF CUT MATCHES THE INVERT OF THE INCOMING PIPE. THE RADIUS OF THE CUT SHOULD MATCH THAT OF THE PIPE.

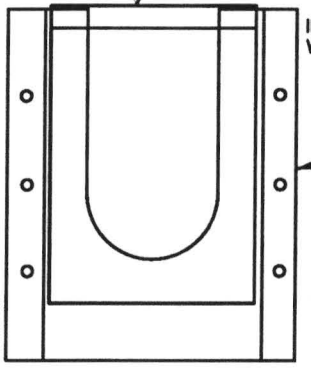

DETAIL C

INSIDE DROP MANHOLE

DRAWING NO. 070

REVISED 02–03

Clean Water Services
Our commitment is clear.

NOTES:

1. ALL MANHOLE 48" RISER SECTIONS SHALL CONFORM TO THE REQUIREMENTS OF ASTM C-478 AND APPLICABLE PROVISIONS OF STD. MANHOLE DRAWING NO. 010.
2. MAXIMUM FREE FALL FOR INSIDE DROP PIPE: SHALL BE 24" FOR SANITARY AND 48" FOR STORM; FROM FLOW LINE OF PIPE INVERT TO TOP OF SHELF.
3. INSIDE DROP PIPE TO EXTEND A MINIMUM OF 1" BEYOND SHELF.

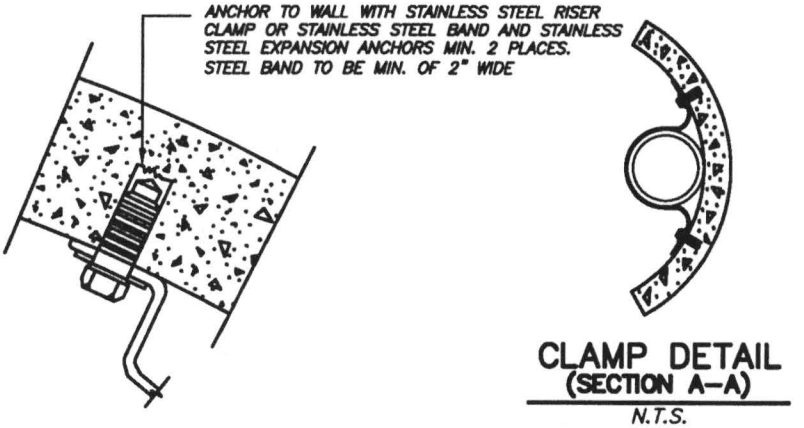

CLAMP DETAIL
(SECTION A-A)
N.T.S.

MECHANICAL INSIDE DROP (OPTIONAL)

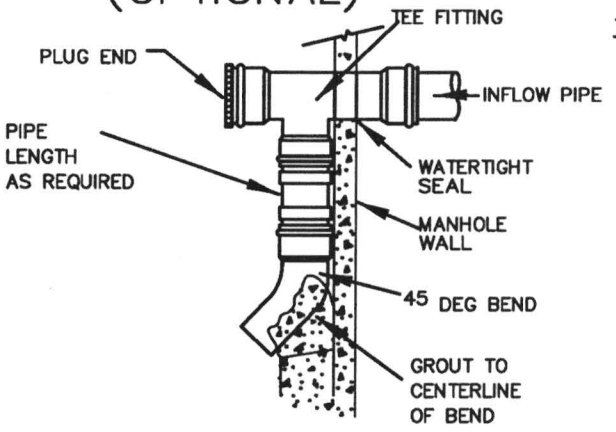

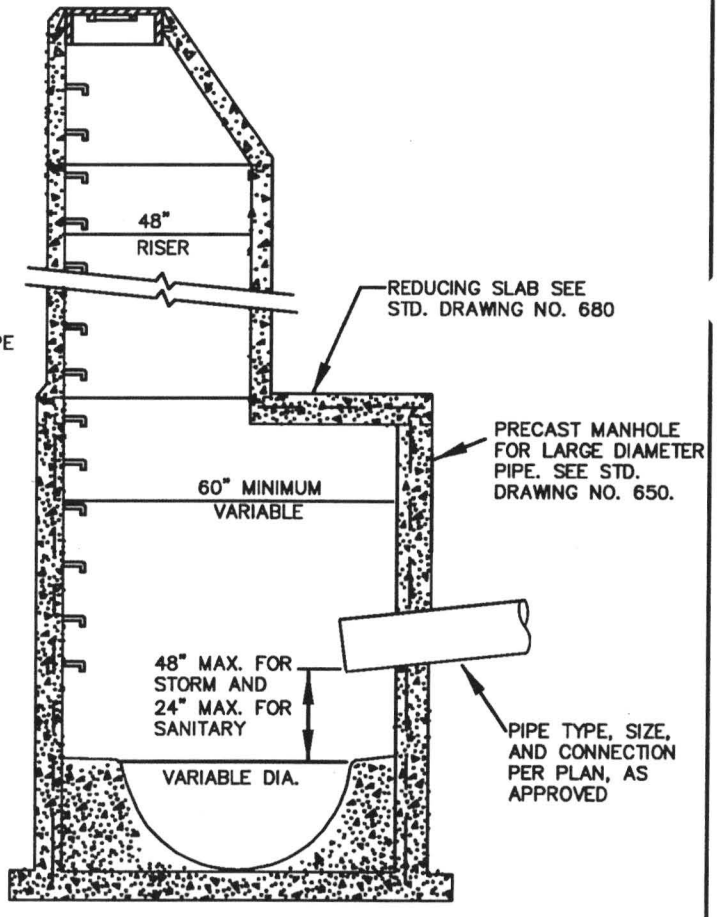

NOTES:

1. PIPE AND FITTINGS SHALL BE SAME SIZE AS INFLOW PIPE TO MANHOLE.
2. PIPE AND FITTINGS FOR DROP ASSEMBLY SHALL BE: DUCTILE IRON ANSI A21.50-1, AWWA C150-1, AWWA C-900 OR PVC ASTM 3034 SDR 35.

INSIDE DROP FOR LARGE-DIAMETER PIPE

DRAWING NO. 080

REVISED 02-03

Clean Water Services
Our commitment is clear.

NOTES:

1. ALL STEPS SHALL CONFORM TO THE REQUIREMENTS OF ASTM C-478.
2. MANHOLE STEPS MUST BE TIGHT AND FIRMLY EMBEDDED.
3. ALL STEPS WITHIN A MANHOLE SHALL BE OF THE SAME DESIGN, TYPE, AND SIZE. (MIXING OF UNMATCHED STEPS IS NOT PERMITTED).

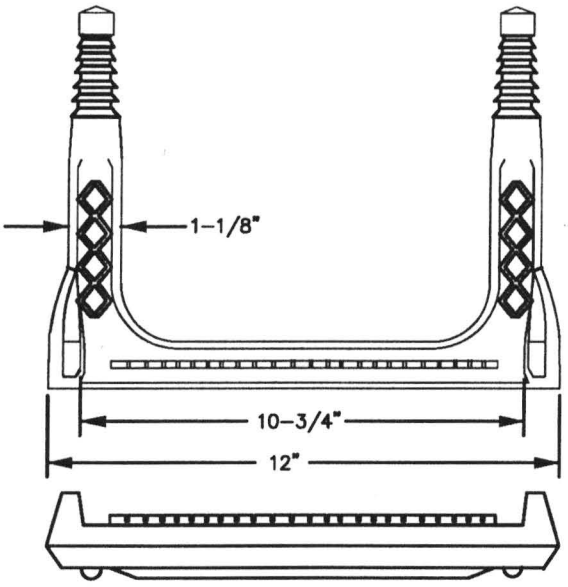

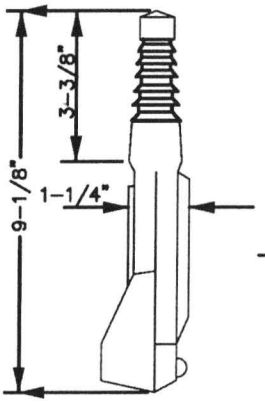

COPOLYMER POLYPROPYLENE PLASTIC

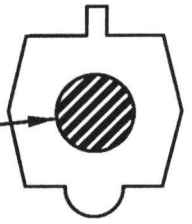

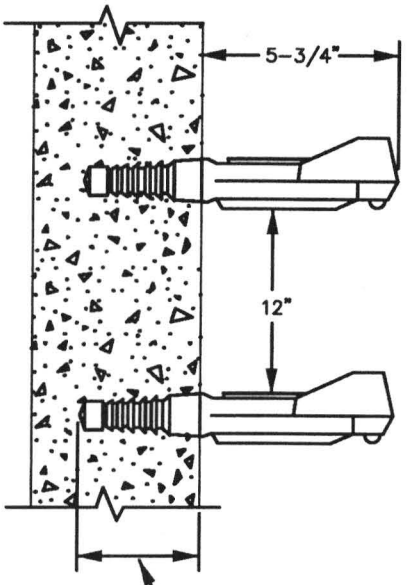

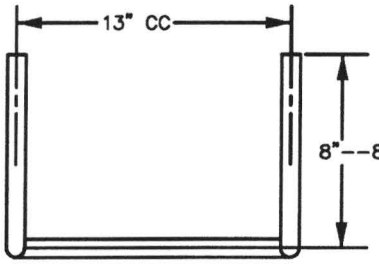

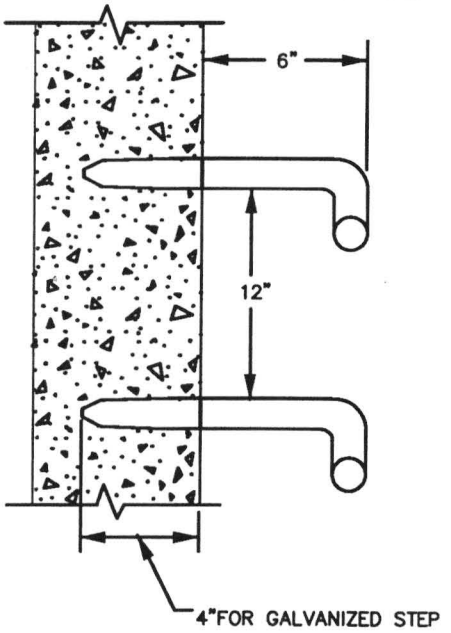



MATERIALS:

GALVANIZED:

#6 (3/4" DIA.) GALVANIZED DEFORMED REINFORCING BAR. REINFORCING BAR CONFORMING WITH ASTM A-615 GRADE 40. GALVANIZED CONFORMING WITH ASTM A-123.

PLASTIC:

MUST CONFORM WITH ASTM C-478.
STEEL REINFORCING BAR MINIMUM 1/2" GRADE 60.
MEETING REQUIREMENTS OF ASTM A615 ENCAPSULATED WITH INJECTION MOLDED COPOLYMER POLYPROPYLENE WITH SERRATED SURFACES.

MANHOLE STEP

DRAWING NO. 100

REVISED 02-03

Clean Water Services
Our commitment is clear.

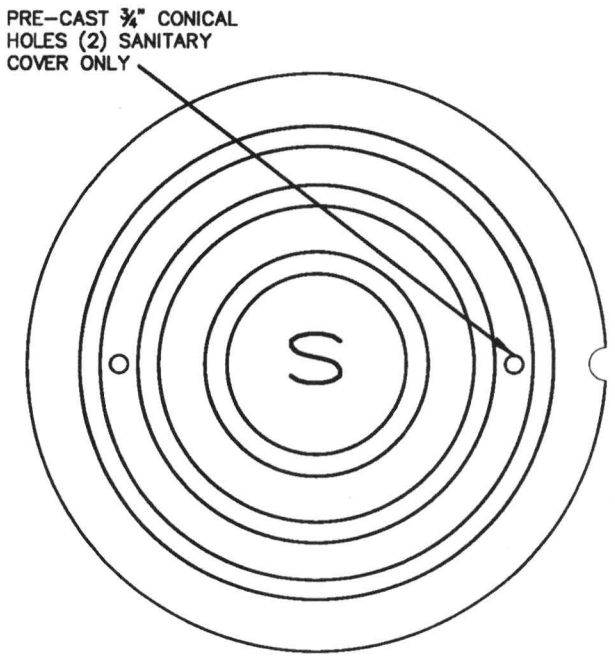

SANITARY

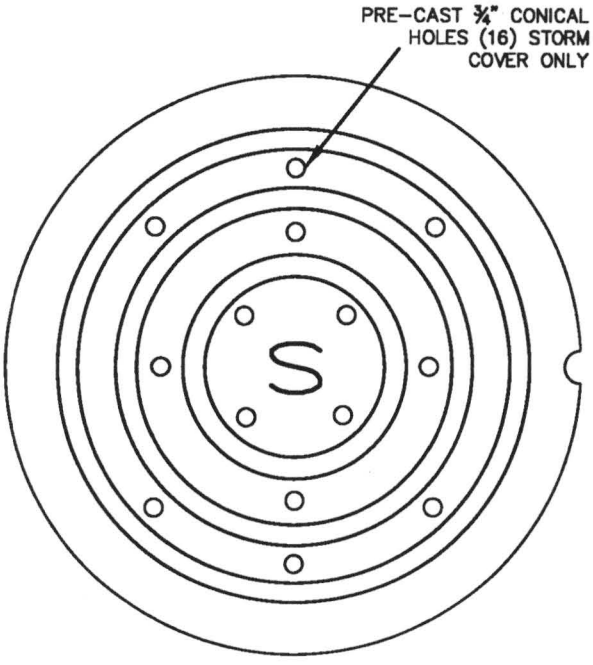

STORM

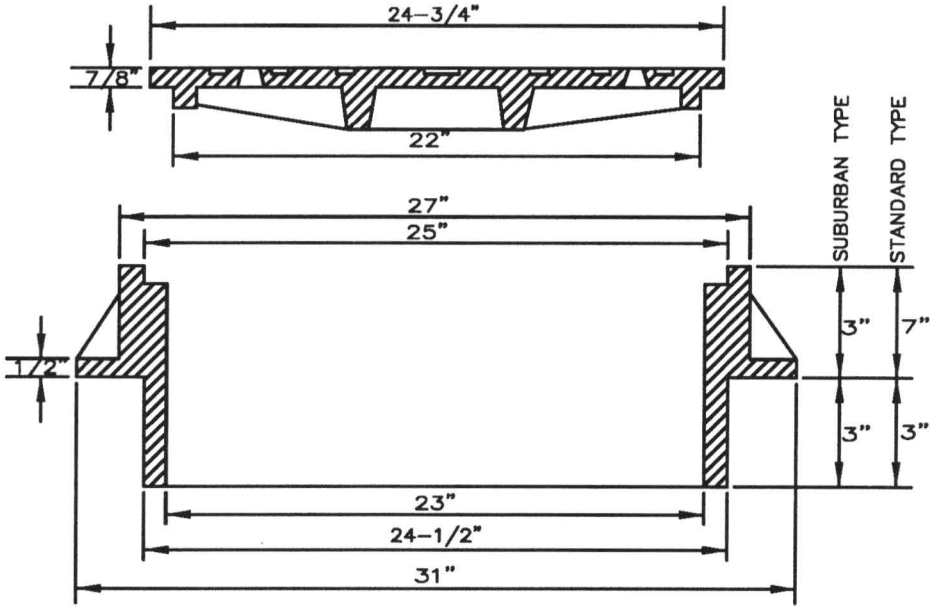

NOTES:

1. SUBURBAN TYPE NOT FOR USE IN TRAFFIC AREAS OF COLLECTOR AND ARTERIAL STREETS
2. COVER AND FRAME SHALL BE GRAY CAST IRON ASTM A-48 CLASS 30.
3. COVER AND FRAME TO BE MACHINED TO A TRUE BEARING ALL AROUND.
4. NOTCH LID FOR LIFTING HOOK.

SUBURBAN AND STANDARD MANHOLE FRAME AND COVER

DRAWING NO. 110-SA/ST

REVISED 02-03

Clean Water Services

Our commitment is clear.

WATERTIGHT MANHOLE RING

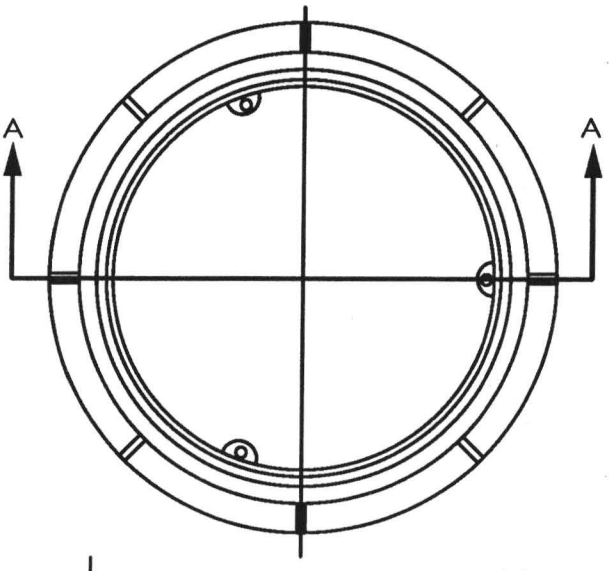

SECTION A–A

3–BOLT DOWN COVER

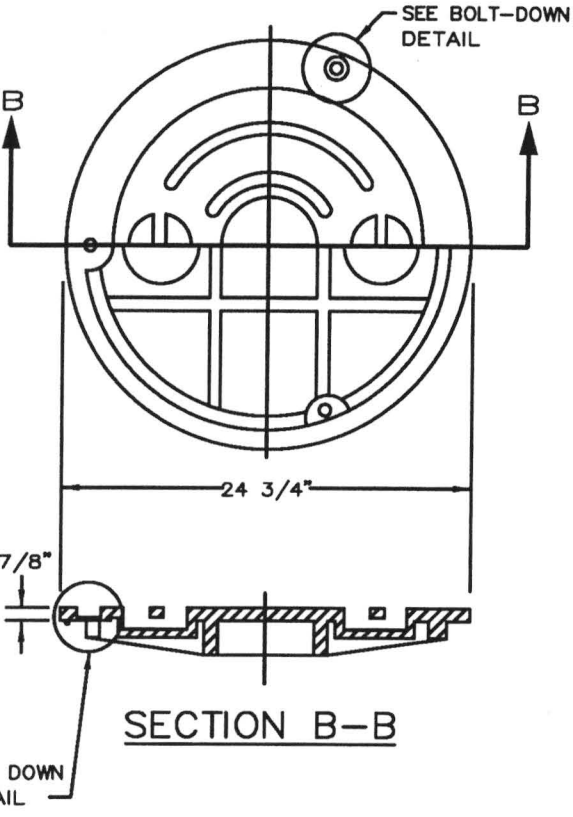

SECTION B–B

NOTE;
WATERTIGHT/TAMPER PROOF MANHOLE FRAME AND COVER SHALL BE USED IN ALL EASEMENT AND OFF STREET AREAS.

BOLT–DOWN DETAIL

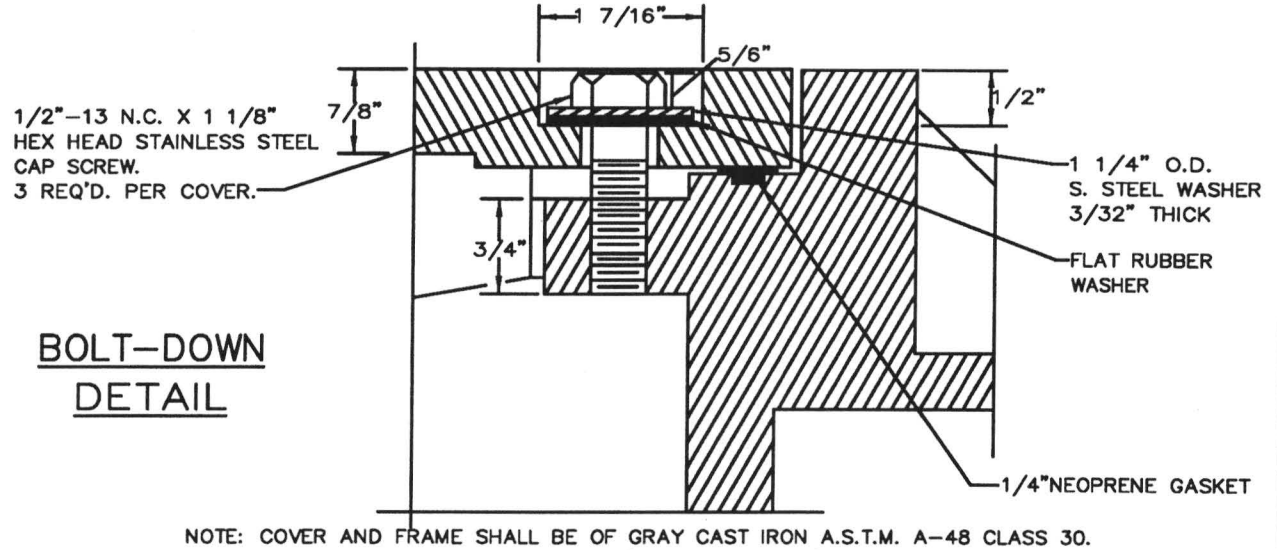

NOTE: COVER AND FRAME SHALL BE OF GRAY CAST IRON A.S.T.M. A–48 CLASS 30.
TAMPER PROOF (REMOVE GASKETS)

WATERTIGHT MANHOLE FRAME AND COVER

DRAWING NO. 120

REVISED 02–03

Clean Water Services
Our commitment is clear.

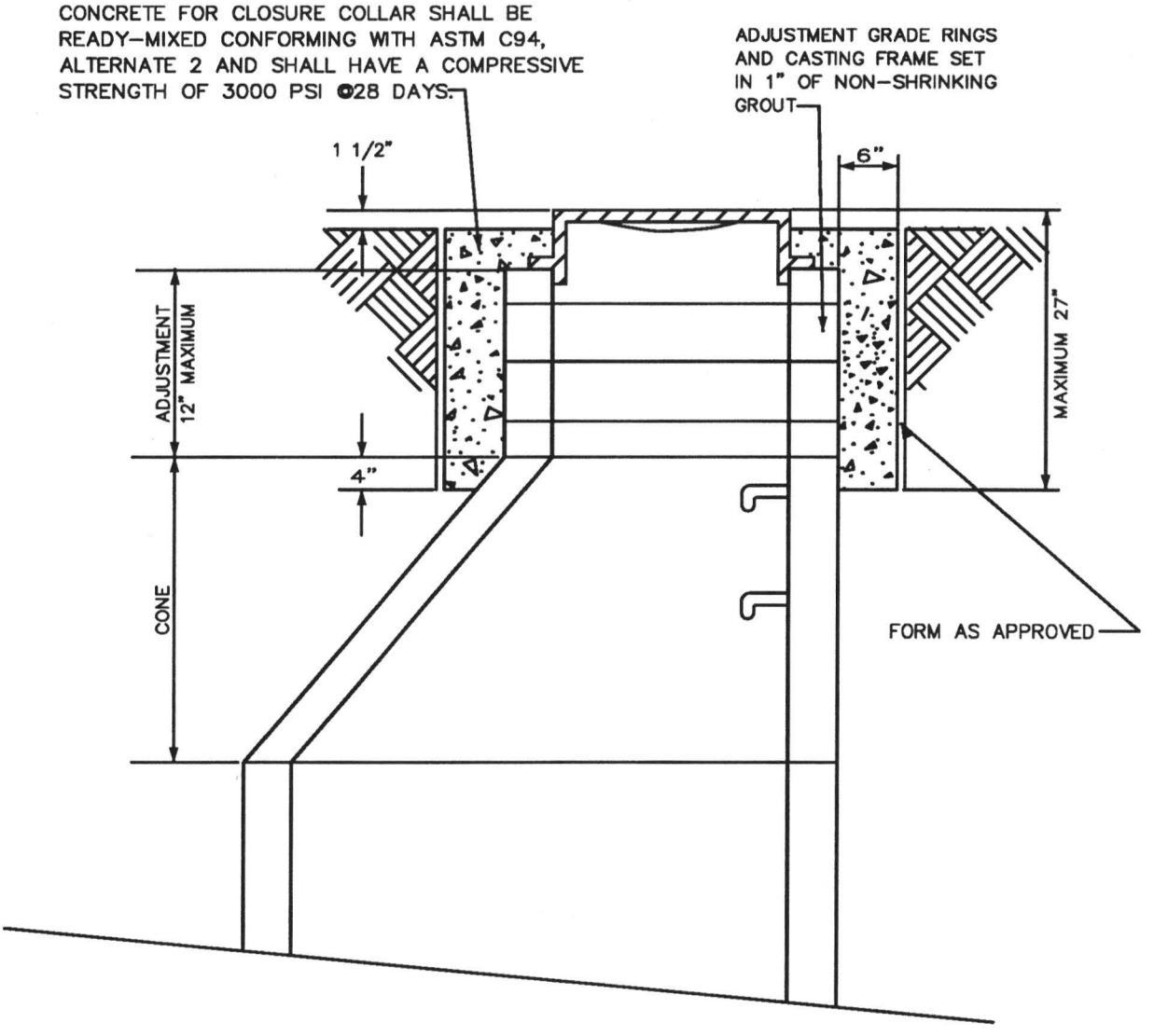

CONCRETE MANHOLE CLOSURE COLLAR

DRAWING NO. 130

REVISED 02-03

Clean Water Services
Our commitment is clear.

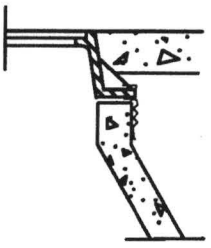

NARROW EXTERNAL RUBBER SEAL

TO SPAN CHIMNEY HEIGHTS OF:

0–3"	–	NARROW (6") SEAL ONLY
OVER 3" – 6 1/2"	–	STANDARD (9") SEAL ONLY
OVER 6 1/2" – 12"	–	STD. SEAL + EXTENSION
OVER 12"	–	SEAL + MULT. EXTENSIONS

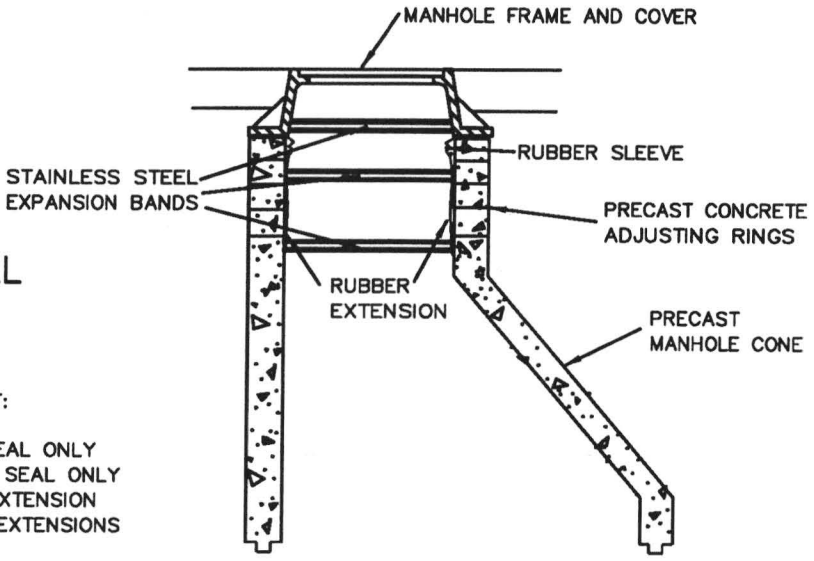

INTERNAL MANHOLE CHIMNEY SEAL

NOTES:

1. SLEEVES AND EXTENSIONS SHALL HAVE A MINIMUM OF 3/16" THICKNESS.
2. RUBBER SHALL BE EXTRUDED HIGH GRADE COMPOUND CONFORMING TO ASTM C–923.
3. BANDS SHALL BE FABRICATED FROM 16 GAUGE STAINLESS STEEL CONFORMING TO ASTM A–240, TYPE 304.
4. NUTS AND BOLTS SHALL BE STAINLESS STEEL CONFORMING TO ASTM F–593 AND 594, TYPE 304.
5. ALL GRADE RING AND CASTING FRAME SHALL BE SET IN NON–SHRINKING GROUT.
6. PRECAST MANHOLE SECTIONS SHALL CONFORM TO THE REQUIREMENTS OF ASTM C–478, AND APPLICABLE PROVISIONS OF STANDARD MANHOLE DRAWING NO. 010.

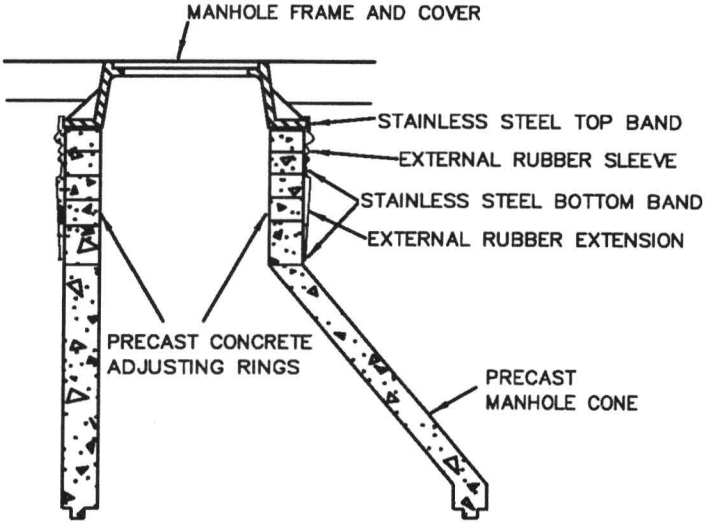

TO SPAN CHIMNEY HEIGHTS OF:

0–4 1/2"	–	CHIMNEY SEAL ONLY
OVER 4 1/2" – 9"	–	SEAL + 7" EXTENSION
OVER 9"– 12"	–	SEAL + 10" EXTENSION
OVER 12"	–	SEAL + MULT. EXTENSIONS

EXTERNAL MANHOLE CHIMNEY SEAL

MANHOLE CHIMNEY SEAL

DRAWING NO. 140

REVISED 02–03

Clean Water Services
Our commitment is clear.

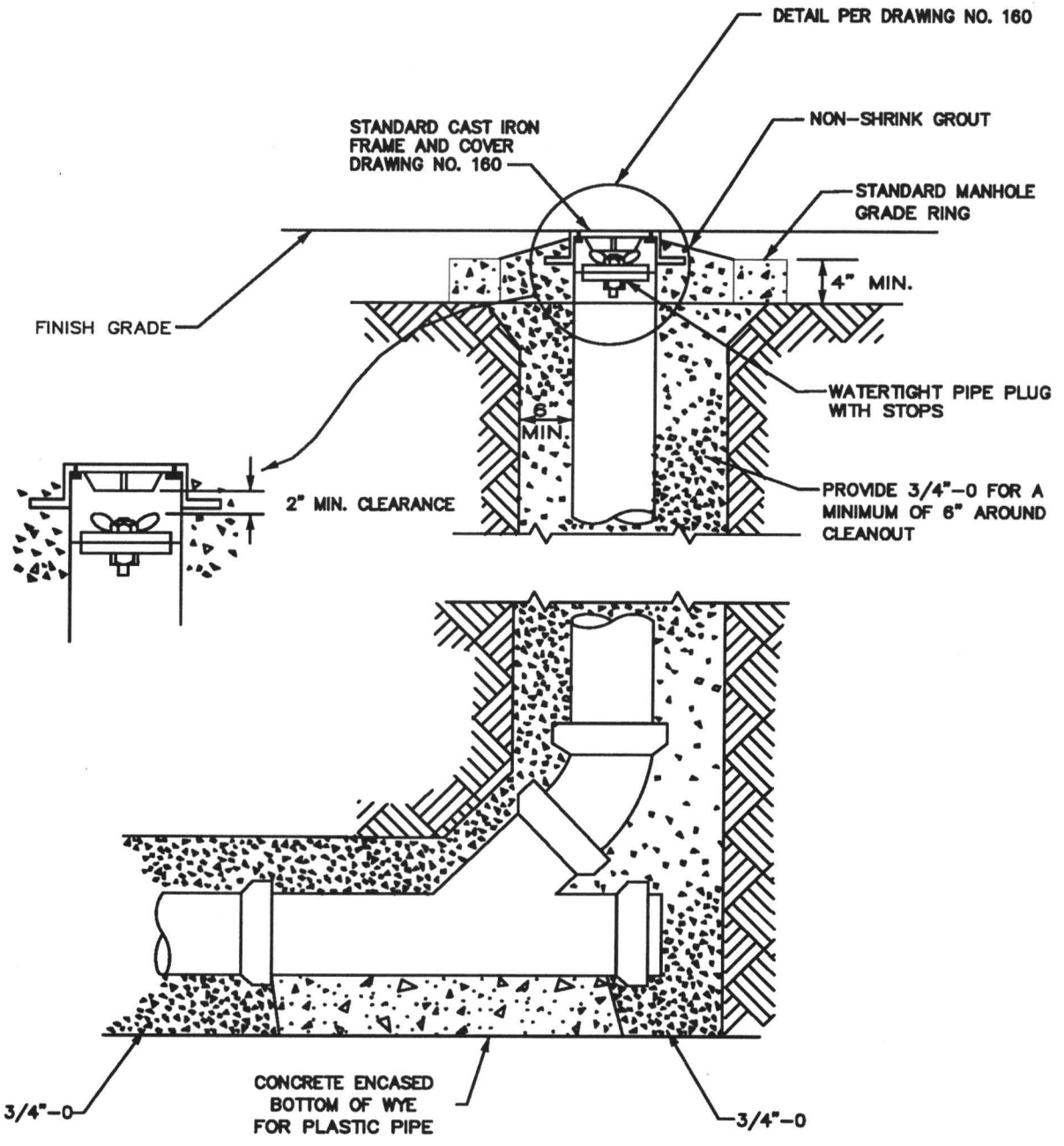

NOTE: CONCRETE ENCASE ENTIRE WYE SECTION AND 45° BEND IF CONCRETE PIPE

STANDARD CLEANOUT

DRAWING NO. 150

REVISED 02-03

Clean Water Services
Our commitment is clear.

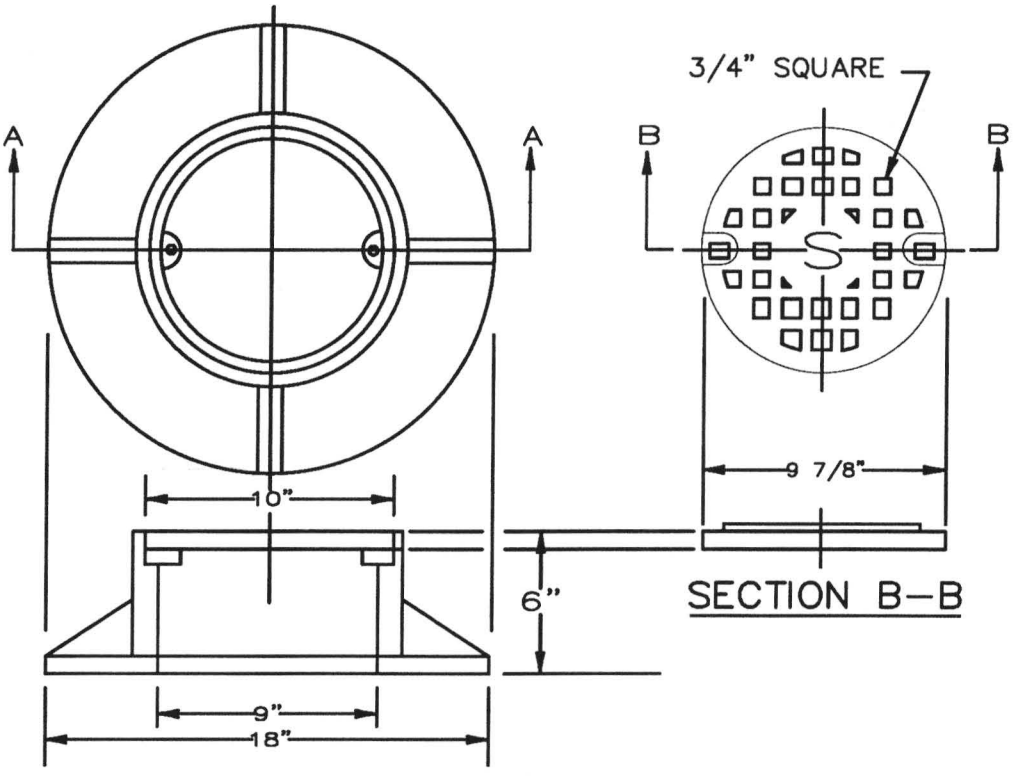

SECTION A–A

SECTION B–B

NOTES:
1. ¼" ALLEN HEAD BOLTS 1" LONG RECESSED.
2. ALL PERMANANT CLEANOUTS TO HAVE BOLT DOWN COVERS.
3. MATERIAL SHALL BE GRAY CASTIRON, ASTM A–48, CLASS 30.

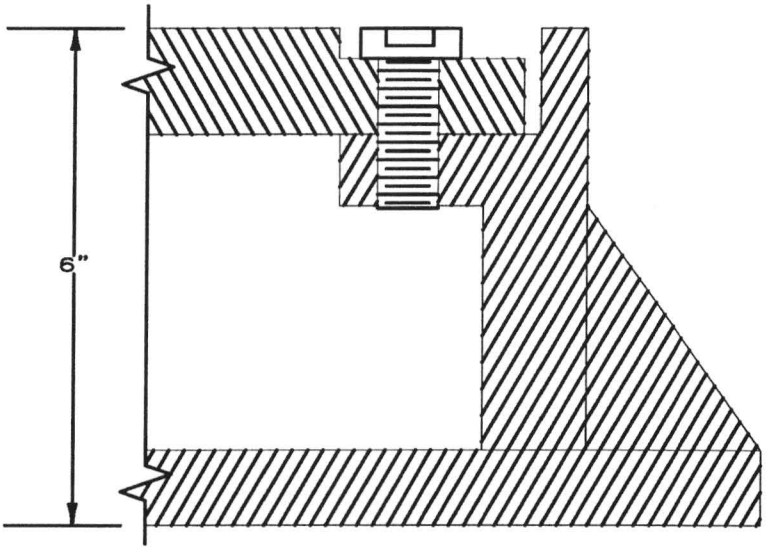

DETAIL

CLEANOUT FRAME AND COVER

DRAWING NO. 160

REVISED 02–03

Clean Water Services
Our commitment is clear.

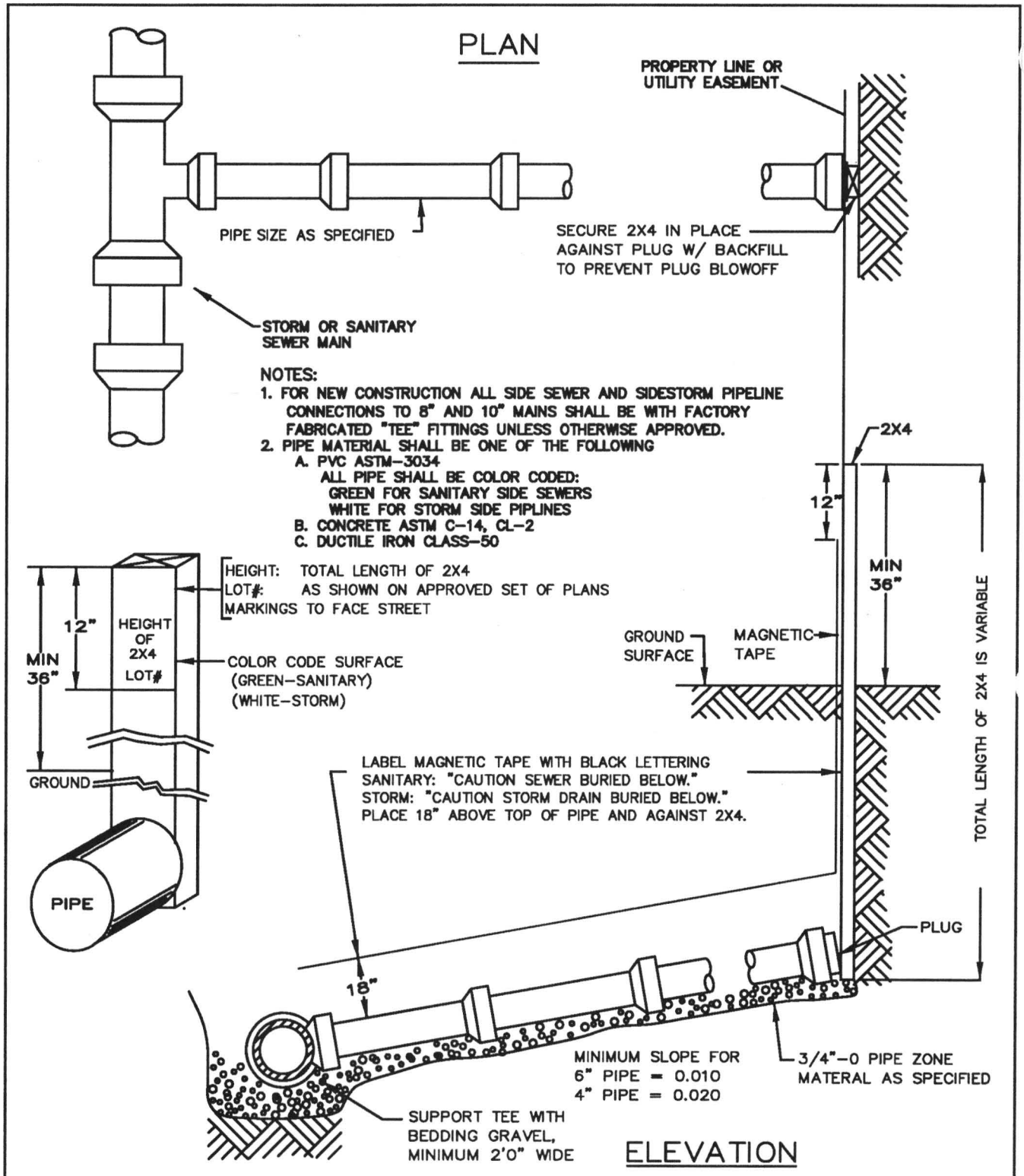

SIDE SEWER / SIDE STORM PIPELINE

DRAWING NO. 170

REVISED 02-03

Clean Water Services
Our commitment is clear.

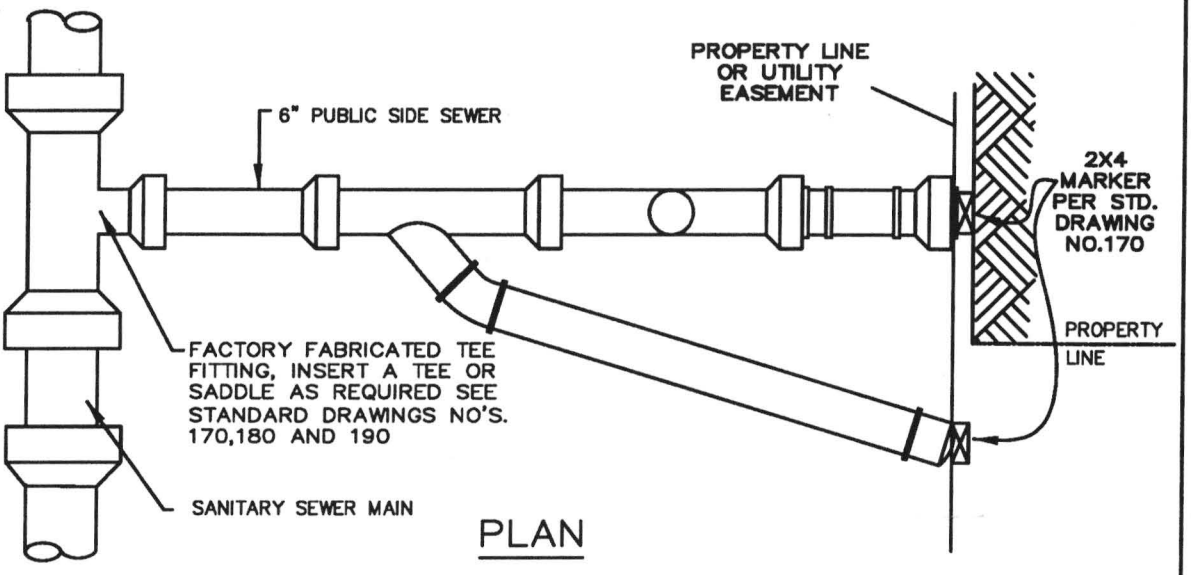

PLAN

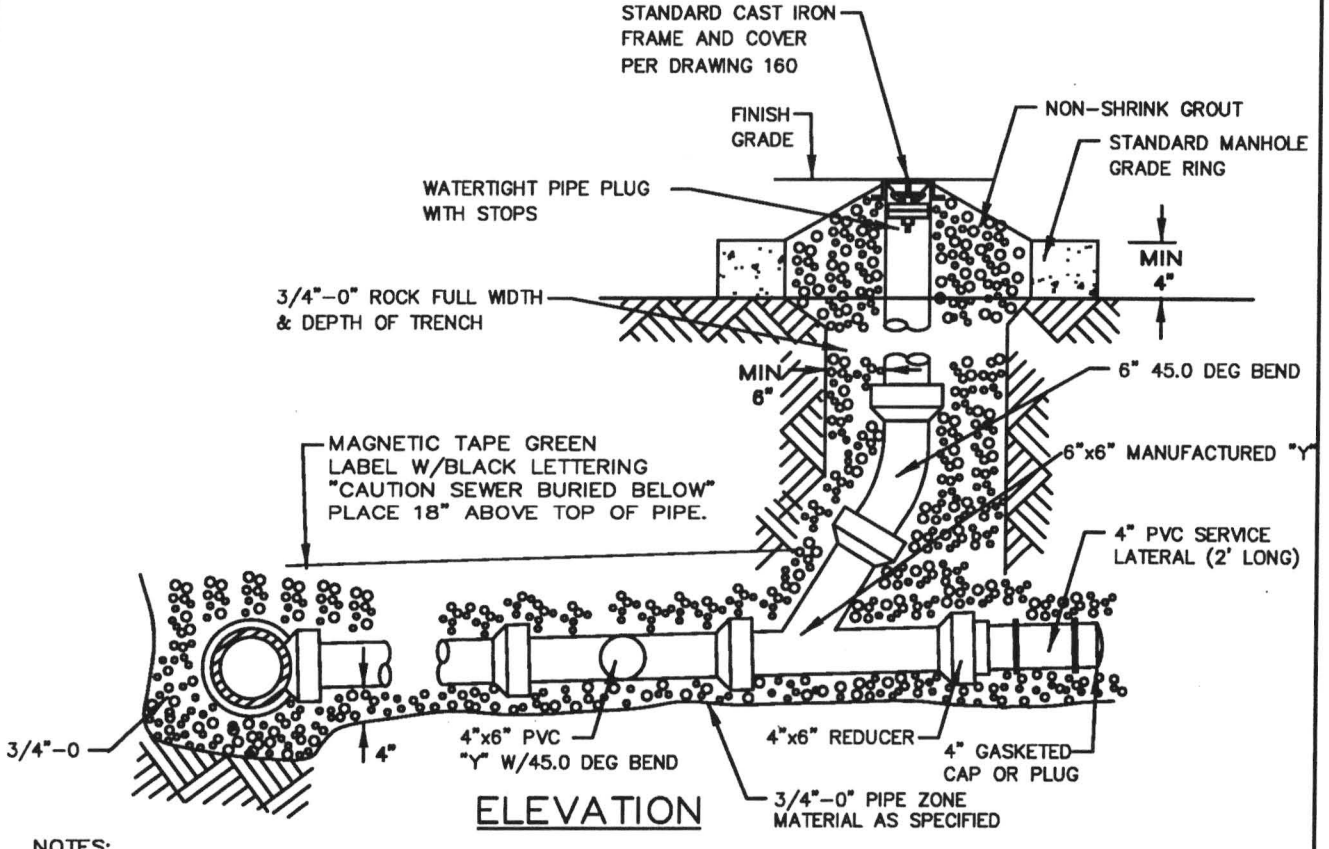

ELEVATION

NOTES:
1. 2x4 SHALL BE INSTALLED AT THE END OF BOTH 4" SIDE SEWERS AND EXTENDED 3' ABOVE FINISH GRADE PER STD. DRAWING NO 170.
2. 6" PUBLIC SIDE SEWER SHALL BE LAID AT A MIN OF 0.60 PER 100 FEET.
3. DO NOT PLACE CLEANOUT IN PAVED STREET OR SIDEWALK AREA.
4. PIPE MATERIAL AND COLOR CODE PER STD. DRAWING NO. 170.

6" PUBLIC SIDE SEWER

DRAWING NO. 175

REVISED 02-03

Clean Water Services
Our commitment is clear.

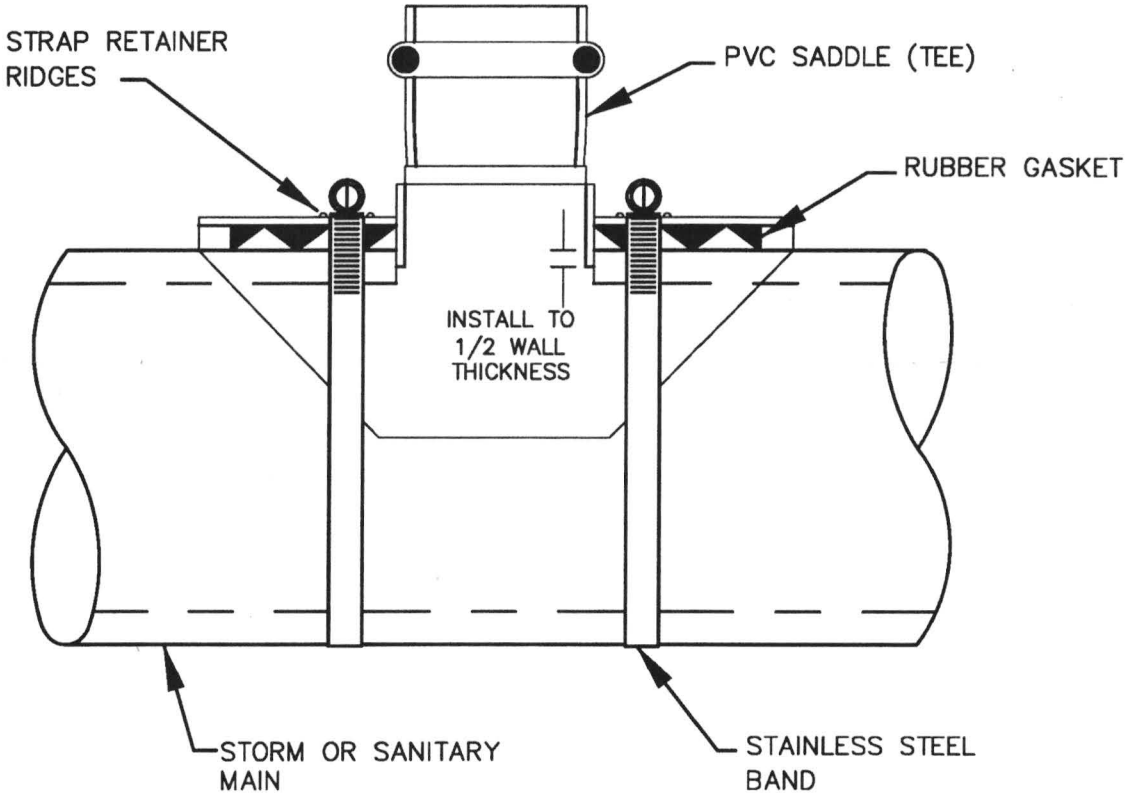

NOTES:

1. INDEXED PVC GASKETED SADDLE SHALL CONFORM TO ASTM 3034 SDR35.
2. PVC COMPOUNDS SHALL CONFORM TO ASTM D1784 WITH CELL CLASS OF 12454-B/C OR 12364-C.
3. ALL ELASTOMERIC SEALS (RUBBER GASKETS) SHALL CONFORM TO ASTM F477.
4. INDEXED PVC GASKETED SADDLE SHALL BE INSTALLED WITH RUBBER GASKETS APPROVED FOR THE SEWER MAIN WALL CONFIGURATION (PROFILE OR SMOOTH WALL).
5. STAINLESS STEEL BANDS SHALL BE 300 SERIES, 9/16" BAND WIDTH, CADMIUM PLATED, CARBON STEEL, AND ATTACHED WITH HEX HEAD, SLOTTED SCREWS.
6. INSERTION HOLE SHALL BE CORE DRILLED.

INDEXED PVC GASKETED SADDLE

DRAWING NO. 180

REVISED 02-03

Clean Water Services
Our commitment is clear.

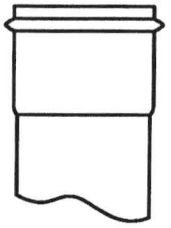

1. PVC HUB SHALL CONFORM TO ASTM 3034, SDR 35 DRIVE INTO CENTER OF RUBBER SLEEVE AFTER SLEEVE IS PLACED IN HOLE.



2. STAINLESS STEEL BAND SECURES UPPER HALF OF RUBBER SLEEVE TO THE PVC HUB. STAINLESS STEEL BAND SHALL BE 300 SERIES, 9/16" BAND WIDTH, CADMIUM PLATED CARBON STEEL, AND ATTACHED WITH HEX HEAD SLOTTED SCREW.



3. COMPLETE RUBBER SLEEVE INCLUDES A MOLDED SEGMENT THAT HOLDS IT IN PLACE.
4. INSERTA TEE SHALL BE USED ONLY IN SEWER MAINS 10" AND LARGER INSIDE DIAMETER (I.D.)
5. SEWER MAIN SHALL BE TWO SIZES (NOMINAL I.D.) LARGER THAN THE INSERTA TEE.

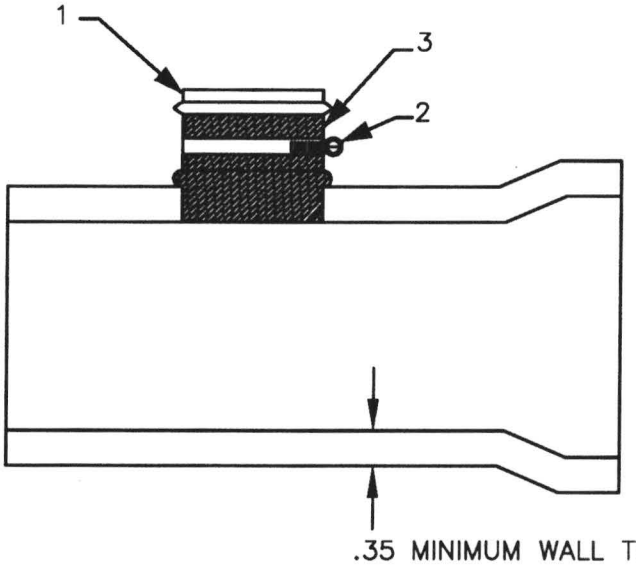

NOTE:
ALL INSERTA–TEE HOLES SHALL BE MACHINE DRILLED AND CORED.

INSERTA–TEE

DRAWING NO. 190

REVISED 02–03

Clean Water Services
Our commitment is clear.

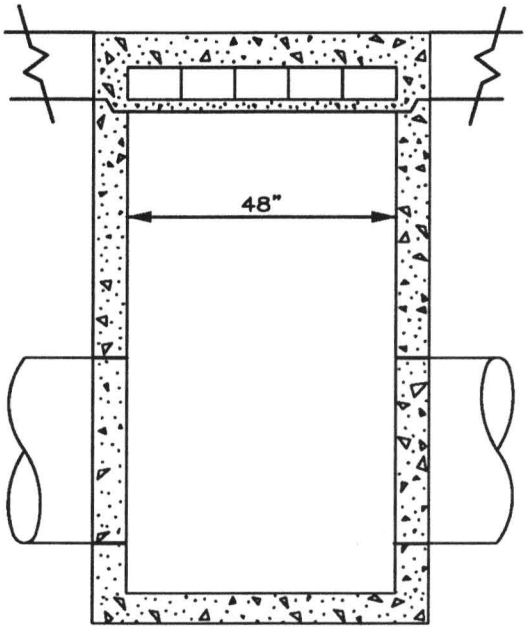

SECTION B–B

SEE STD. DRAWING NO. 200
FOR TOP SECTION DETAILS

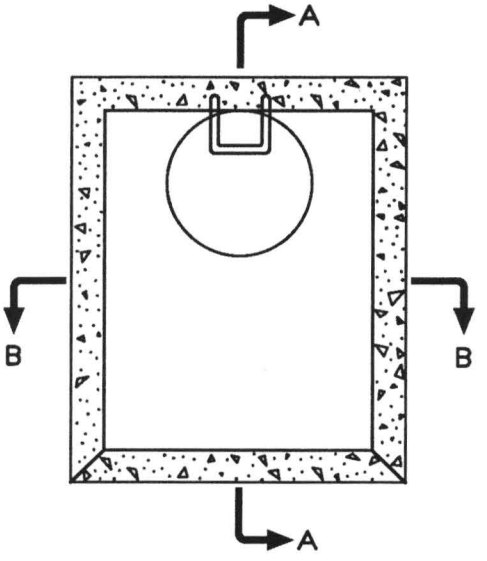

PLAN VIEW

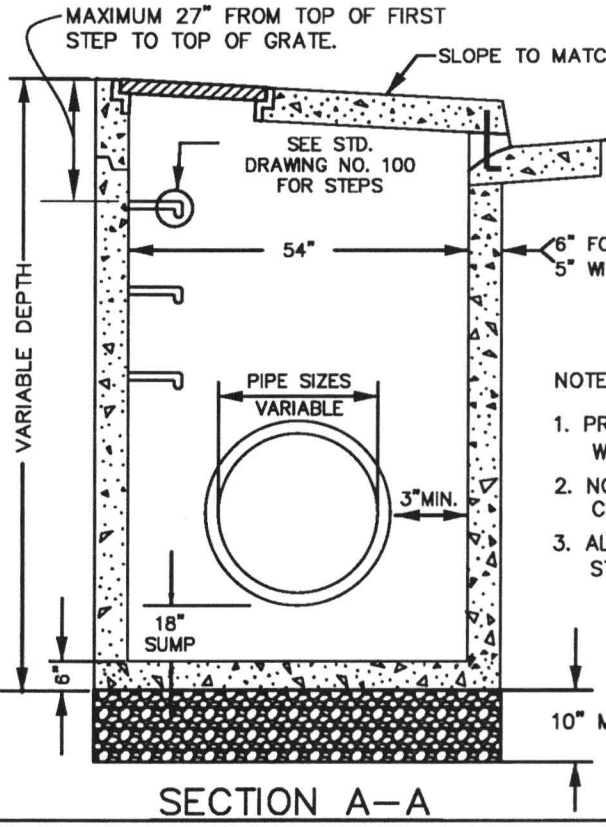

SECTION A–A

NOTES:

1. PRECAST CATCH BASIN SHALL BE CONSTRUCTED IN ACCORDANCE WITH ASTM C–478.
2. NON–SUMP INLET MANHOLE SHALL BE CHANNELED.
3. ALL POURED IN PLACE CONCRETE SHALL HAVE A 28 DAY STRENGTH OF 3000 PSI. AND A SUMP OF 2" TO 4"

CURB INLET MANHOLE (CG–48 M.H.)

DRAWING NO. 195

REVISED 02–03

Clean Water Services
Our commitment is clear.

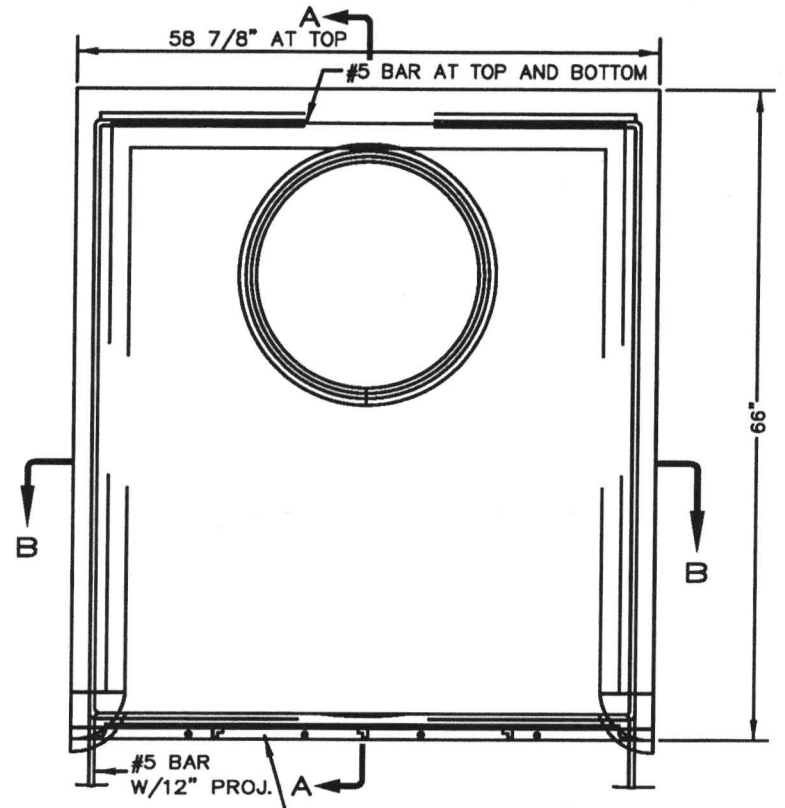

PLAN VIEW

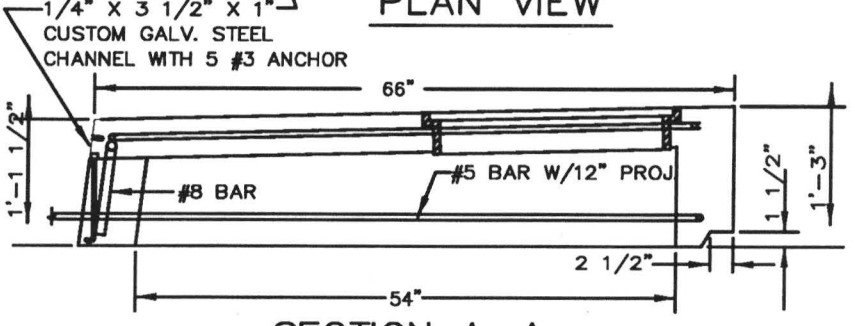

SECTION A–A

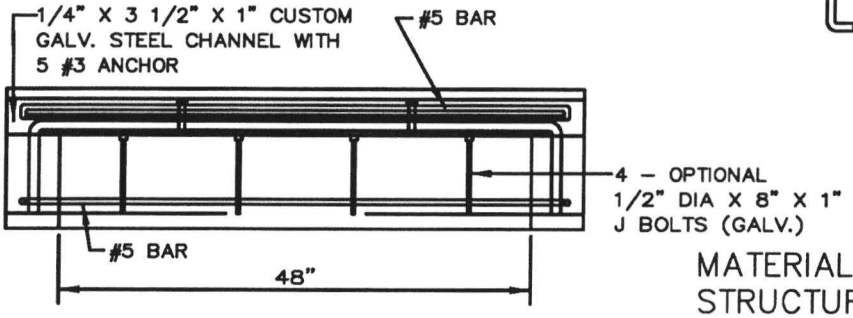

SECTION B–B

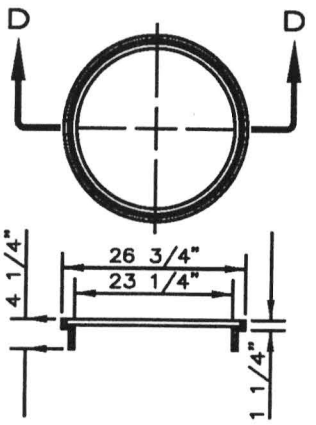

SECTION D–D

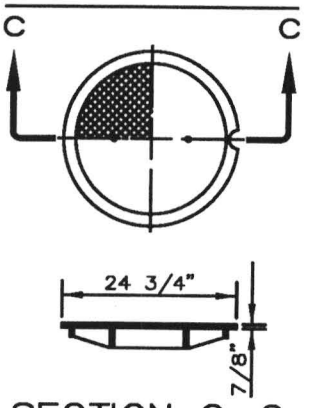

SECTION C–C

MANHOLE FRAME AND COVER

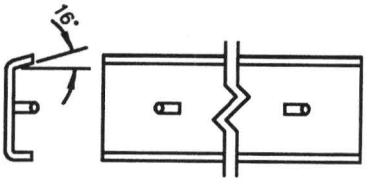

CUSTOM STEEL CHANNEL DETAIL

MATERIAL SHALL BE NEW STRUCTURAL ASTM A–36 STEEL

TOP–CURB INLET MANHOLE AND MODIFIED CURB INLET MANHOLE (CG–48 M.H. AND MOD. CG–48 M.H.)

DRAWING NO. 200

Clean Water Services
Our commitment is clear.

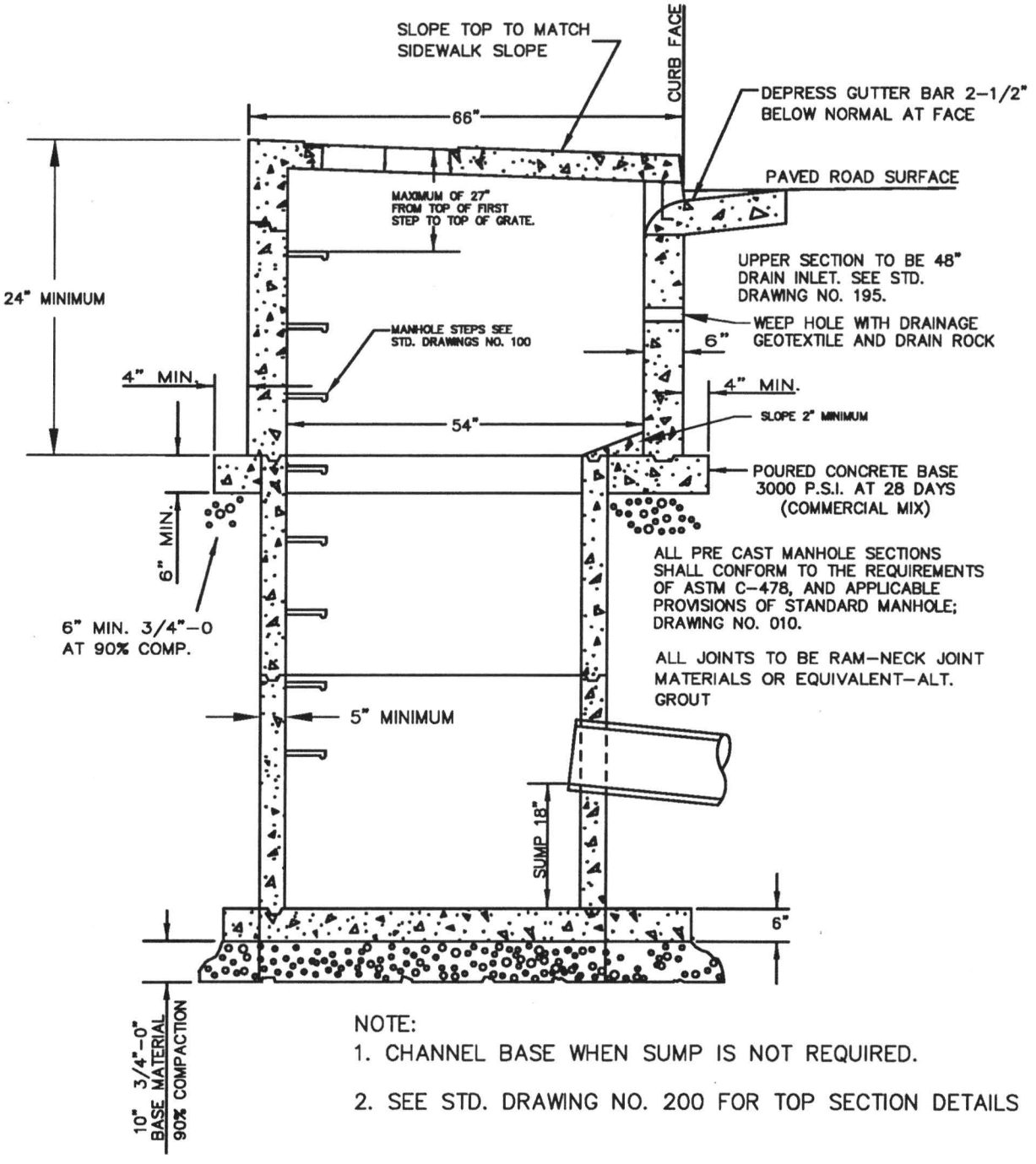

NOTE:

1. CHANNEL BASE WHEN SUMP IS NOT REQUIRED.
2. SEE STD. DRAWING NO. 200 FOR TOP SECTION DETAILS

APPROVED FOR USE BY WASHINGTON COUNTY ONLY.

MODIFIED CURB INLET MANHOLE (MOD.CG-48MH)

DRAWING NO. 205

REVISED 02-03

Clean Water Services
Our commitment is clear.

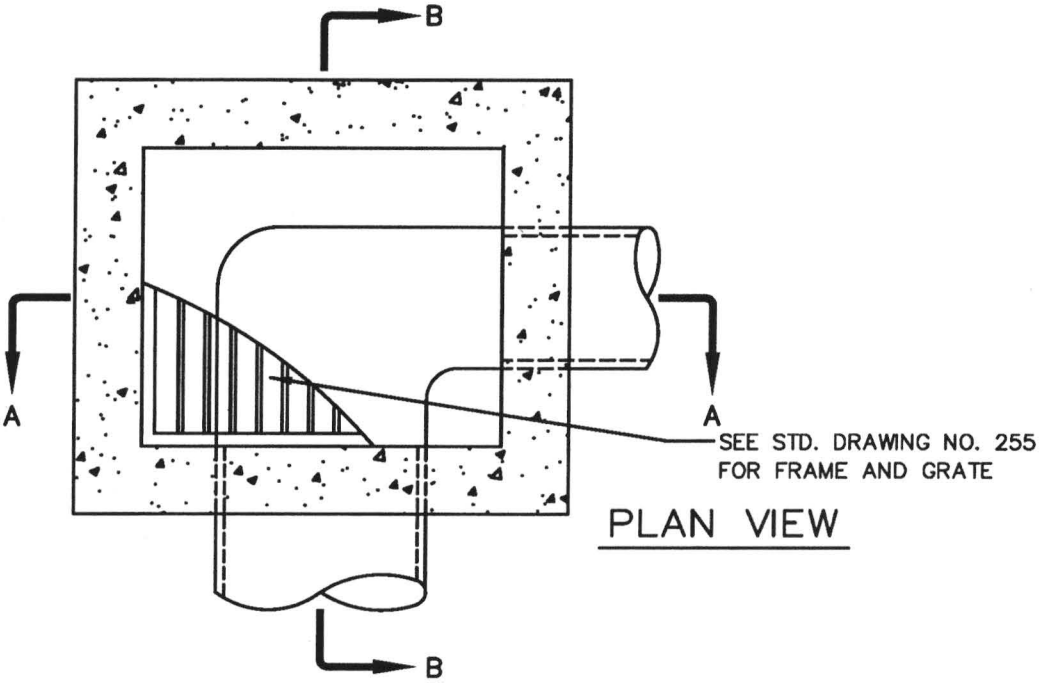

PLAN VIEW

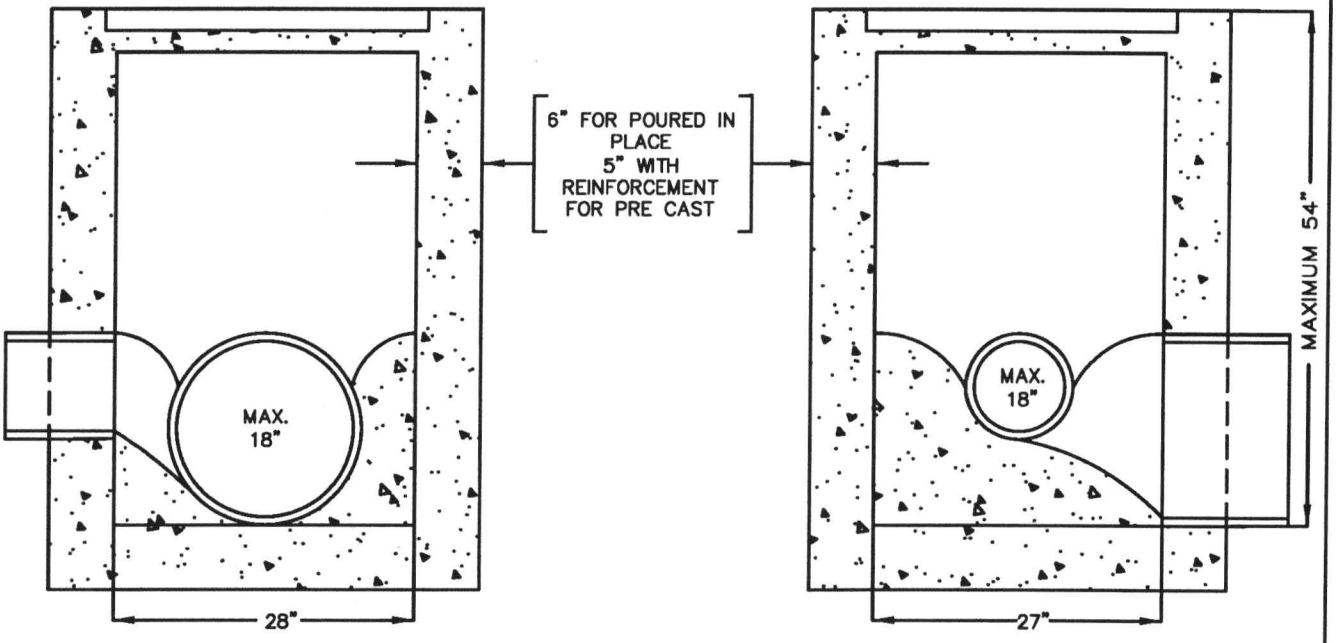

SECTION A–A

SECTION B–B

NOTES:
1. ALL PRE CAST SECTIONS SHALL CONFORM TO REQUIREMENTS OF ASTM C–478.
2. INSTALL STRUCTURE ON MIN. OF 8" OF ¾"–0" COMPACTED BASE MATERIAL.
3. PRE CAST REINFORCEMENT SHALL BE REBAR MEETING ASTM A615 GRADE OR WELDED WIRE MEETING ASTM A497.
4. ALL POURED INPLACE CONCRETE SHALL HAVE A 28 DAY STRENGTH OF 3000 P.S.I. AND A SLUMP OF 2" TO 4".
5. CHANNEL REQUIRED IN FLOW THROUGH APPLICATIONS, AS APPROVED. ALL OTHER APPLICATIONS REQUIRE AN 18" SUMP BELOW LOWEST PIPE INVERT.

AREA DRAIN TYPE II

DRAWING NO. 220

REVISED 02–03

Clean Water Services
Our commitment is clear.

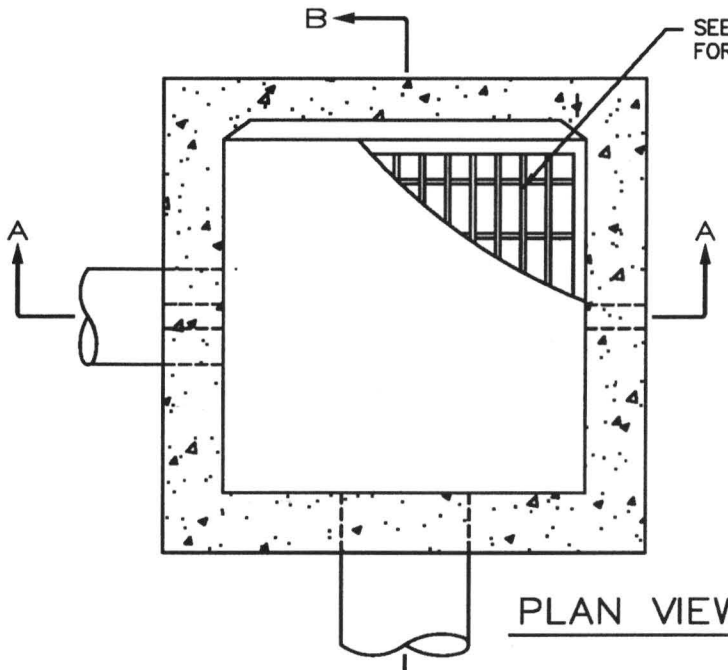

SEE STANDARD DRAWING NO. 255 FOR FRAME AND COVER.

PLAN VIEW

RECESSED CURB INLETS TO BE REINFORCED CONCRETE INSTALLED IN ACCORDANCE WITH DRAWING NO. 226

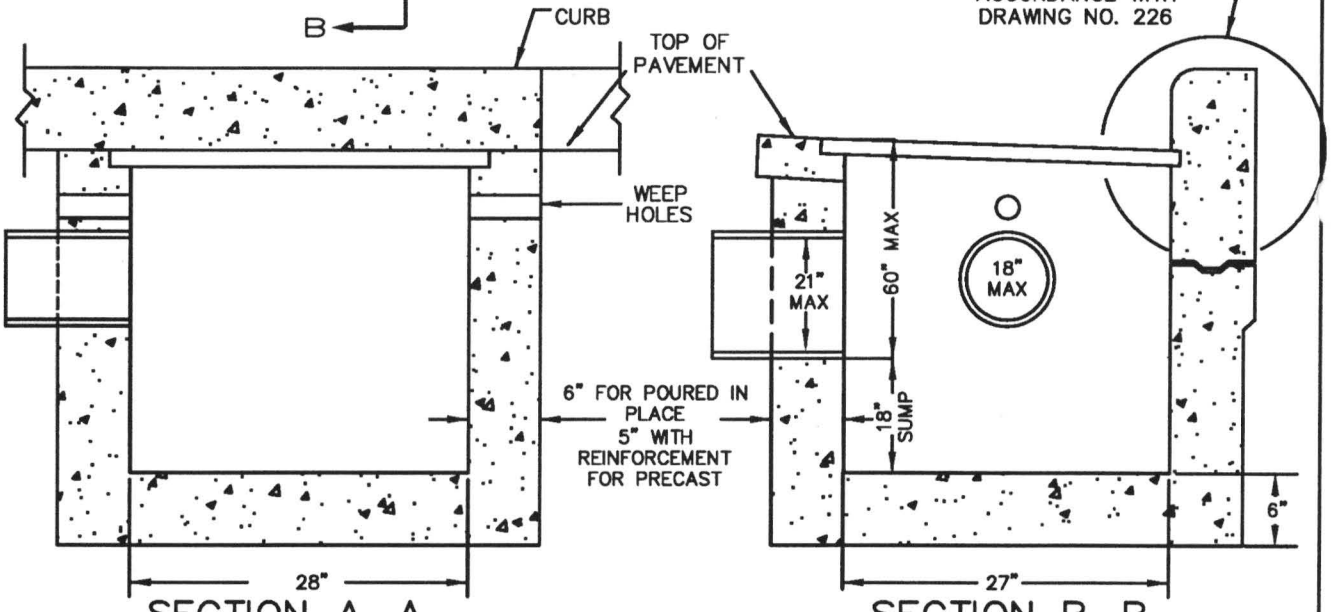

SECTION A–A

SECTION B–B

NOTES:

1. CATCH BASIN SHALL BE CONSTRUCTED IN ACCORDANCE WITH ASTM C-478.
2. INSTALL STEPS WHEN DISTANCE FROM TOP OF GRATE TO FLOWLINE OF PIPE IS GREATER THAN 48". SEE STANDARD DRAWING NO. 100. SET FIRST STEP 12" FROM TOP OF GRATE.
3. INSTALL STRUCTURE ON MINIMUM OF 8" OF ¾"-0" COMPACTED BASE MATERIAL.
4. REINFORCEMENT FOR PRECAST CATCH BASIN SHALL BE REBAR MEETING ASTM A-615 GRADE 60 OR WELDED WIRE MEETING ASTM A-497.
5. ALL POURED INPLACE CONCRETE SHALL HAVE A 28 DAY STRENGTH OF 3000 P.S.I. AND A SLUMP OF 2" TO 4".
6. CHANNEL REQUIRED IN FLOW THROUGH APPLICATIONS, AS APPROVED. ALL OTHER APPLICATIONS REQUIRE AN 18" SUMP BELOW LOWEST PIPE INVERT.

GUTTER & CURB INLET CATCH BASIN (CG-2)

DRAWING NO. 225

REVISED 02-03

Clean Water Services
Our commitment is clear.

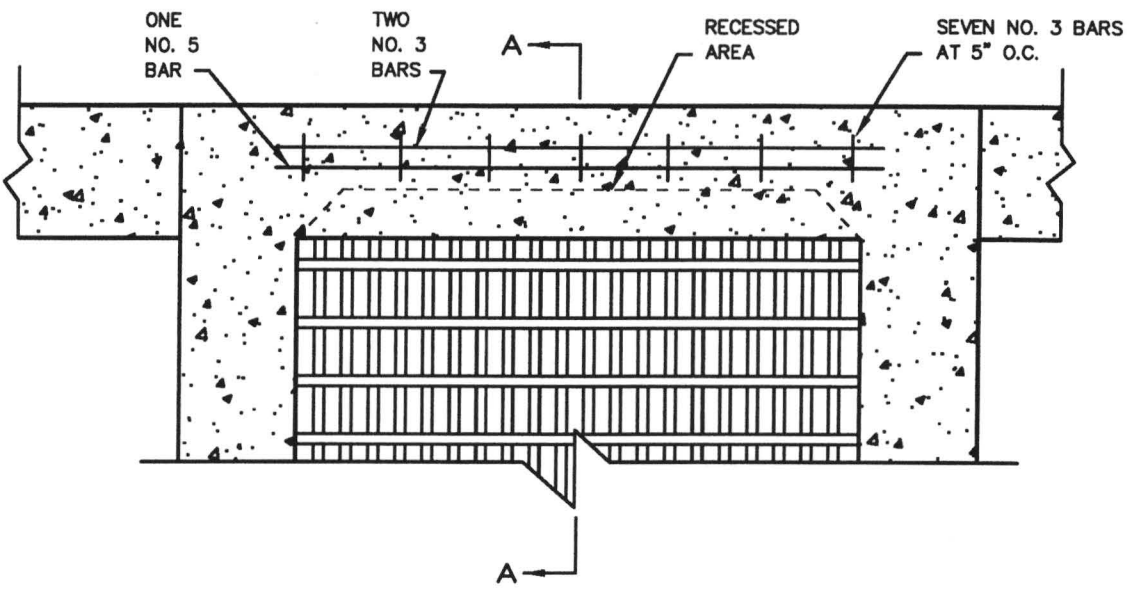

PLAN

SEE STD DRAWING NO. 255
FOR FRAME AND COVER.

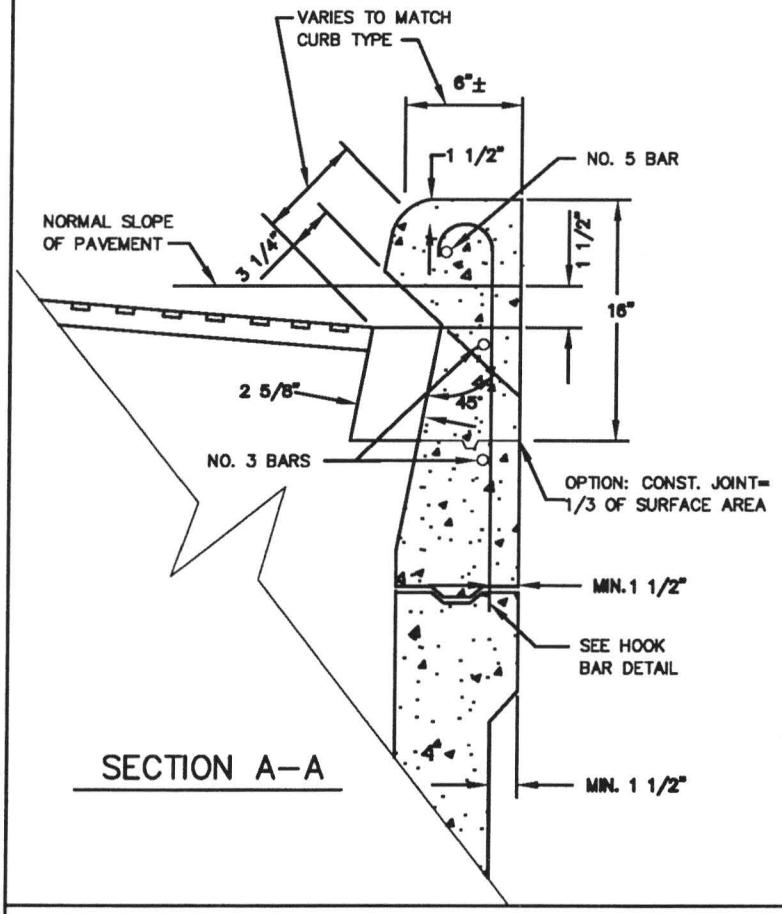

SECTION A–A

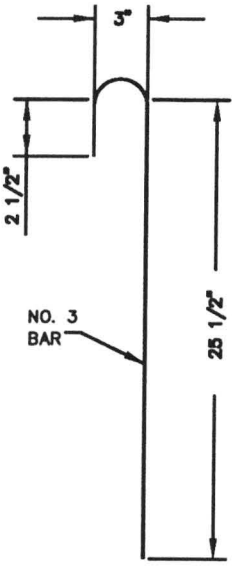

HOOK BAR
DETAIL

GUTTER & CURB INLET CATCH BASIN (CG–2) REINFORCEMENT

DRAWING NO.226

REVISED 02–03

Clean Water Services
Our commitment is clear.

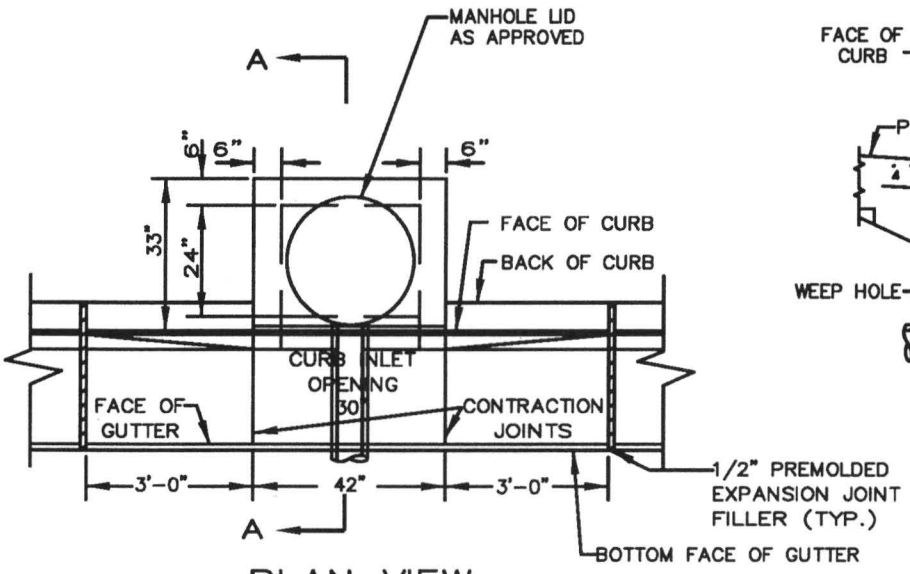

PLAN VIEW

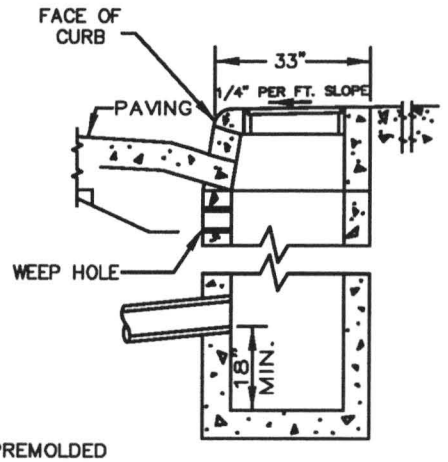

SECTION A–A

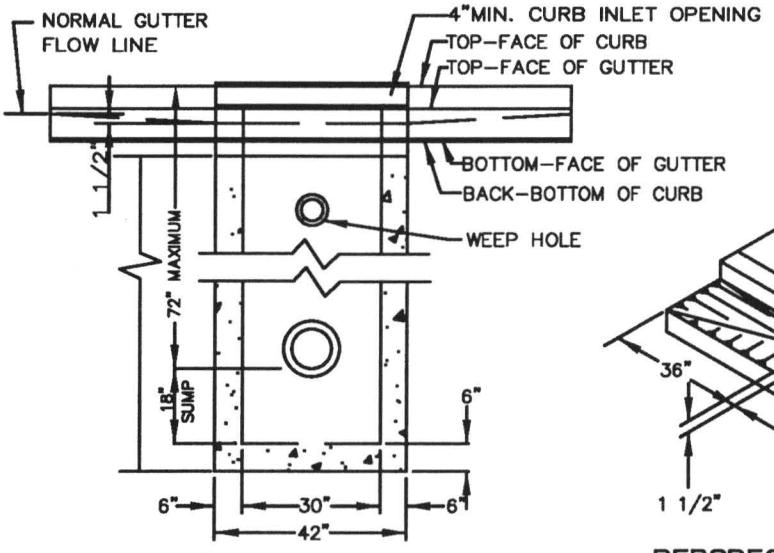

FRONT VIEW

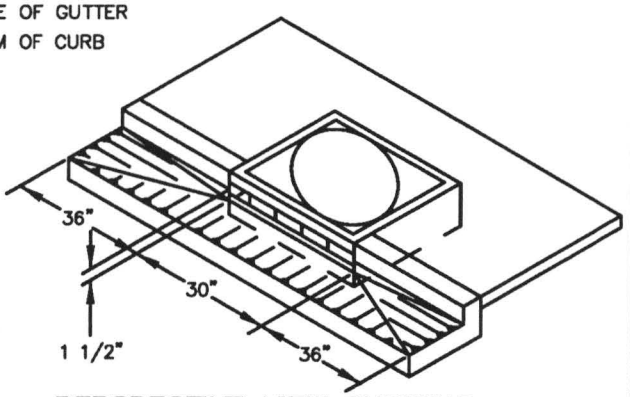

PERSPECTIVE VIEW SHOWING
DEPRESSED GUTTER AT CURB INLET

NOTES:
1. ALL FABRICATED METAL PARTS SHALL BE NEW STRUCTURAL, ASTM A–36 STEEL, AND BE HOT–DIPPED GALVANIZED AFTER FABRICATION.
2. ALL POURED IN PLACE CONCRETE SHALL HAVE A 28 DAY STRENGTH OF 3000 P.S.I. AND A SLUMP OF 2" TO 4".
3. PRECAST CURB INLET IS PATTERNED AFTER WALT'S CONCRETE SPRINGFIELD, OR. CONCRETE CURB INLET PAT. NO. 4000953.
4. INSTALL STEPS WHEN DISTANCE FROM TOP OF LID TO FLOWLINE OF PIPE IS GREATER THAN 48" INCHES, SEE STD. DRAWING NO. 100. SET FIRST STEP 12" FROM TOP OF GRATE.
5. INSTALL STRUCTURE ON MINIMUM OF 8" OF ¾" TO 0" COMPACTED BASE MATERIAL.

INLET
CATCH BASIN (CG–30)

DRAWING NO. 230

REVISED 02–03

Clean Water Services
Our commitment is clear.

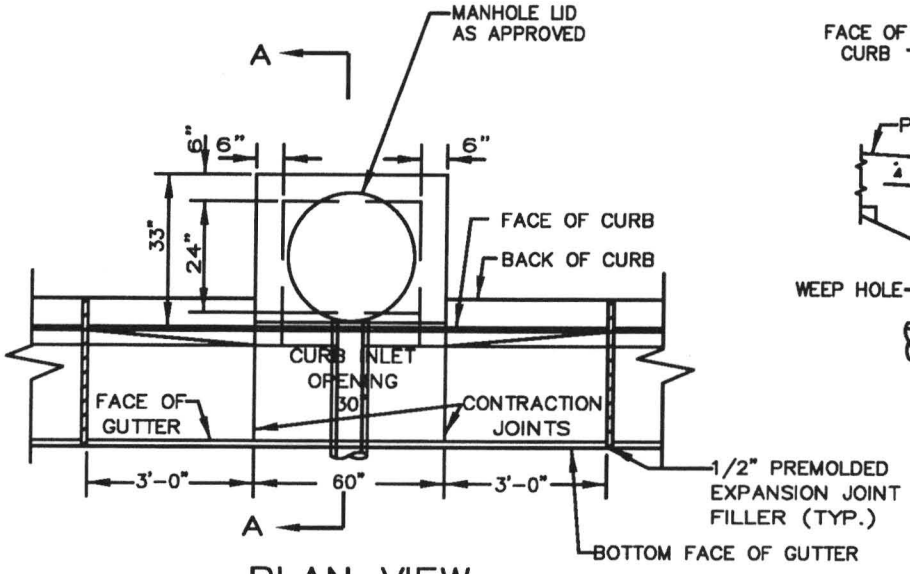

PLAN VIEW

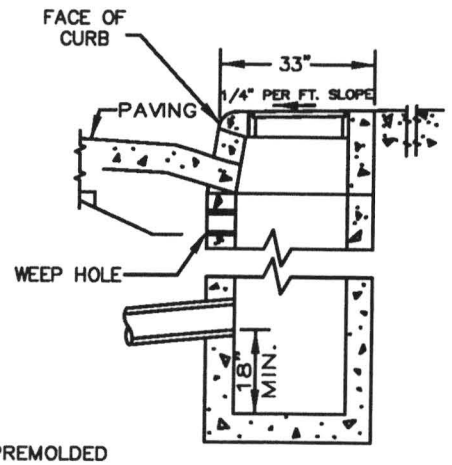

SECTION A–A

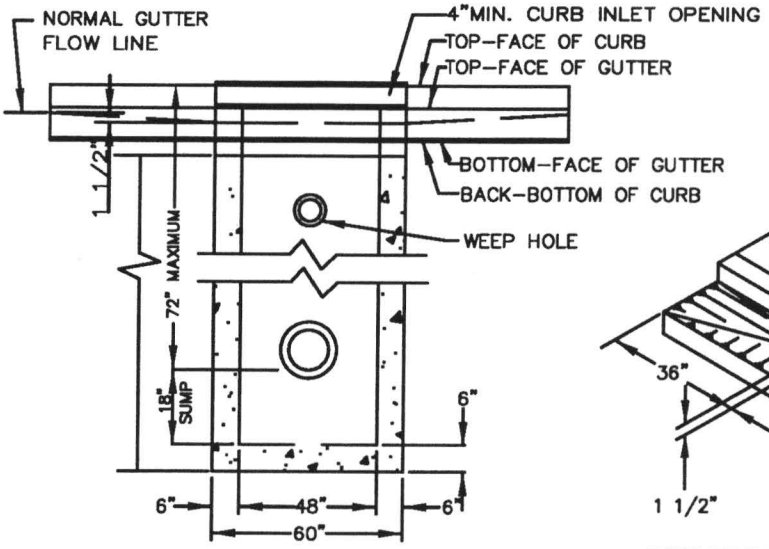

FRONT VIEW

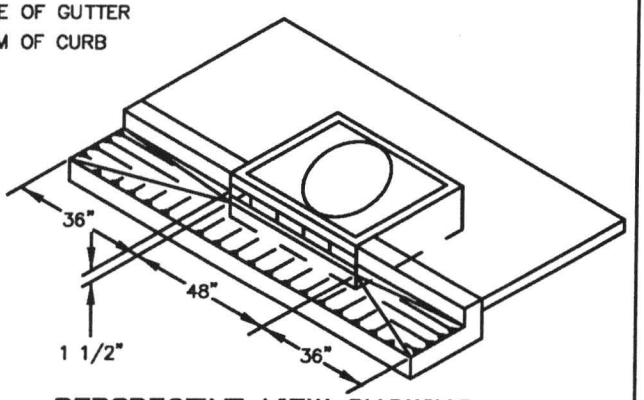

PERSPECTIVE VIEW SHOWING
DEPRESSED GUTTER AT CURB INLET

NOTES:

1. ALL FABRICATED METAL PARTS SHALL BE NEW STRUCTURAL, ASTM A–36 STEEL, AND BE HOT–DIPPED GALVANIZED AFTER FABRICATION.
2. ALL POURED IN PLACE CONCRETE SHALL HAVE A 28 DAY STRENGTH OF 3000 P.S.I. AND A SLUMP OF 2" TO 4".
3. PRECAST CURB INLET IS PATTERNED AFTER WALT'S CONCRETE SPRINGFIELD, OR. CONCRETE CURB INLET PAT. NO. 4000953.
4. INSTALL STEPS WHEN DISTANCE FROM TOP OF LID TO FLOWLINE OF PIPE IS GREATER THAN 48" INCHES, SEE STD. DRAWING NO. 100. SET FIRST STEP 12" FROM TOP OF GRATE. AND ALIGN WITH LID OPENING.
5. INSTALL STRUCTURE ON MINIMUM OF 8" OF ¾" TO 0" COMPACTED BASE MATERIAL.

INLET
CATCH BASIN (CG–48)

DRAWING NO. 240

REVISED 02–03

Clean Water Services
Our commitment is clear.

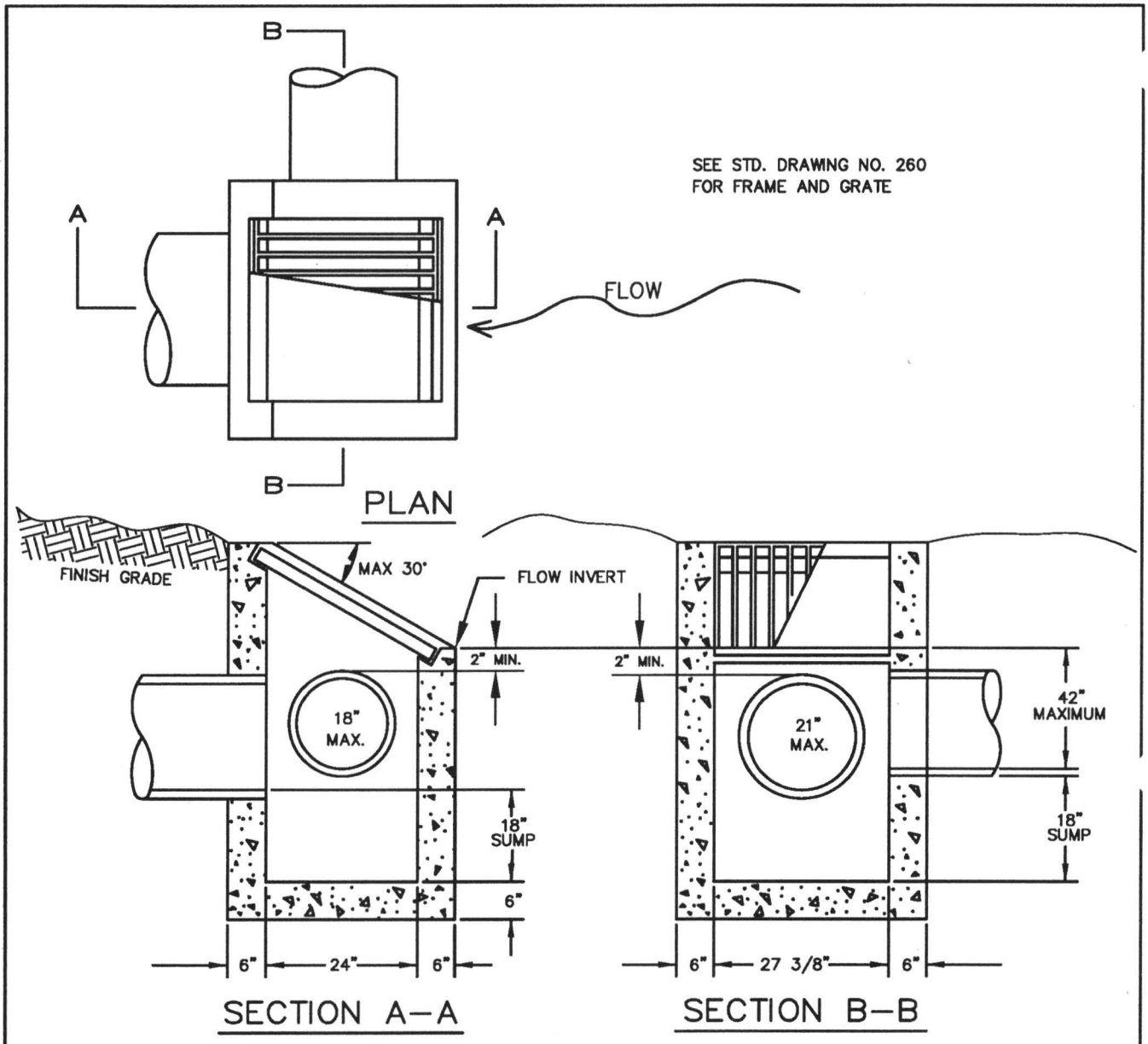

NOTES:
1. ALL PRE–CAST SECTIONS SHALL CONFORM TO REQUIREMENTS OF ASTM C–478.
2. INSTALL STRUCTURE ON MINIMUM OF 8" OF 3/4" – 0" COMPACTED BASE MATERIAL.
3. PRECAST REINFORCEMENT SHALL BE REBAR MEETING ASTM A615 GRADE 60 OR WELDED WIRE MEETING ASTM A497
4. ALL POURED IN PLACE CONCRETE SHALL HAVE A 28 DAY STRENGTH OF 3000 PSI AND SLUMP OF 2"TO 4".

DITCH INLET

DRAWING NO. 250

REVISED 02–03

Clean Water Services
Our commitment is clear.

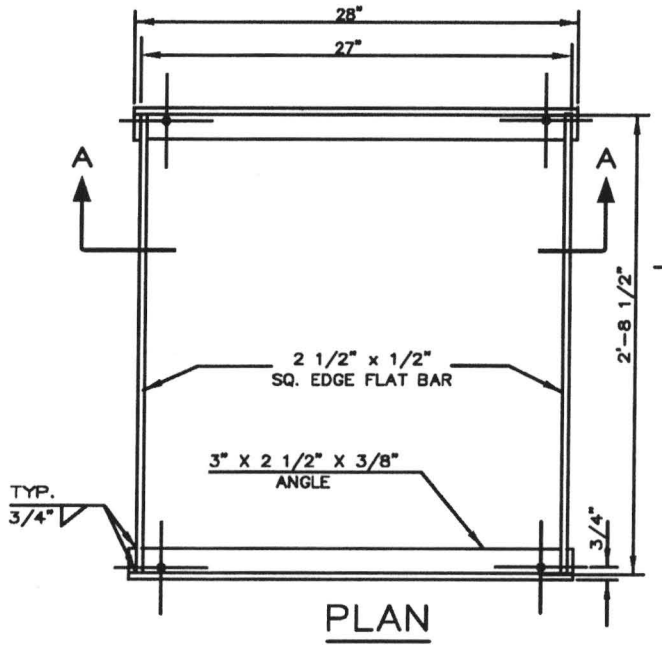

PLAN

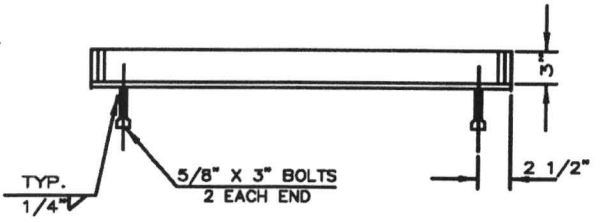

SECTION A–A

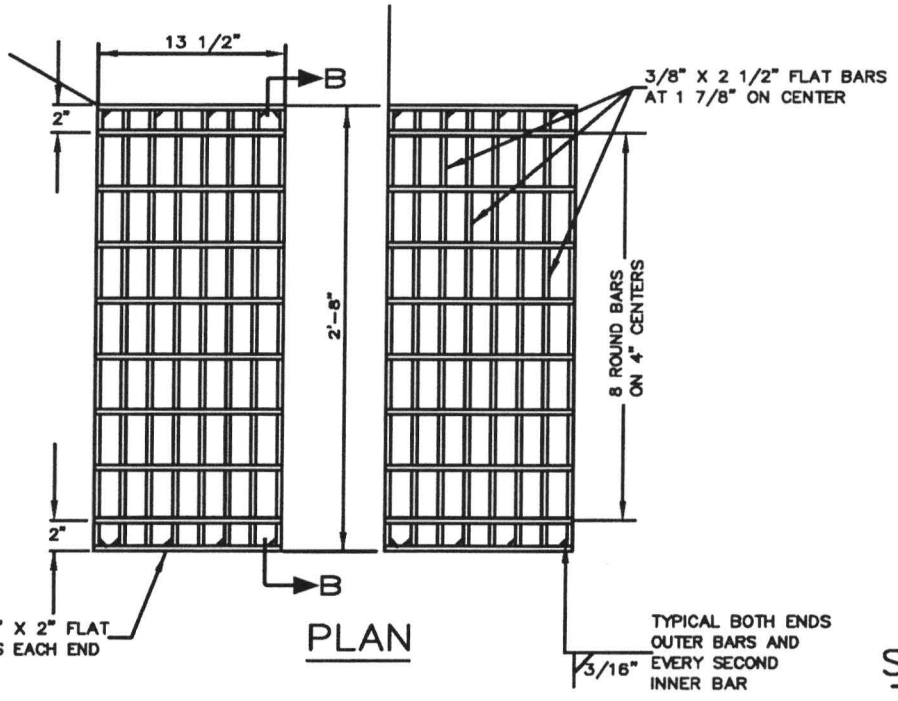

PLAN

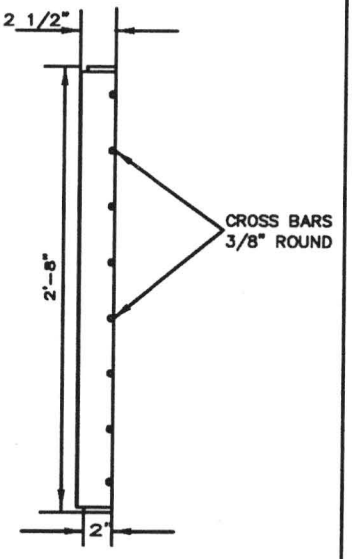

SECTION B–B

NOTE:
FRAME AND GRATE TO BE NEW STRUCTURAL ASTM A–36 FLAT BAR STEEL OR APPROVED EQUAL.
ADDITIONAL THICKNESS AND REINFORCEMENT SHALL BE REQUIRED FOR STATE HIGHWAY APPLICATIONS.

CATCH BASIN
FRAME AND GRATE (L–G2)

DRAWING NO. 255

REVISED 02–03

Clean Water Services
Our commitment is clear.

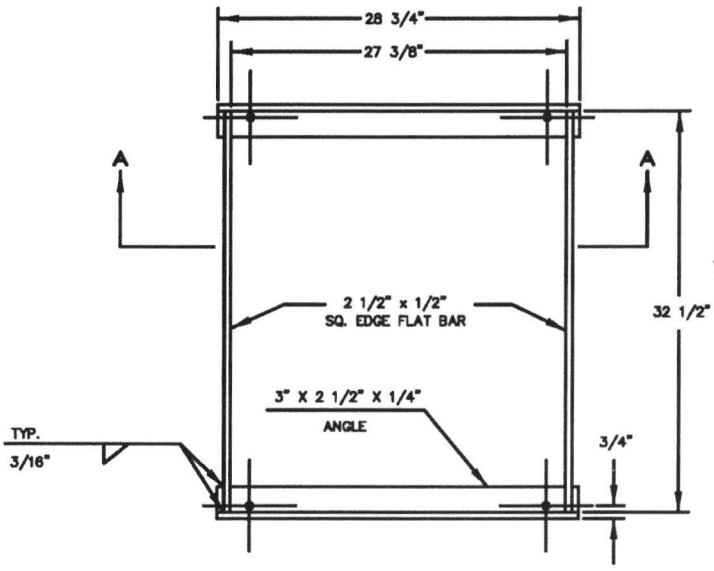

PLAN

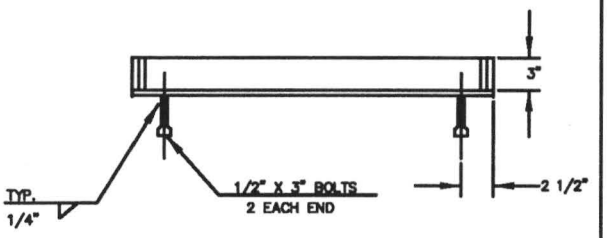

SECTION A–A

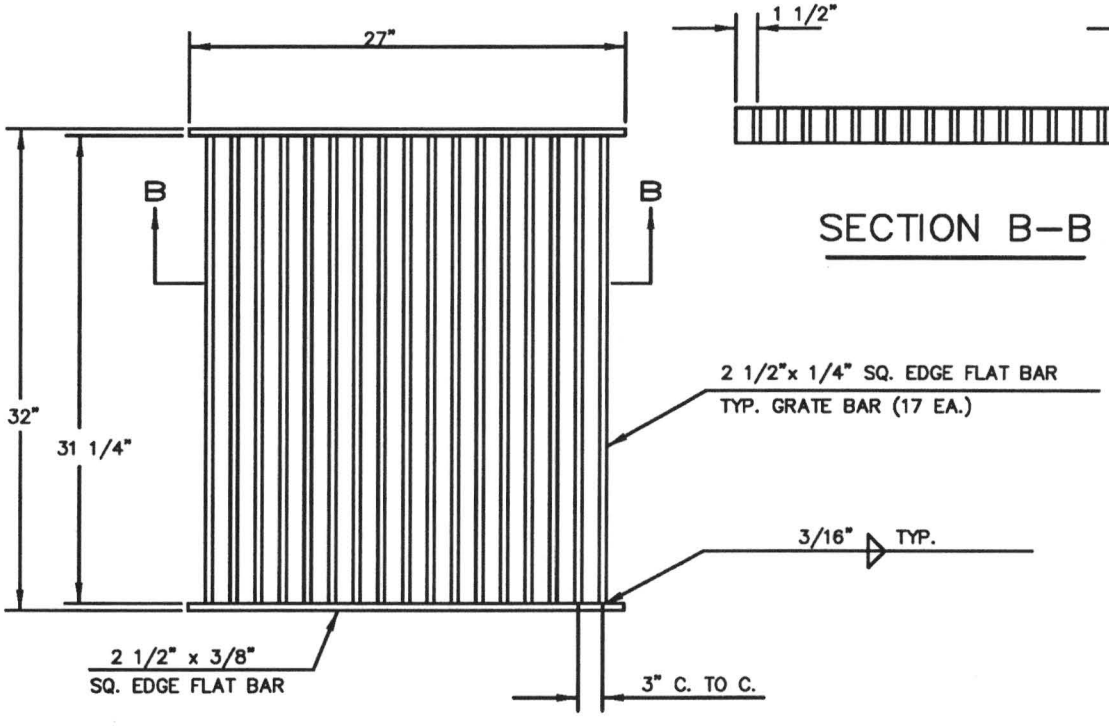

PLAN

SECTION B–B

NOTE:
FRAME AND GRATE SHALL BE NEW STRUCTURAL ASTM A–36 FLAT BAR STEEL OR APPROVED EQUAL.

DITCH INLET FRAME AND GRATE

DRAWING NO. 260

REVISED 02–03

Clean Water Services
Our commitment is clear.

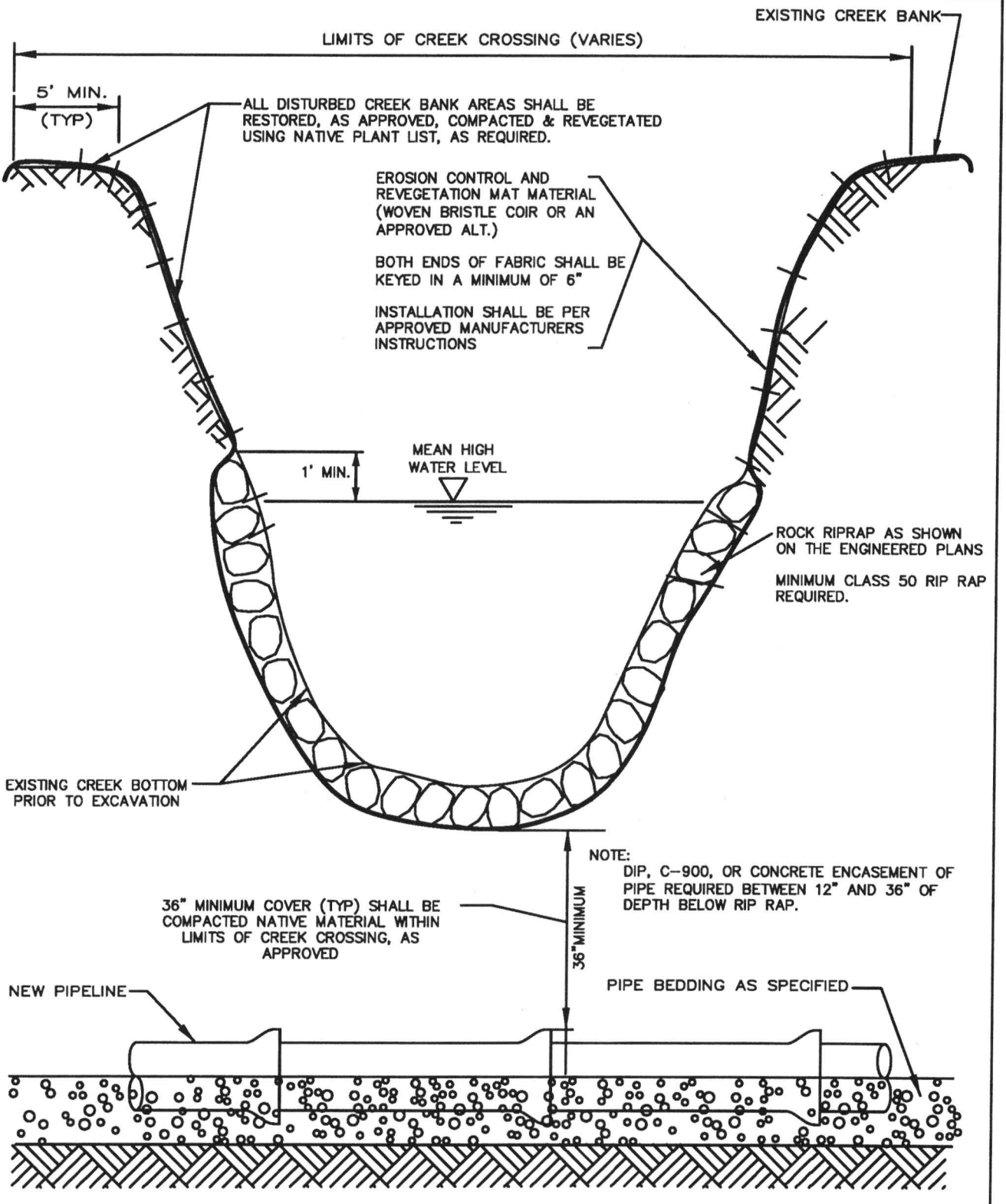

CREEK CROSSING RESTORATION

DRAWING NO. 270

REVISED 02-03

Clean Water Services
Our commitment is clear.

CLASS "B" CLASS "A"

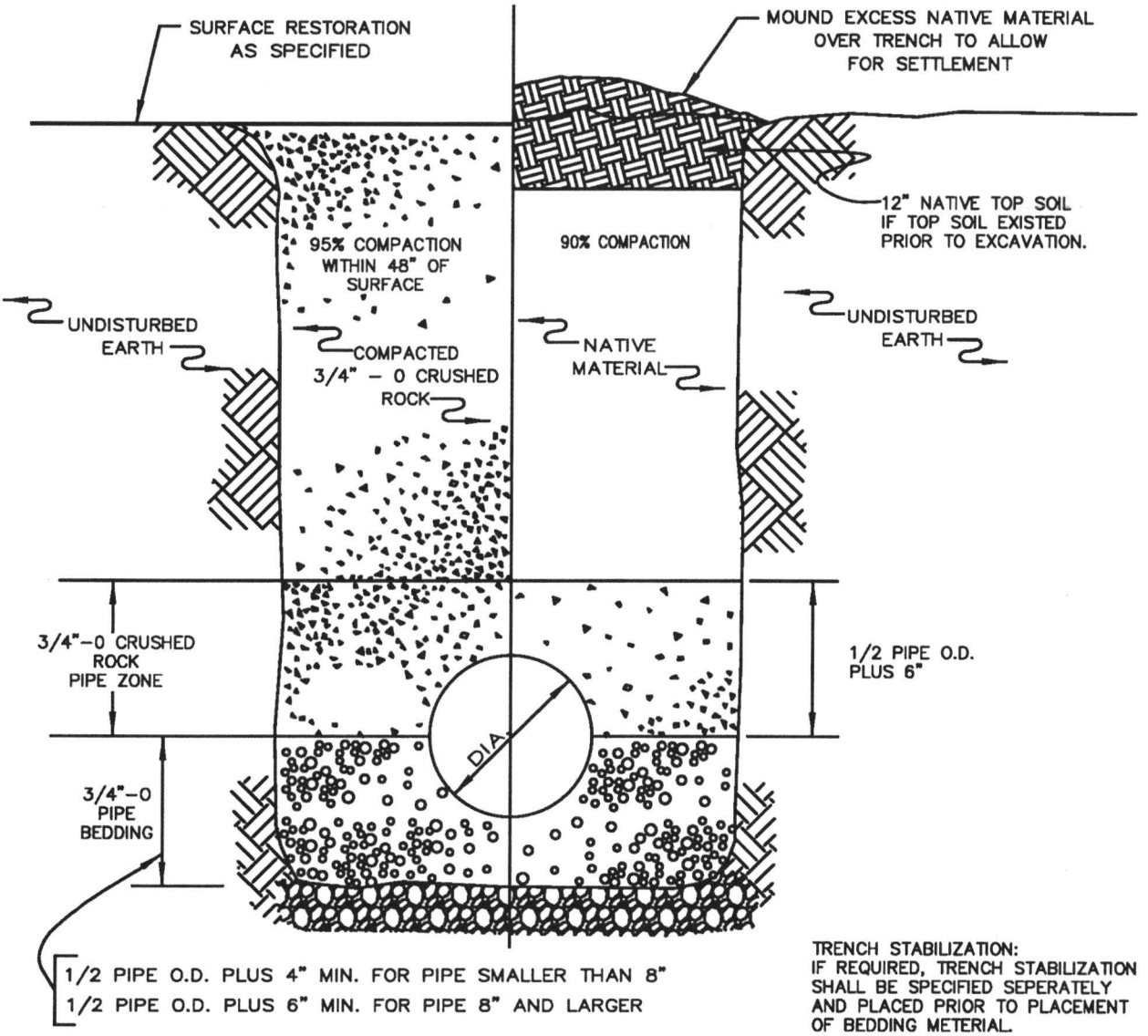

TRENCH STABILIZATION:
IF REQUIRED, TRENCH STABILIZATION SHALL BE SPECIFIED SEPERATELY AND PLACED PRIOR TO PLACEMENT OF BEDDING METERIAL.

TRENCH BACKFILL DETAILS

DRAWING NO. 280

REVISED 02-03

Clean Water Services
Our commitment is clear.

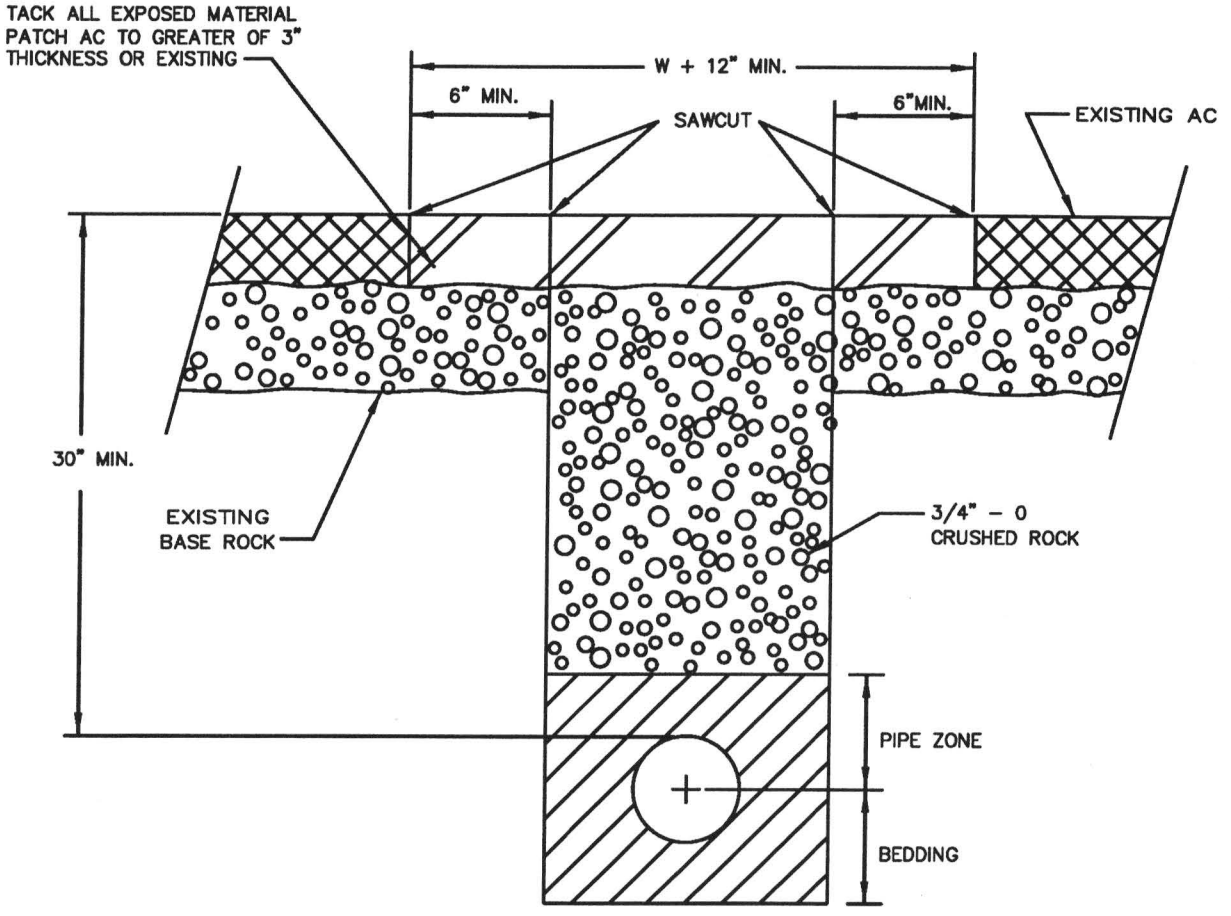

NOTE:
1. TEE CUT TO BE DONE AFTER EXCAVATION AND BACKFILL OF TRENCH.
2. SEE STD. DRAWING NO. 280 FOR BEDDING, PIPE ZONE, AND TRENCH BACKFILL.

T–CUT
ASPHALT DETAILS

DRAWING NO. 285

REVISED 02–03

Clean Water Services
Our commitment is clear.

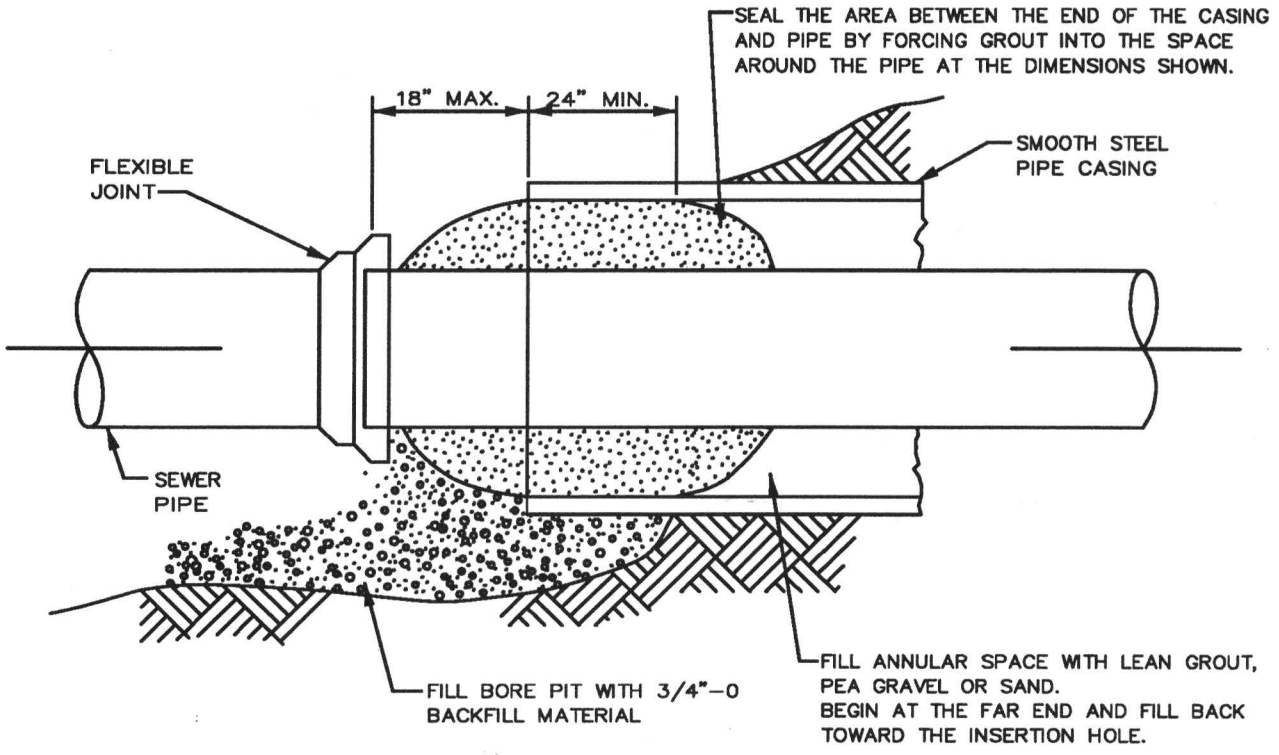

PIPE SEAL DETAIL

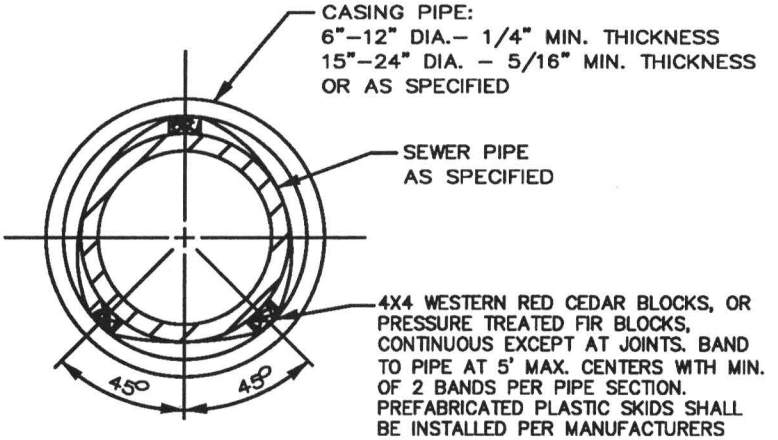

CASING SECTION

BORE DETAIL

DRAWING NO. 370

REVISED 02-03

Clean Water Services
Our commitment is clear.

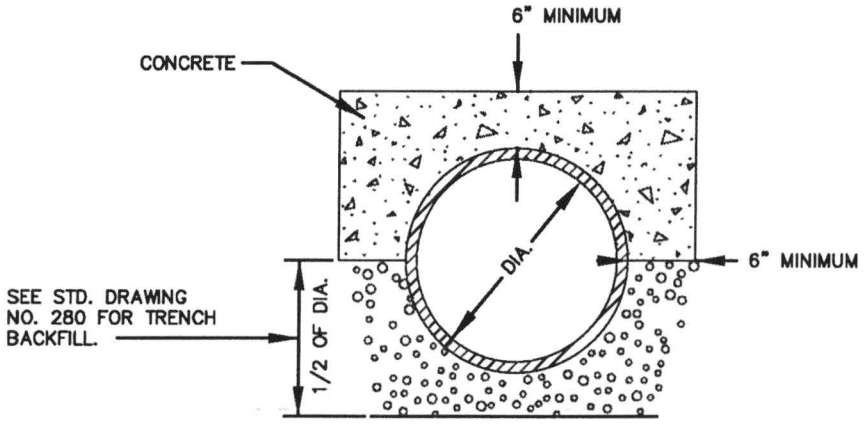

END VIEW

NOTE:
CONCRETE SHALL HAVE A 28 DAY STRENGTH OF 3000 PSI AND 2" TO 4" SLUMP.

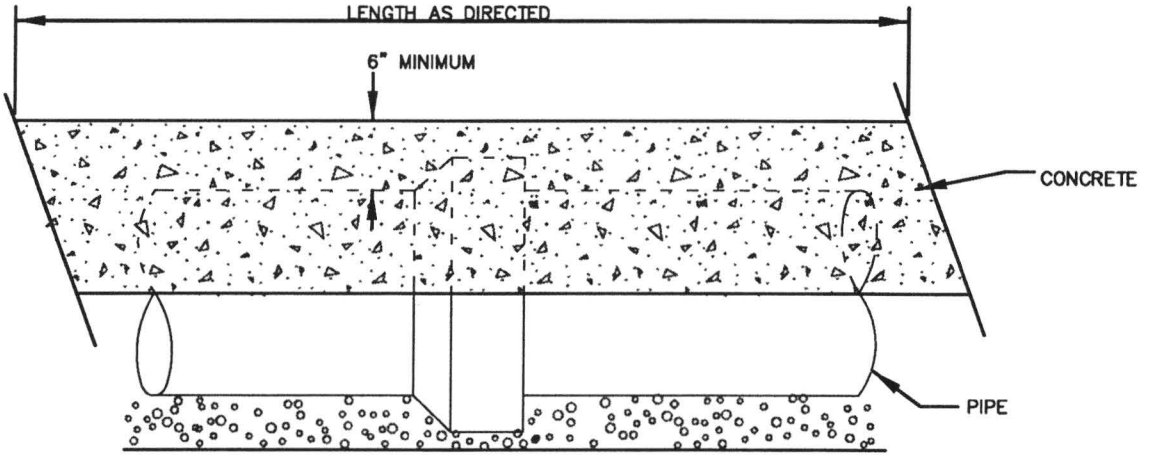

SIDE VIEW

CONCRETE CAP

DRAWING NO. 371

REVISED 02-03

Clean Water Services
Our commitment is clear.

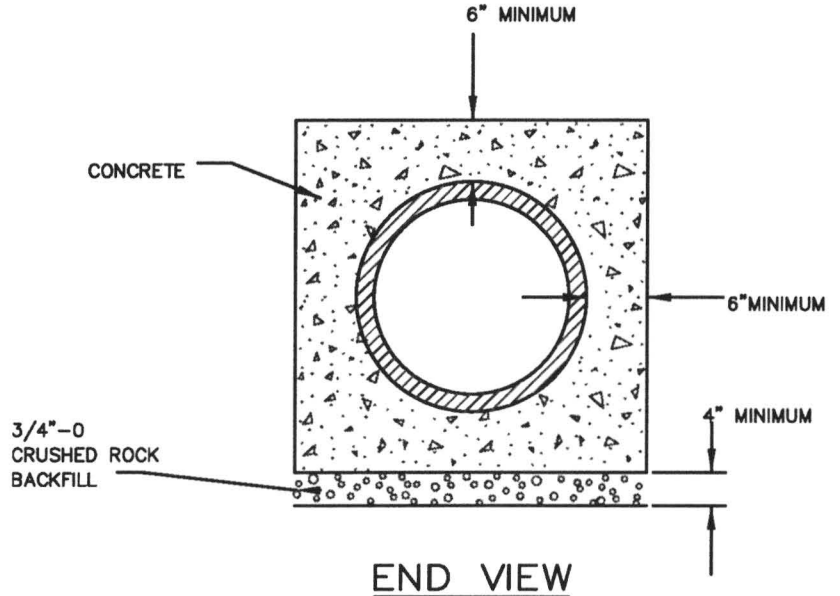

END VIEW

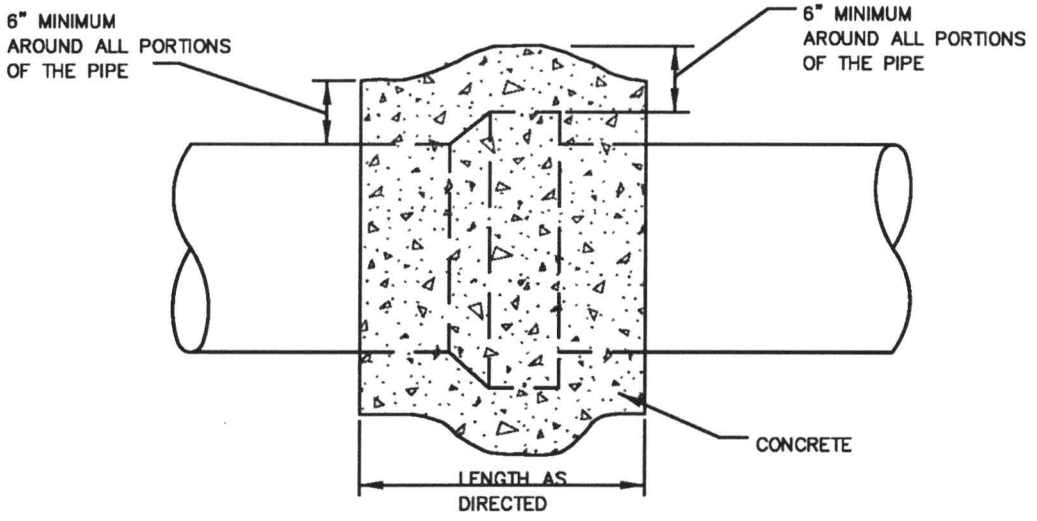

SIDE VIEW

NOTE:
CONCRETE SHALL HAVE A
28 DAY STREGTH OF 3000 PSI
AND, 2" TO 4" SLUMP.

CONCRETE ENCASEMENT/ CLOSURE COLLAR

DRAWING NO. 372

REVISED 02-03

Clean Water Services
Our commitment is clear.

NOTE:
1. CONCRETE ANCHORS TO BE INSTALLED IMMEDIATELY DOWNHILL OF PIPEBELL.
2. CONCRETE SHALL HAVE A 28 DAY STRENGTH OF 3000 PSI, AND 2" TO 4" SLUMP.

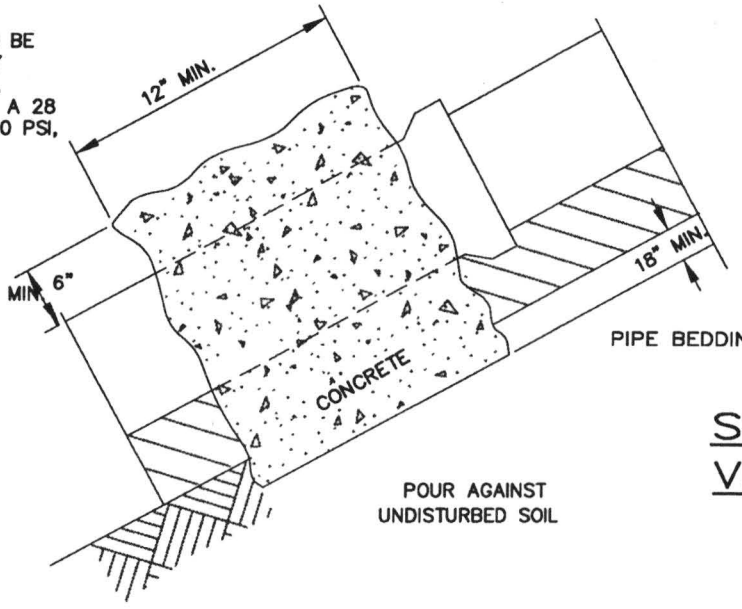

SIDE VIEW

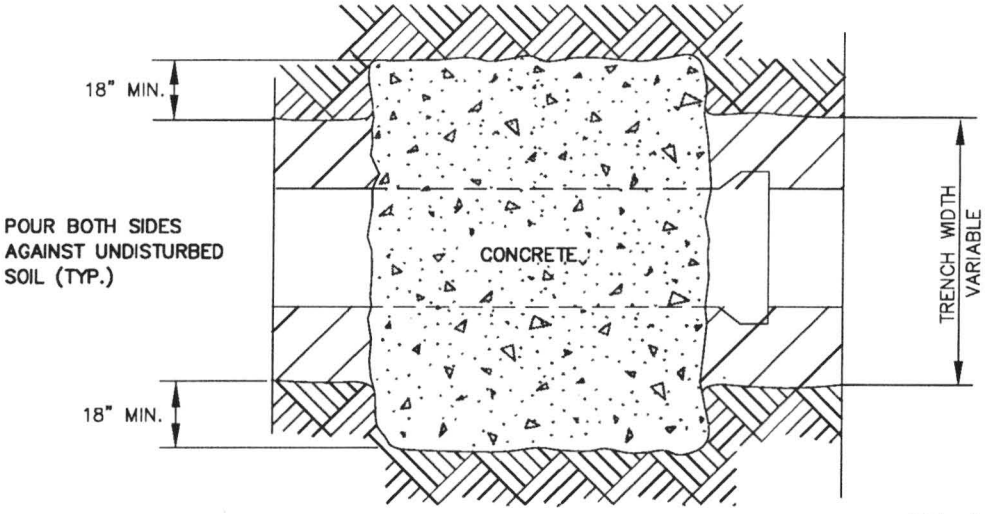

PLAN

SLOPE	MIN. ANCHOR SPACING CENTER TO CENTER
20% – 34%	35'
35% – 50%	25'
51% +	15' OR CONC. ENCASEMENT

ODOT "METAL PIPE SLOPE ANCHORS" DWG # RD 330 IS ACCEPTABLE ALTERNATIVE

ANCHOR WALL

DRAWING NO. 373

REVISED 02-03

Clean Water Services
Our commitment is clear.

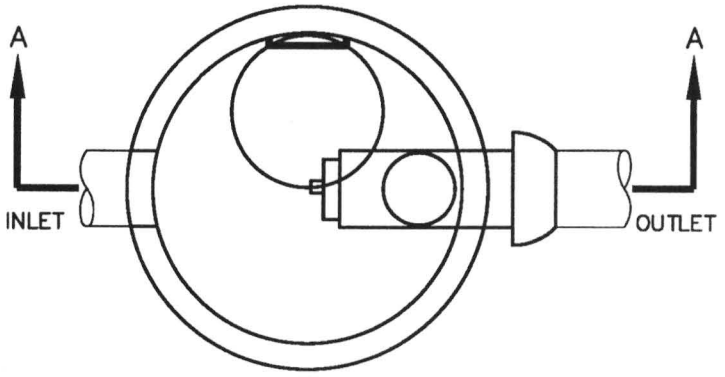

PLAN

NOTES:
1. ALL MANHOLE SECTIONS SHALL CONFORM TO THE REQUIREMENTS OF ASTM C-478 AND APPLICABLE PROVISIONS OF STD. MANHOLE DRAWING NO. 010
2. INLET AND OUTLET PIPE NOT TO EXCEED 18"DIA.
3. PROVIDE SPECIAL DETAIL FOR OUTLET FLOW CONTROL EXCEEDING 18" DIA.

SUMP VOLUME AVAILABLE

	MINIMUM	MAXIMUM
60" M.H.=	58.9 CF	98.1 CF
72" M.H.=	84.8 CF	141.3 CF
84" M.H.=	115.4 CF	192.3 CF

PROVIDE SPECIAL DETAIL FOR VOLUME REQUIREMENTS EXCEEDING 192.3 CF

SUMP VOLUME REQUIREMENTS

20 CF/1.0 CFS OF INFLOW

58.9 CF MINIMUM REQUIRED

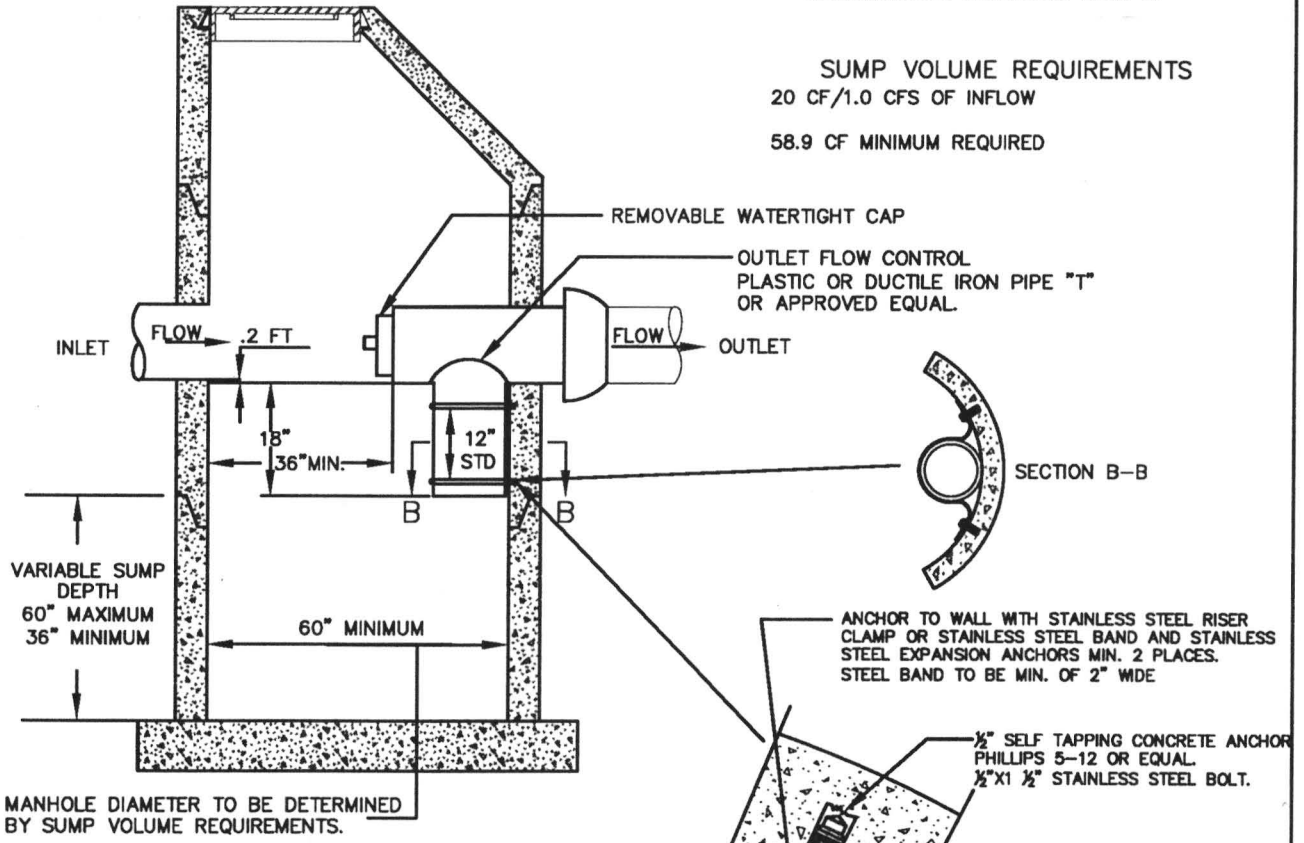

SECTION A-A

CLAMP DETAIL
(SECTION A-A)
N.T.S.

WATER QUALITY MANHOLE

DRAWING NO. 515

REVISED 09-03

Clean Water Services
Our commitment is clear.

WATER QUALITY SWALE

DRAWING NO. 520

REVISED 12-03

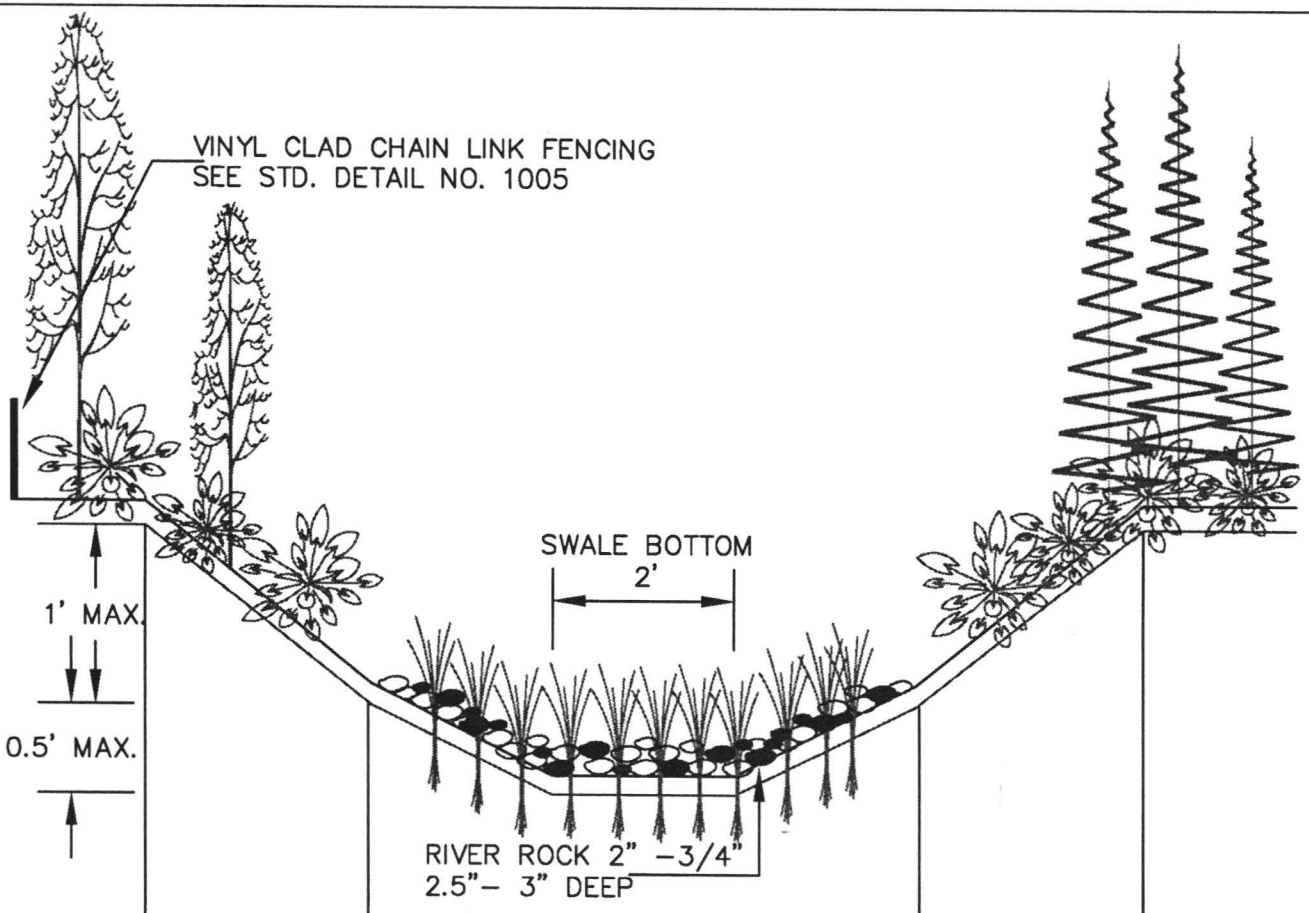

SWALE AREA	FREEBOARD AREA	TREATMENT AREA 6' MINIMUM WIDTH	FREEBOARD AREA	BUFFER/MITIGATION AREA
EC MATTING	ECONOJUTE*	COCONUT FIBER OR GEOJUTE PLUS*	ECONOJUTE*	ECONOJUTE* (S> 20%)
SEED MIX	LOW GROW MIX	WET/MOIST MIX	LOWGROW MIX	UPLAND MIX
MAX. SLOPE	2.5:1	4:1	2.5:1	NA

* OR AS APPROVED

NOTES:

1. REFER TO APPENDIX D, CWS DESIGN & CONSTRUCTION STANDARDS, FOR LANDSCAPING REQUIREMENTS INCLUDING TREE PLACEMENT, TOPSOIL AND PLANTING SPECIFICATIONS.
2. PROVIDE IRRIGATION AS APPROVED BY CWS.
3. JUTE MATTING- GEOJUTE PLUS IN TREATMENT AREA, ECONOJUTE FOR ALL OTHER AREAS, OR SIMILIAR FABRICS. COCONUT FIBER IS ALSO ACCEPTABLE.
4. 12-INCHES OF TOPSOIL SHALL BE PLACED THROUGHOUT THE WATER QUALITY TRACT.

Clean Water Services
Our commitment is clear.

CONSTRUCTION

1. Water Quality Swale shall be over-excavated and filled to final grade with 12-inch amended topsoil. Topsoil amendments shall be garden compost, not conventional fertilizer amendments.
2. A biodegradable Erosion Control Matting shall be placed over the topsoil throughout the swale cross section, fabric shall be held in place in accordance with the manufacturer's installation requirements. Anchor spacing shall be based on 3 fps flow over the fabric.
    a. Treatment area - high-density jute matting (Geojute Plus or other approved equal)
    b. All other areas - low-density jute matting (Econojute or other approved equal)
3. 2.5-3 inches of 2"-$\frac{3}{4}$" river run rock shall be placed over the matting evenly throughout the length and width of the swale.
4. Plant materials shall be placed in accordance with the plan and plant table as shown on approved plans.
5. The water quality swale treatment area plantings can be deemed "substantially complete" once active green growth has occurred to an average growth of 3" and plant density is an average of approx. 6 plants (minimum 1-inch plugs or equivalent) per square foot.
6. The facility shall be deemed acceptable to begin the maintenance period when plant growth and density matches the engineer's design as shown on the approved plans and all other requirements have been met. The engineer must certify the facility to be functional, in accordance with the approved plan design to begin the two-year maintenance period.

MAINTENANCE

1. The permittee is responsible for the maintenance of this facility for a minimum of two years following construction and acceptance of this facility per Chapter 2.
2. Irrigation is to be provided per separate irrigation plan as approved.
   Note: Irrigation needs are to be met using a temporary irrigation system with a timer during the dry season. Systems should be winterized during the wet season to assure longevity and guard against damage from freezing temperatures. Water source shall be as shown on the approved plans.
3. Engineer or Owners Representative is to visit and evaluate the site a minimum of twice annually (Spring and Fall). The landscaping shall be evaluated and replanted as necessary to ensure a minimum of 80% survival rate of the required vegetation and 90% aerial coverage. Non-native, invasive plant species shall be removed when occupying more than 20% of the site.
4. The facility shall be re-excavated and planted if siltation greater than 3 inches in depth occurs within the two-year maintenance period.

WATER QUALITY SWALE CONSTRUCTION & MAINTENANCE NOTES

DETAIL NO. 530

REVISED 12-03

Clean Water Services
Our commitment is clear.

SEE STD. DRAWING NO. 200
FOR TOP SECTION DETAILS

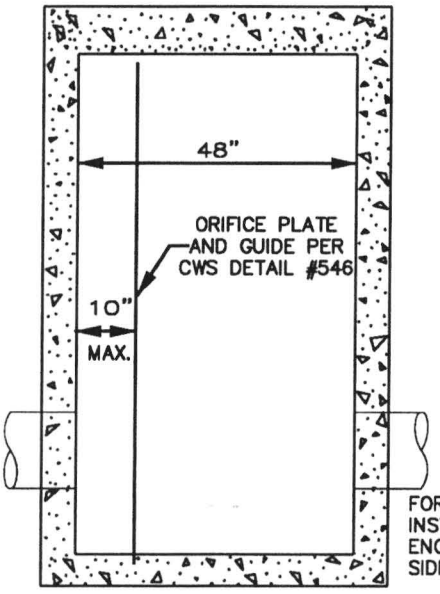

SECTION B–B

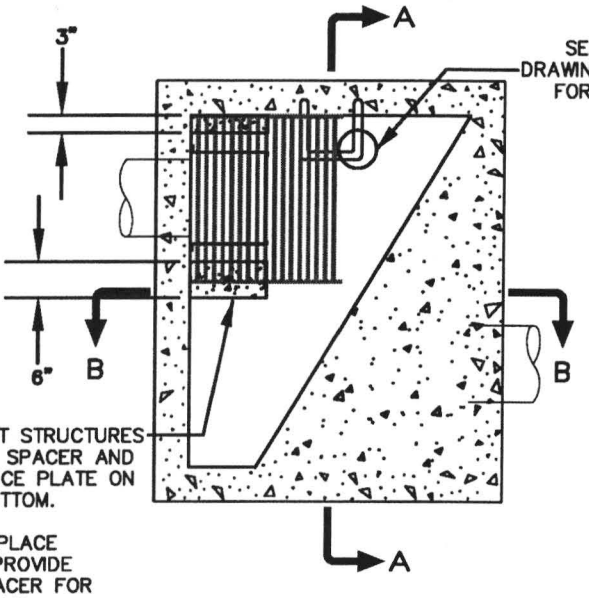

FOR PRE–CAST STRUCTURES INSTALL HDPE SPACER AND ENCLOSE ORIFICE PLATE ON SIDES AND BOTTOM.

FOR CAST IN PLACE STRUCTURES PROVIDE CONCRETE SPACER FOR MOUNTING FRAME.

PLAN VIEW

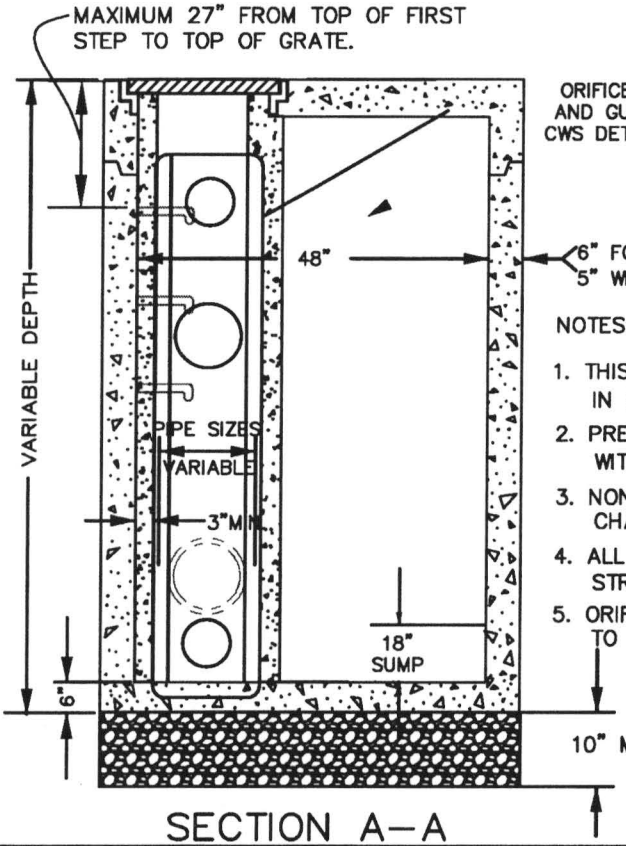

SECTION A–A

NOTES:

1. THIS IS AN ALTERNATE DESIGN FOR THE SECONDARY STRUCTURE IN OUTFLOW CONTROL STRUCTURE– CWS DETAIL #545
2. PRECAST CATCH BASIN SHALL BE CONSTRUCTED IN ACCORDANCE WITH ASTM C–478.
3. NON–SUMP INLET MANHOLE SHALL BE CHANNELED.
4. ALL POURED IN PLACE CONCRETE SHALL HAVE A 28 DAY STRENGTH OF 3000 PSI. AND A SUMP OF 2" TO 4"
5. ORIFICE I.E. TO BE SHOWN ON PLAN SET. ORIFICE DESIGN TO BE OUTLINED IN DRAINAGE REPORT.

ALTERNATIVE OUTFLOW CONTROL STRUCTURE (MODIFIED CG–48 M.H.)

DRAWING NO. 544

Clean Water Services
Our commitment is clear.

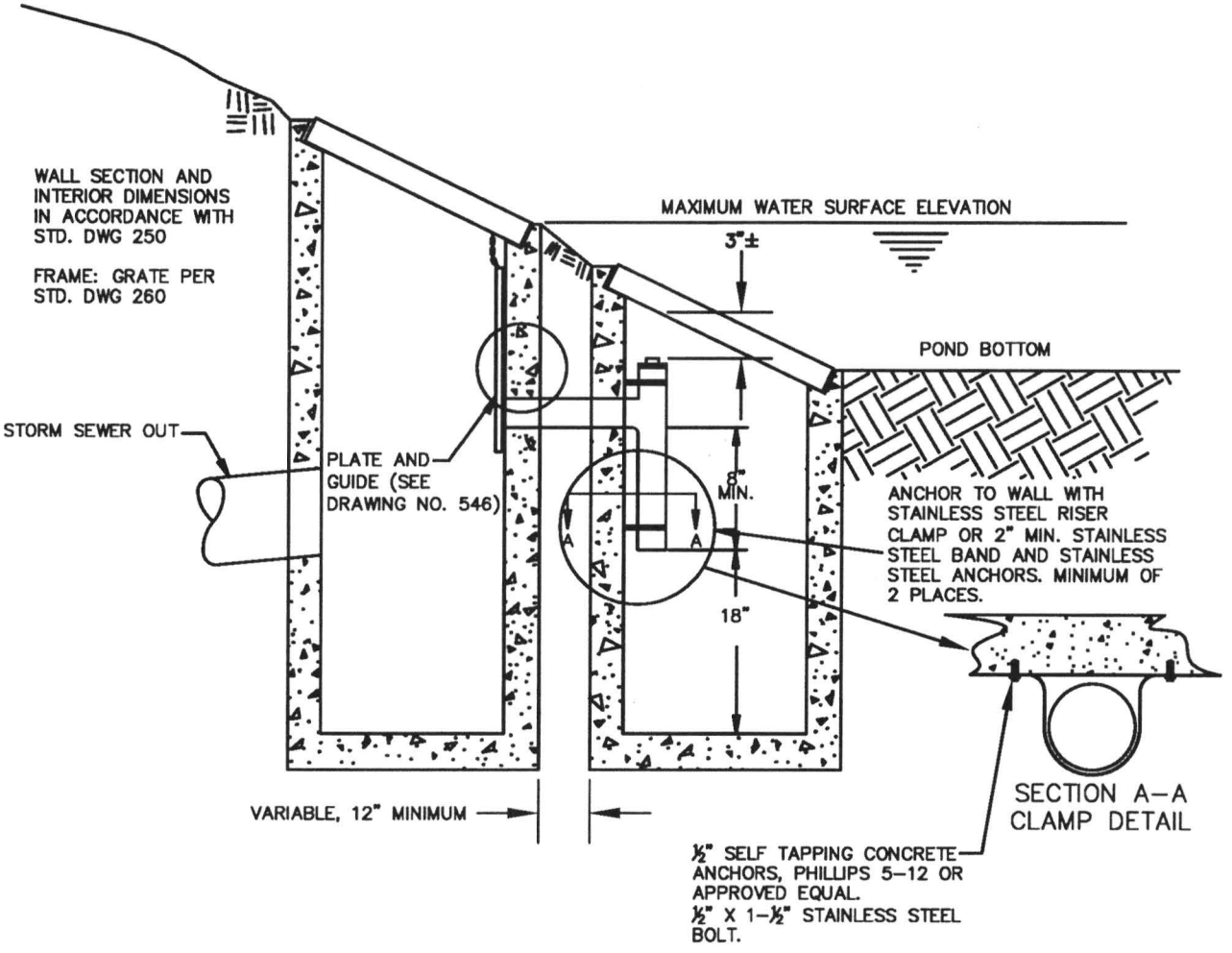

NOTES:

1. CONNECTING PIPE AND TEE SHALL BE 4", 6", OR 8" AWWA C–900 OR ASTM 3034 PVC, AND ONE SIZE LARGER THAN THE ORIFICE OPENING.
2. MAXIMUM ORIFICE OPENING SHALL BE 6" DIAMETER.
3. STRUCTURES SHALL CONFORM TO STANDARD DRAWING NO. 259 DITCH INLET.
4. FRAME AND GRATE SHALL CONFORM TO STANDARD DRAWING NO. 260, DITCH INLET FRAME AND GRATE.
5. PLATE AND GUIDE SHALL BE SECURED FLUSH AGAINST WALL OF STRUCTURE AS APPROVED.

OUTFLOW CONTROL STRUCTURE

DRAWING NO. 545

REVISED 02–03

Clean Water Services
Our commitment is clear.

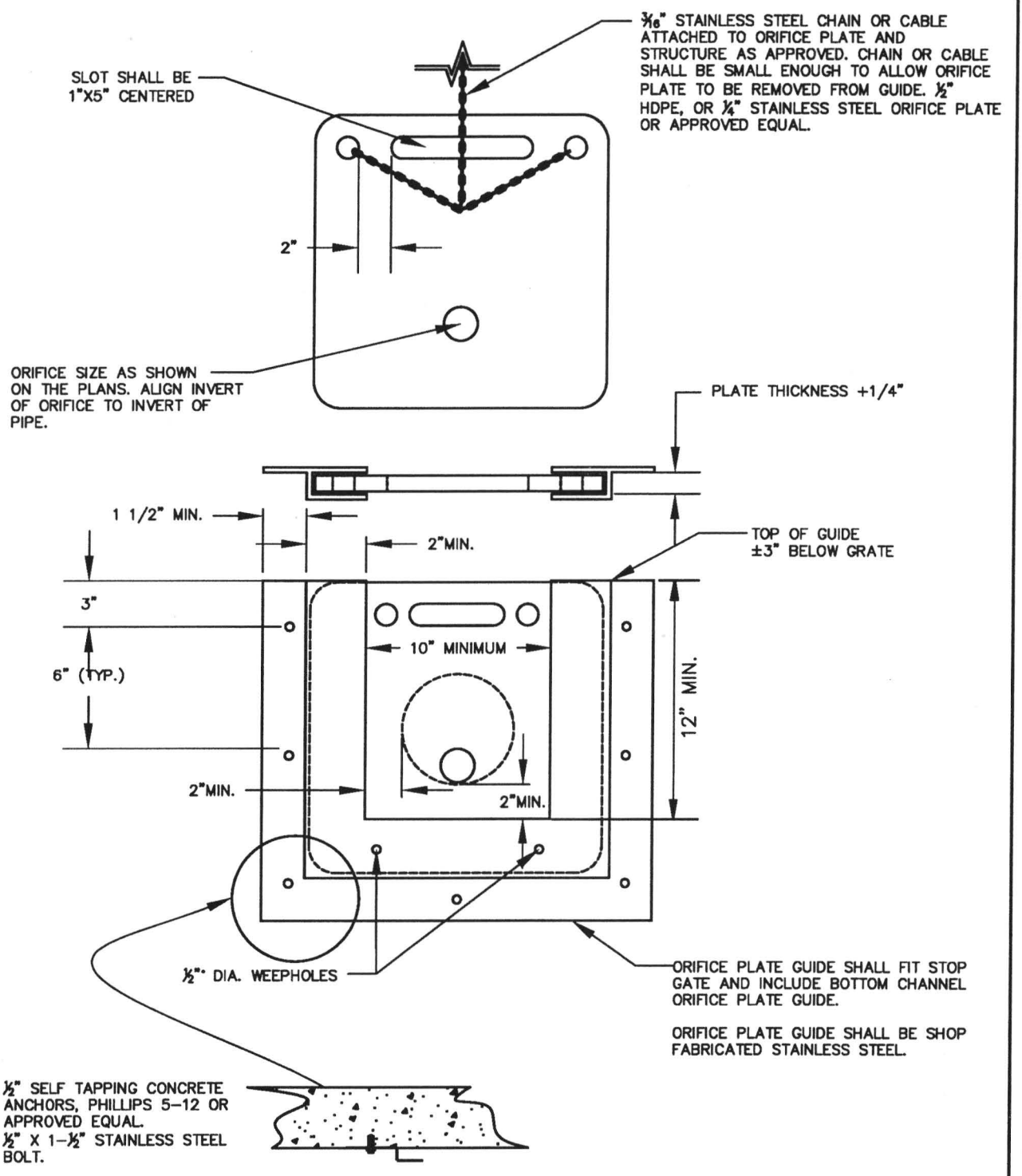

ORIFICE PLATE AND GUIDE

DRAWING NO. 546

REVISED 02-03

Clean Water Services
Our commitment is clear.

NOTES:
1) JUNCTION BOX SHALL BE LOCATED ENTIRELY OUTSIDE THE CONFINES OF THE CLASS 1, DIVISION 1 AREA OF THE WETWELL. WHERE AREAS OF AROUND THE PUMPING STATION ARE LOCATED OUTDOORS; THERE IS FREE MOVEMENT AND UNIMPEDED AIR CIRCULATION. THIS INSTALLATION WILL BE LIMITED TO ONLY PUMPING STATIONS THAT ARE LOCATED BEHIND LOCKED FENCES AND ACCESS IS RESTRICTED TO AUTHORIZED AND QUALIFIED USA PERSONNEL.

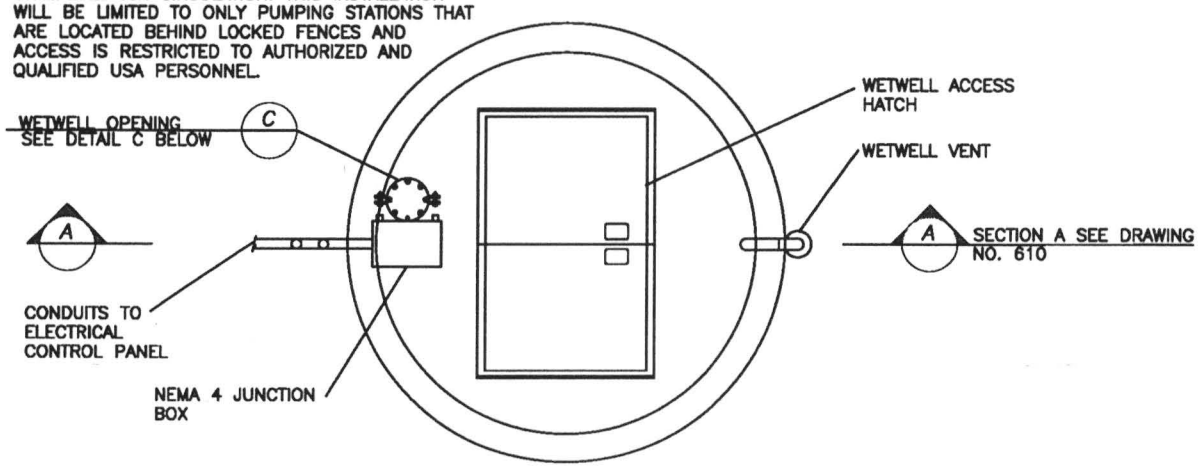

PUMPSTATION PLAN VIEW

NTS

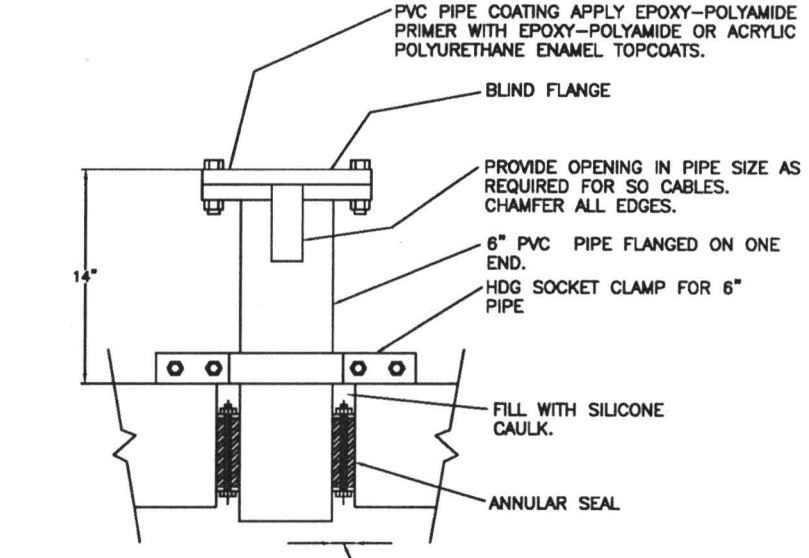

WETWELL OPENING DETAIL C (C)

NTS

FLOAT SWITCH PLAN AND DETAIL C

DRAWING NO. 600

REVISED 02–03

Clean Water Services
Our commitment is clear.

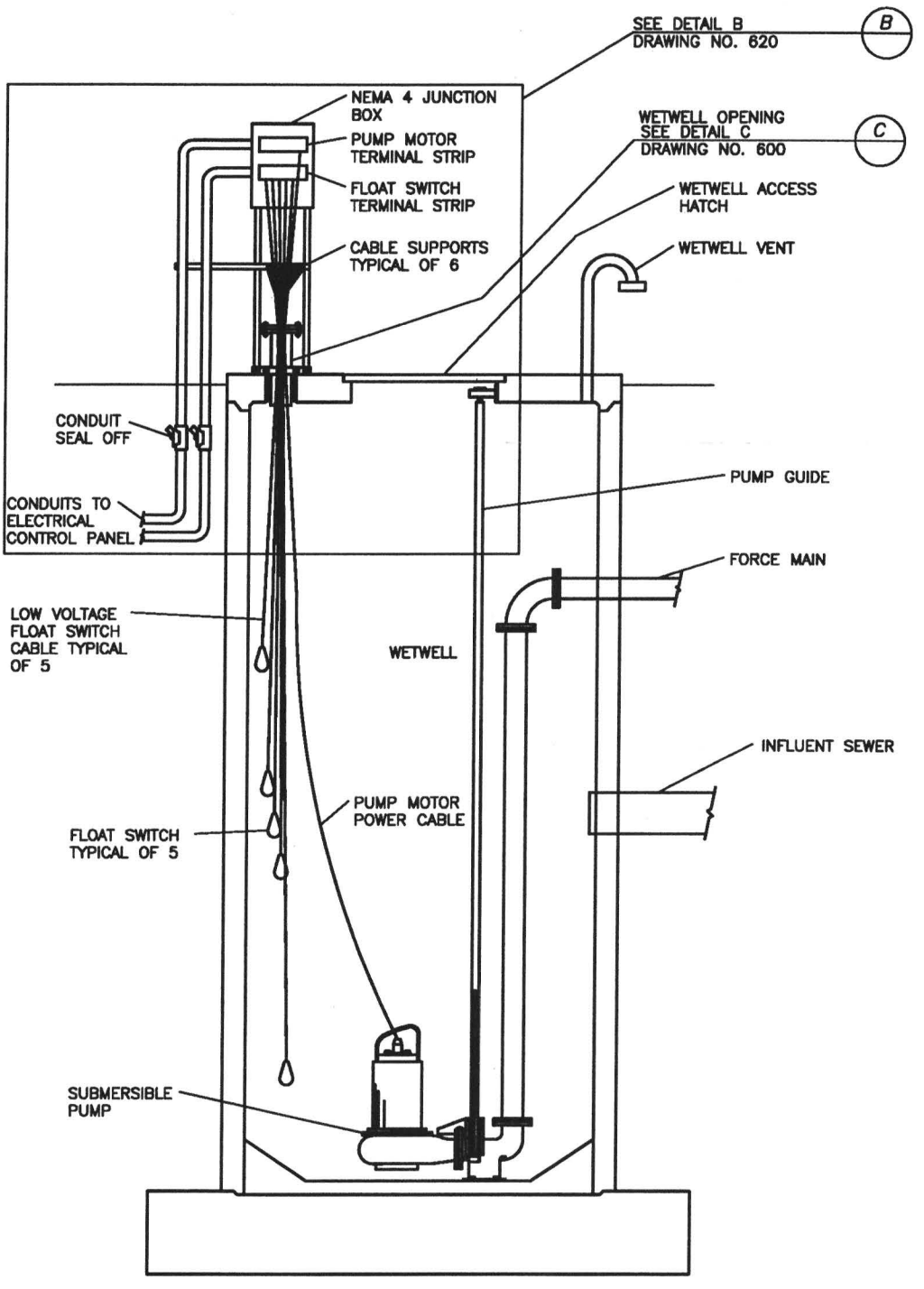

PUMPSTATION SECTION A

A

NTS

FLOAT SWITCH SECTION A

DRAWING NO. 610

REVISED 02-03

Clean Water Services
Our commitment is clear.

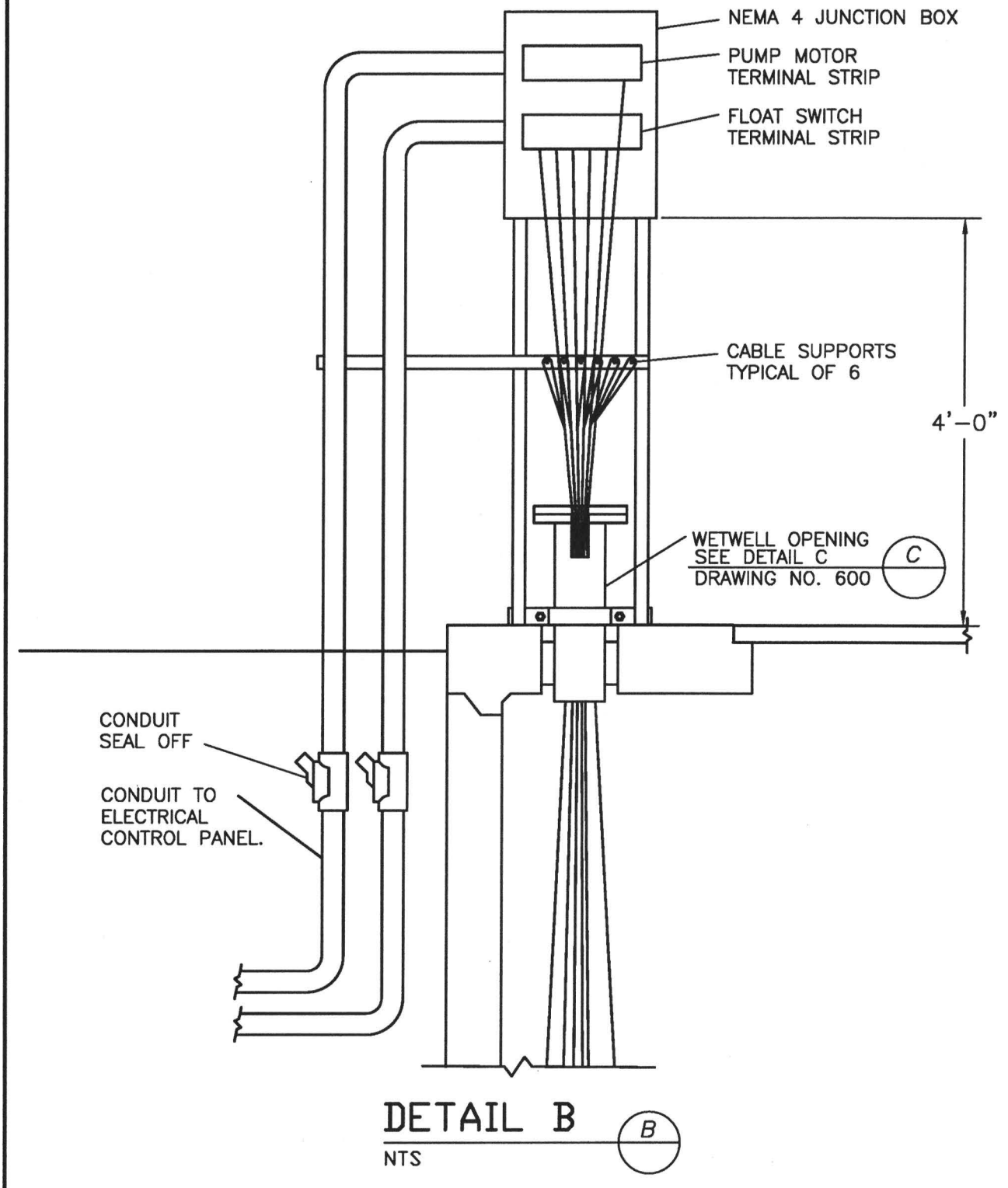

DETAIL B

NTS

B

FLOAT SWITCH DETAIL B

DRAWING NO. 620

REVISED 02-03

Clean Water Services

Our commitment is clear.

Sample Design Data Table	
Basin Area	XX Acres
Equivalent Dwelling Units (EDU) Per Acre	XX EDU/AC
Persons Per EDU	XX
Population Equivalent	XX
Average Per Capita Flow	XX GPM
Infiltration And Inflow	XX GPM
Average Daily Flow (ADF)	XX GPM
Peak Hourly Flow	XX GPM
Pump Type	Description
Pump Horsepower	XX HP
Capacity Per Pump	XX GPM
Maximum Pump Starts Per Hour	XX
Wet Well Volume	XX GAL
Level Control Type	Ultrasonic or Float
Standby Power Generator	XX KW
Fuel Tank Capacity	XX GAL
Force Main Length	XX FT
Force Main Velocity At ADF	XX FPS
Average Detention Time At Average Daily Flow	XX MIN

SAMPLE DESIGN DATA TABLE

DRAWING NO. 630

REVISED 02-03

Clean Water Services
Our commitment is clear.

NOTES:

1) INSTALL GAUGES AS SHOWN ON 1/2" DOUBLE STRAP PIPE SADDLE.

2) ALL THREADED STAINLESS STEEL SCHEDULE 80.

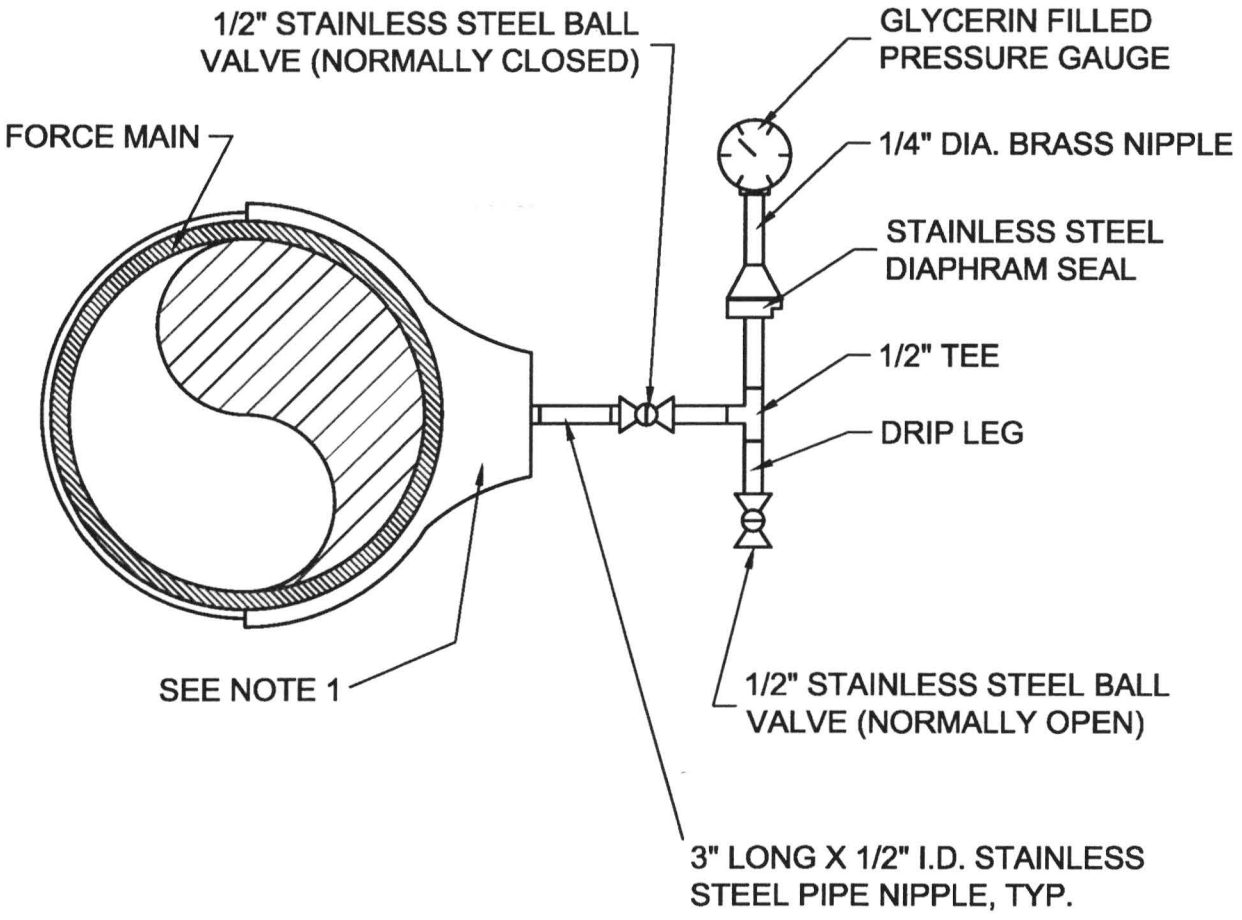

FORCE MAIN PRESSURE GAUGE DETAIL

N.T.S.

FORCE MAIN PRESSURE GAUGE

DRAWING NO. 640

REVISED 02-03

Clean Water Services
Our commitment is clear.

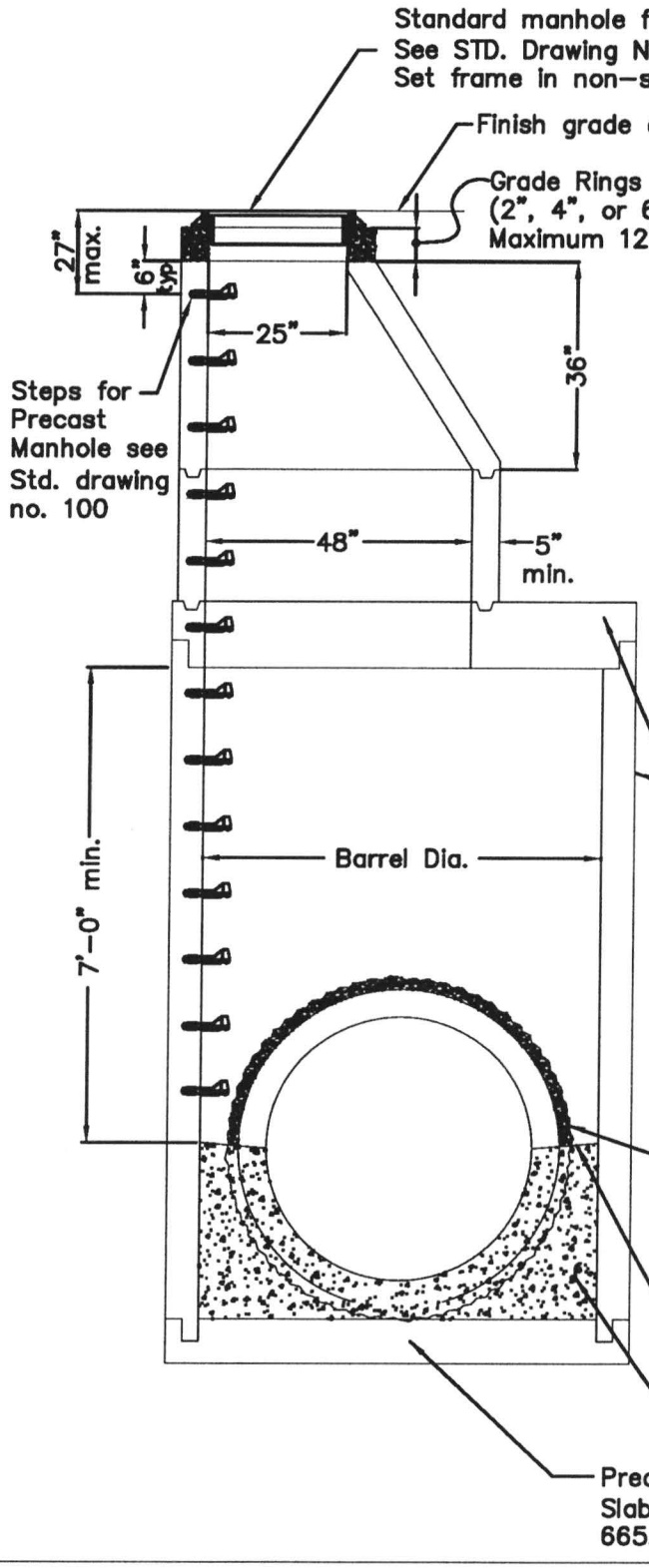

Notes:

1. All poured in place concrete shall have a 28 day ultimate strength of 4000 psi and a 2" to 4" slump.
2. All reinforcement shall have a minimum yield strength of 60,000 psi (Grade 60).
3. All precast joints shall be grouted or rubber gasketed.
4. Sections and cone shall be in accordance with ASTM C478.

MAXIMUM THROUGH PIPE SIZES

Barrel Dia.	Max. Pipe Dia.
60"	36"
72"	48"
84"	60"
96"	72"
108"	84"
120"	96"

LARGE PRECAST CONCRETE MANHOLE

DRAWING NO. 650

REVISED 02-03

Clean Water Services
Our commitment is clear.

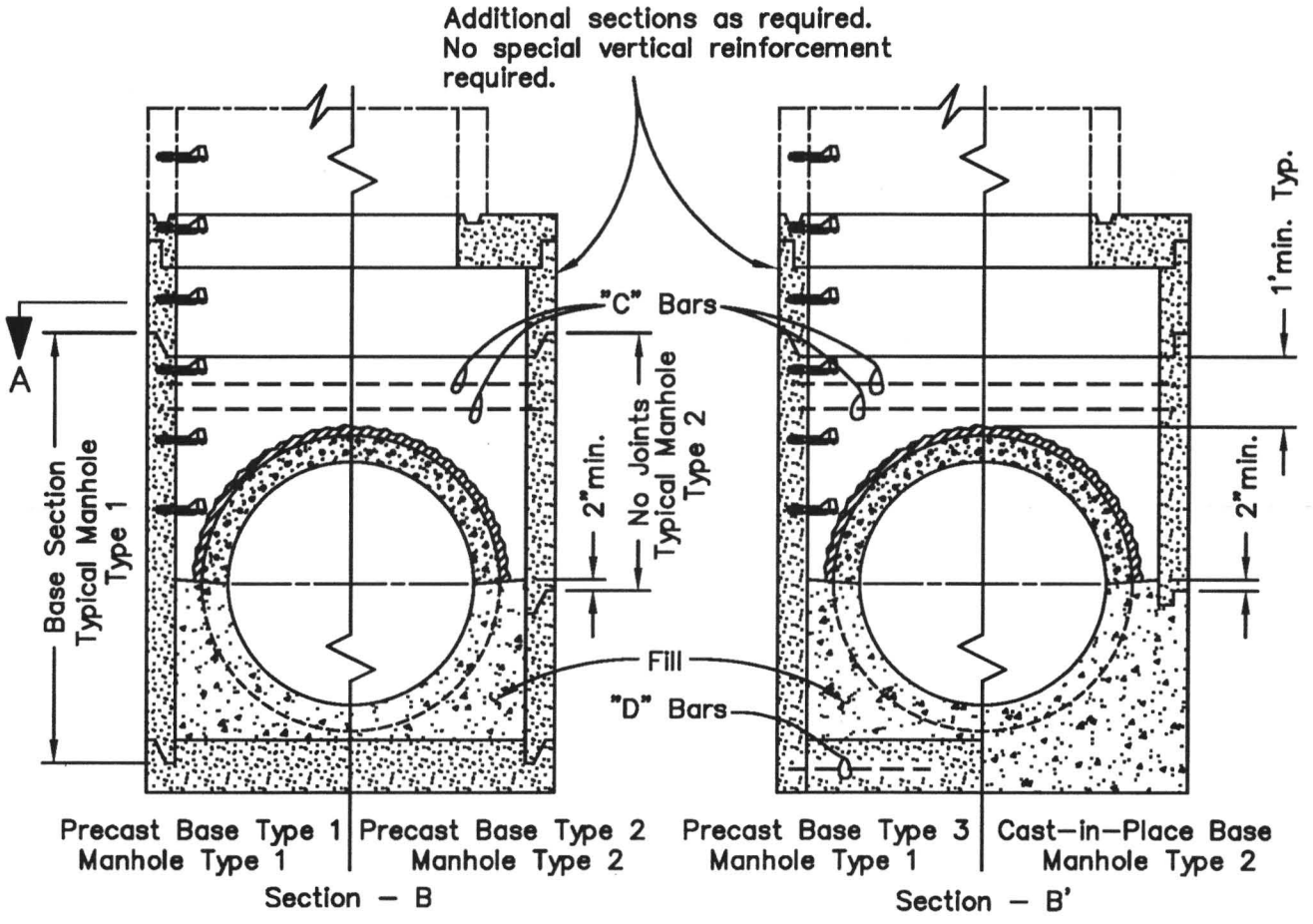

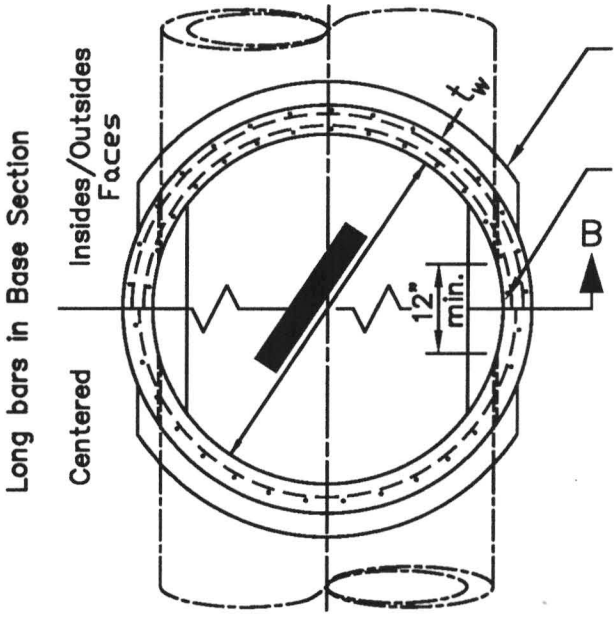

NOTES: (Manhole Bases & Base Sections)

1. Manhole Type 1 is continuous from bottom slab to 12" above pipe breakout.
2. Manhole Types 1 & 2 may have either precast or cast-in-place base.
3. Manhole sections shall be manufactured in accordance to the requirements shown on Std. drawing NO. 660 and 670.
4. Manhole Type 2 shall hove no joints between 1' above pipe breakout opening and 2" below pipe spring line.
5. Manhole sections shall be manufactured in accordance with ASTM C76 or C478 except longitudinal (vert.) steel shall meet or exceed that shown on Std. drawing NO. 670.

LARGE PRECAST CONCRETE MANHOLE – BASES

Drawing NO. 655

REVISED 02-03

Clean Water Services
Our commitment is clear.

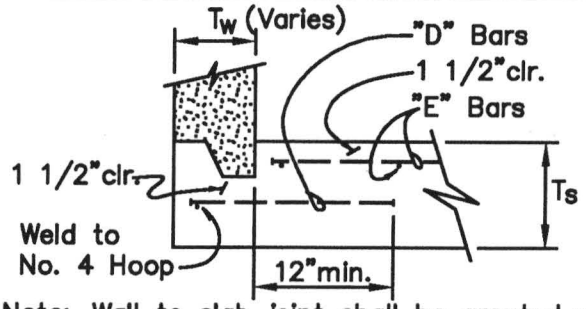

Note: Wall to slab joint shall be grouted when slab is cast separately.

PRECAST BASE SLAB TYPE 1**

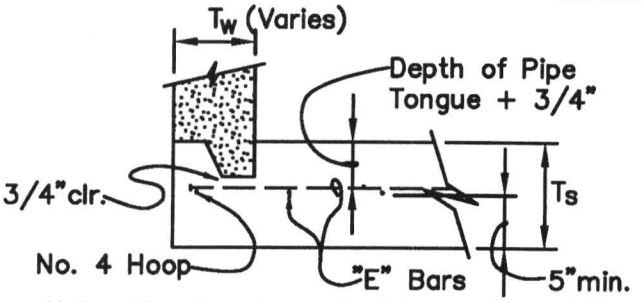

Note: Grout not required for slab cast in contact with manhole section.

PRECAST BASE SLAB TYPE 2**

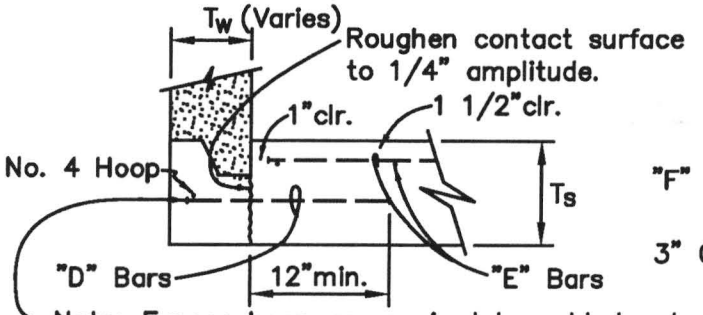

Note: Expose hoop as required to weld dowels to hoop. Remove only enough concrete to accomplish weld. Patch before casting base to ensure no voids are present.

PRECAST BASE SLAB TYPE 3

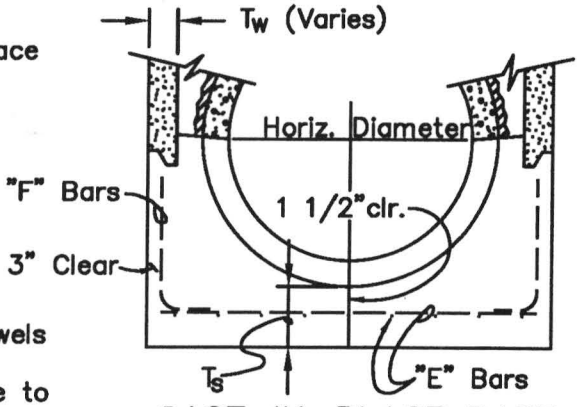

CAST-IN-PLACE BASE
(OR PRECAST BASE TYPE 4)

SIZE		60"		72"		84"		96"	
Type	Depth*	0'–15'	15'–30'	0'–15'	15'–30'	0'–15'	15'–30'	0'–15'	15'–30'
1	Ts	8.0"	9.0"	8.0"	9.0"	9.0"	10.0"	9.0"	11.0"
	D Bars	#3 @ 12"	#3 @ 12"	#3 @ 12"	#4 @ 10"	#3 @ 10"	#4 @ 11"	#3 @ 9"	#4 @ 11"
	E Bars	#4 @ 12"	#4 @ 9"	#4 @ 9"	#4 @ 6"	#4 @ 8"	#5 @ 9"	#4 @ 7"	#5 @ 8"
2	Ts	11.0"	12.0"	11.0"	12.0"	12.0"	13.0"	12.0"	14.0"
	E Bars	#4 @ 12"	#4 @ 8"	#4 @ 9"	#5 @ 8"	#4" @ 7"	NO.5 @ 7"	#4 @ 5"	#5 @ 6"
3	Ts	7.0"	9.0"	7.0"	9.0"	8.0"	10.0"	9.0"	11.0"
	D Bars	#3 @ 12"	#3 @ 12"	#3 @ 12"	#4 @ 10"	#3 @ 10"	#4 @ 11"	#3 @ 9"	#4 @ 11"
	E Bars	#4 @ 12"	#4 @ 9"	#4 @ 9"	#4 @ 6"	#4 @ 8"	#5 @ 9"	#4" @ 7"	#5 @ 8"
4	Ts	7.0"	9.0"	7.0"	9.0"	8.0"	10.0"	9.0"	11.0"
	E Bars	#4 @ 12"	#4 @ 9"	#4 @ 9"	#4 @ 6"	#4 @ 8"	#5 @ 9"	#4" @ 7"	#5 @ 8"
	F Bars	#4 @ 12"	#4 @ 9"	#4 @ 9"	#4 @ 6"	#4 @ 8"	#5 @ 9"	#4" @ 7"	#5 @ 8"

*Invert to Street Grade

Concrete: f'_c =4,000 psi

Steel: f_y =Grade 60

**Fabricator required to cast lifting loops in base slab for handling Type 1 & 2 bases.

DDT 11/28/1999

LARGE PRECAST CONCRETE MANHOLE – TYPES

DRAWING NO.660

REVISED 02–03

Clean Water Services
Our commitment is clear.

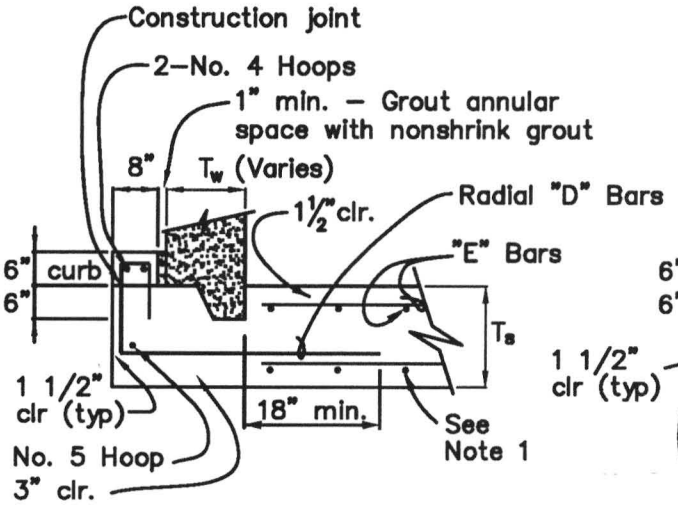

PRECAST BASE SLAB TYPE 5

1. Add bottom mat of No. 3 bars each way at same spacing as top mat.
2. Wall to slab joint shall be field grouted.
3. Curb is continuous all around base slab.
4. If curb is not cast monolithic with base slab, provide construction joint as shown.

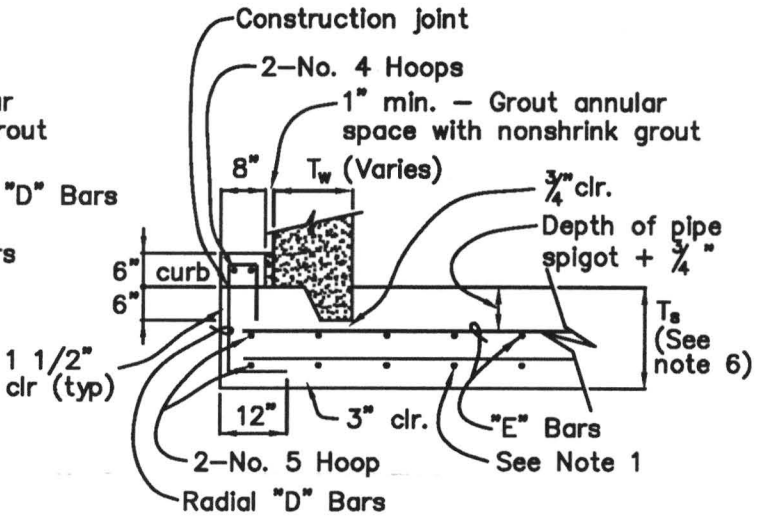

PRECAST OR CAST–IN–PLACE BASE SLAB TYPE 6

1. Add bottom mat of No. 3 bars each way at same spacing as top mat.
2. Wall to slab joint shall be field grouted. Grout is not required for slab cast in contact with manhole section.
3. Curb is continuous all around base slab.
4. If curb is not cast monolithic with base slab, provide construction joint as shown.
5. Base slab Type 6 may be precast or cast–in–place concrete.
6. Ts for base slab Type 6 assumes a 6 1/4" spigot depth. Adjust Ts for actual spigot depth.
7. Curb may be cast in place against riser pipe without grouting.

SIZE		108"		120"	
Type	Depth*	0'–15'	15'–30'	0'–15'	15'–30'
5	T_s	10"	12"	10"	12"
	"D" Bars	No.4 @ 12"	No.5 @ 12"	No.4 @ 12"	No.5 @ 12"
	"E" Bars	No.5 @ 12"	No.5 @ 12"	No.5 @ 12"	No.6 @ 12"
6	T_s	15.5"	17.5"	15.5"	17.5"
	"D" Bars	No.4 @ 12"	No.5 @ 12"	No.4 @ 12"	No.5 @ 12"
	"E" Bars	No.5 @ 12"	No.5 @ 12"	No.5 @ 12"	No.6 @ 12"

*Invert to Street Grade
Concrete: f'_c = 4,000 psi
Steel: Grade 60

LARGE PRECAST CONCRETE MANHOLE BASE SLABS

DRAWING NO. 665

REVISED 02–03

Clean Water Services
Our commitment is clear.

60"ø Manhole Section

NOTE: MAX. LONG. BAR SPACING IS 12" C.–C.

	INVERT TO STREET GRADE	T_w =5.0"			T_w = 6.0"			T_w =6.75"		
		OUTSIDE	INSIDE	ON CTR.	OUTSIDE	INSIDE	ON CTR.	OUTSIDE	INSIDE	ON CTR.
TYPE 1	0 Ft to 15 Ft	0.16	0.15	0.24	0.16	0.09	0.20	0.13	0.08	0.17
	15 Ft to 30 Ft	0.32	0.18	0.53	0.25	0.19	0.42	0.22	0.16	0.36
TYPE 2	0 Ft to 15 Ft	0.17	0.15	0.28	0.19	0.09	0.22	0.16	0.08	0.20
	15 Ft to 30 Ft	0.37	0.18	0.63	0.28	0.19	0.48	0.24	0.16	0.42

'C' Bars–1 No. 4 hoop req'd. for less than 2'–0" clr. between blockout and top of section.

72"ø Manhole Section

NOTE: MAX. LONG. BAR SPACING IS 12" C.–C.

	INVERT TO STREET GRADE	T_w =6.0"			T_w = 7.0"			T_w =7.75"		
		OUTSIDE	INSIDE	ON CTR.	OUTSIDE	INSIDE	ON CTR.	OUTSIDE	INSIDE	ON CTR.
TYPE 1	0 Ft to 15 Ft	0.19	0.19	0.26	0.17	0.16	0.22	0.16	0.14	0.20
	15 Ft to 30 Ft	0.33	0.28	0.58	0.27	0.23	0.48	0.26	0.26	0.42
TYPE 2	0 Ft to 15 Ft	0.19	0.13	0.28	0.18	0.15	0.23	0.16	0.17	0.28
	15 Ft to 30 Ft	0.36	0.13	0.65	0.29	0.15	0.52	0.26	0.17	0.46

'C' Bars– 2 NO. 5 HOOPS 2" CLR. OF TOP OF MH BARREL } REQ'D. FOR LESS THAN 2'–0" CLR.
2 NO. 3 HOOPS 2" CLR. OVER PIPE BLOCKOUTS } BETWEEN BLOCKOUT AND TOP OF SECTION.

84"ø Manhole Section

NOTE: MAX. LONG. BAR SPACING IS 12" C.–C.

	INVERT TO STREET GRADE	T_w =7.0"			T_w = 8.0"			T_w =8.75"		
		OUTSIDE	INSIDE	ON CTR.	OUTSIDE	INSIDE	ON CTR.	OUTSIDE	INSIDE	ON CTR.
TYPE 1	0 Ft to 15 Ft	0.20	0.13	0.26	0.17	0.12	0.22	0.15	0.10	0.20
	15 Ft to 30 Ft	0.33	0.23	0.59	0.28	0.26	0.50	0.30	0.23	0.45
TYPE 2	0 Ft to 15 Ft	0.23	0.15	0.33	0.21	0.17	0.28	0.19	0.19	0.25
	15 Ft to 30 Ft	0.36	0.15	0.65	0.30	0.17	0.55	0.30	0.19	0.49

'C' Bars– 2 NO. 5 HOOPS 2" CLR. OF TOP OF MH BARREL } REQ'D. FOR LESS THAN 2'–0" CLR.
2 NO. 3 HOOPS 2" CLR. OVER PIPE BLOCKOUTS } BETWEEN BLOCKOUT AND TOP OF SECTION.

96"ø Manhole Section

NOTE: MAX. LONG. BAR SPACING IS 12" C.–C.

	INVERT TO STREET GRADE	T_w =8.0"			T_w = 9.0"			T_w =9.75"		
		OUTSIDE	INSIDE	ON CTR.	OUTSIDE	INSIDE	ON CTR.	OUTSIDE	INSIDE	ON CTR.
TYPE 1	0 Ft to 15 Ft	0.25	0.18	0.33	0.21	0.16	0.29	0.21	0.14	0.27
	15 Ft to 30 Ft	0.41	0.26	0.77	0.35	0.30	0.66	0.37	0.27	0.59
TYPE 2	0 Ft to 15 Ft	0.26	0.17	0.34	0.22	0.19	0.30	0.20	0.21	0.28
	15 Ft to 30 Ft	0.43	0.17	0.82	0.37	0.19	0.70	0.34	0.21	0.63

'C' Bars– 2 NO. 5 HOOPS 2" CLR. OF TOP OF MH BARREL } REQ'D. FOR LESS THAN 2'–0" CLR.
2 NO. 3 HOOPS 2" CLR. OVER PIPE BLOCKOUTS } BETWEEN BLOCKOUT AND TOP OF SECTION.

DDT 12/08/1999

PROVIDE MIN. LONGITUD. REINF. AS SHOWN, 1" CLR. OF INSIDE AND OUTSIDE FACES, OR AT CENTER OF WALL

AREAS ARE IN^2/FT OF CIRCUMFERENCE AND MAY BE WELDED WIRE FABRIC, BARS OR A COMBINATION OF BOTH.

LARGE PRECAST CONCRETE MANHOLE – LONG. BASE SECTION REINF.

DRAWING NO. 670

REVISED 02–03

Clean Water Services
Our commitment is clear.

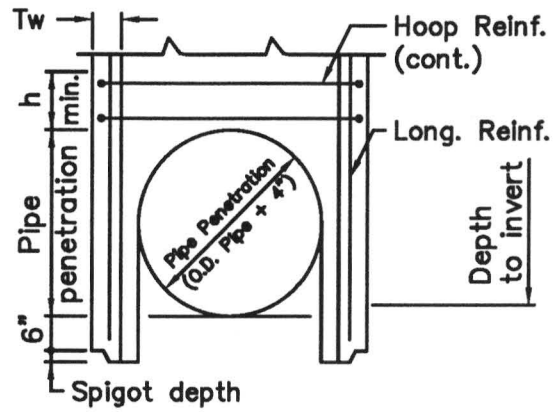

For Base Slab see 4–08–3A

MANHOLE BASE SECTION
ELEVATION

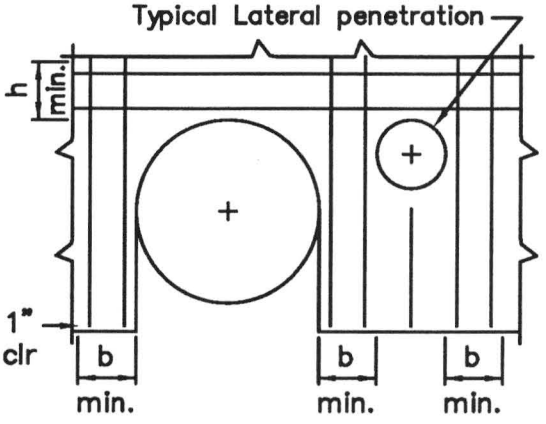

For Base Slab see 4–08–3A

PARTIAL MANHOLE BASE
SECTION ROLLOUT

Notes:

1. Manufacture manhole base section and risers above in conformance with ASTM C478 except as noted in specifications and herein. Lap length for hoop reinforcement in band "h" shall be 30 bar diameters and laps shall be staggered.
2. Steel reinforcement in bands "h" and "b" is in addition to that required by ASTM C478 and is shown in square inches per foot of band width. Bar spacing shall not exceed 6".
3. Manhole base sections shall have no joints below top of band "h".
4. Concrete: f'c = 4,000 psi
   Reinforcement steel: Grade 60
5. There shall be no penetrations in hoop band "h" above main line pipe penetrations or in longitudinal bands "b" next to both sides of all openings.
6. Additional longitudinal reinforcement area can be reduced 50% outside of "b" bands.
7. Thickness "Tw" is minimum manhole base section wall thickness for a given pipe diameter.
8. Do not backfill until concrete fill over the manhole base has achieved 90% of its compressive strength (4,000 psi). For shape of concrete fill see Std. Drawing NO. 650.
9. Provide 6"x6" concrete collar around pipe penetrations per Std. Drawing NO. 655.

MH Dia. (in)	Thickness Tw min. (in)	Band Width h=b min. (ft)	Depth to Invert max. (ft)	Inside Pipe Dia. (in)	Additional Reinforcement Required			
					Hoop Reinf. (h)		Long. Reinf. (b)	
					Outside Face (in^2/ft)	Inside Face (in^2/ft)	Outside Face (in^2/ft)	Inside Face (in^2/ft)
108	9	1.00	15	48 or less	.381	.381	.260	.260
108	9	1.25	15	54–60	.381	.381	.394	.394
108	10	1.75	15	66–84	.381	.381	.643	.643
108	11	1.00	30	48 or less	.790	.790	.432	.432
108	12	1.25	30	54–60	.790	.790	.576	.576
108	16	1.75	30	66–84	.790	.790	.773	.773
120	10	1.00	15	48 or less	.423	.423	.260	.260
120	10	1.50	15	54–72	.423	.423	.480	.480
120	11	2.00	15	78–96	.423	.423	.713	.713
120	11	1.00	30	48 or less	.880	.880	.432	.432
120	14	1.50	30	54–72	.880	.880	.677	.677
120	17	2.00	30	78–96	.880	.880	.991	.991

LARGE PRECAST CONCRETE MANHOLE
Base Section Reinforcement 108" & 120"

DRAWING NO. 675

REVISED 02–03

Clean Water Services
Our commitment is clear.

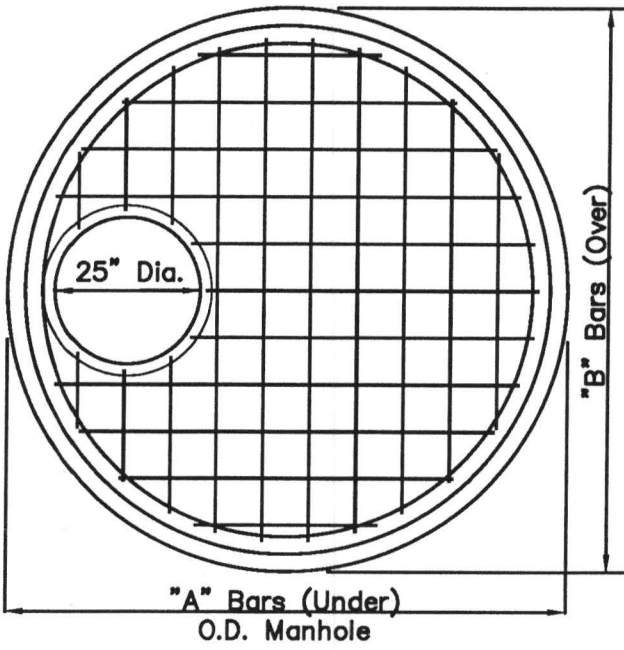

TOP SLAB "A"

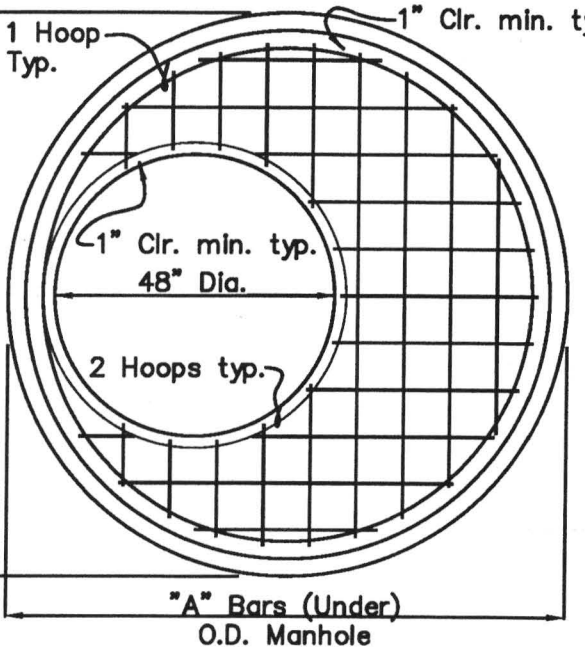

TOP SLAB "B"

NOTES:

1. All concrete shall have a 28 day ultimate compressive strength of 4,000 psi.
2. All reinforcement shall have a minimum yield strength of 60,000 psi, (Grade 60).
3. All lap splices shall be 24 bar diameters unless noted otherwise.
4. Add steps as required by Standard Drawing NO. 010

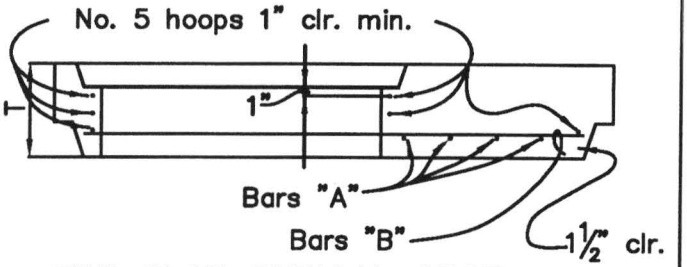

TOP SLAB TYPICAL SECTION

	TOP SLAB "A"			TOP SLAB "B"			TOP SLAB "B"		
	COVER DEPTH								
	6" to 12"			4'–0" to 7'–0"			7'–1" to 22'–0"		
Size	T	"A" Bars	"B" Bars	T	"A" Bars	"B" Bars	T	"A" Bars	"B" Bars
60"	8"	No.5 @ 7½"	No.5 @ 7½"	12"	No.5 @ 9"	No.5 @ 9"	12"	No.5 @ 9"	No.5 @ 9"
72"	10"	No.5 @ 7"	No.5 @ 7"	12"	No.5 @ 9"	No.5 @ 9"	12"	No.5 @ 7"	No.5 @ 7"
84"	11"	No.5 @ 7"	No.5 @ 7"	12"	No.5 @ 6"	No.5 @ 6"	12"	No.6 @ 6"	No.5 @ 7"
96"	12"	No.5 @ 6"	No.5 @ 6"	12"	No.5 @ 6"	No.5 @ 6"	14"	No.6 @ 6"	No.5 @ 6"
108"	N/A	N/A	N/A	12"	No.6 @ 8"	No.6 @ 8"	16"	No.7 @ 9"	No.7 @ 9"
120"	N/A	N/A	N/A	12"	No.6 @ 7"	No.6 @ 7"	16"	No.7 @ 8"	No.7 @ 8"

LARGE PRECAST CONCRETE MANHOLE
TOP SLABS

DRAWING NO. 680

REVISED 02–03

Clean Water Services
Our commitment is clear.

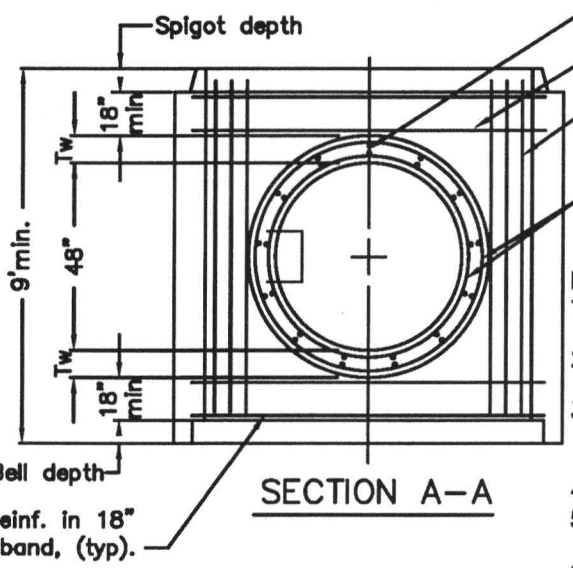

SECTION A–A

NOTES:

1. T–TOP Manhole as shown is for new pipline construction only.
2. T–TOP Manhole pipe section shall be Class V Pipe per ASTM C–76.
3. Reinforcement shown is in addition to that required for class V Pipe and is applied in both inside and outside faces.
4. Tw of riser = Tw of pipe but not less than 6".
5. Concrete f'c = 6000 psi Reinforcement Steel; Grade 60.
6. Maximum invert depth shall be 30'.
7. All pre–cast manhole riser sections shall comform to the requirements of ASTM C–478 and applicable provisions of standard manhole drawing NO. 010

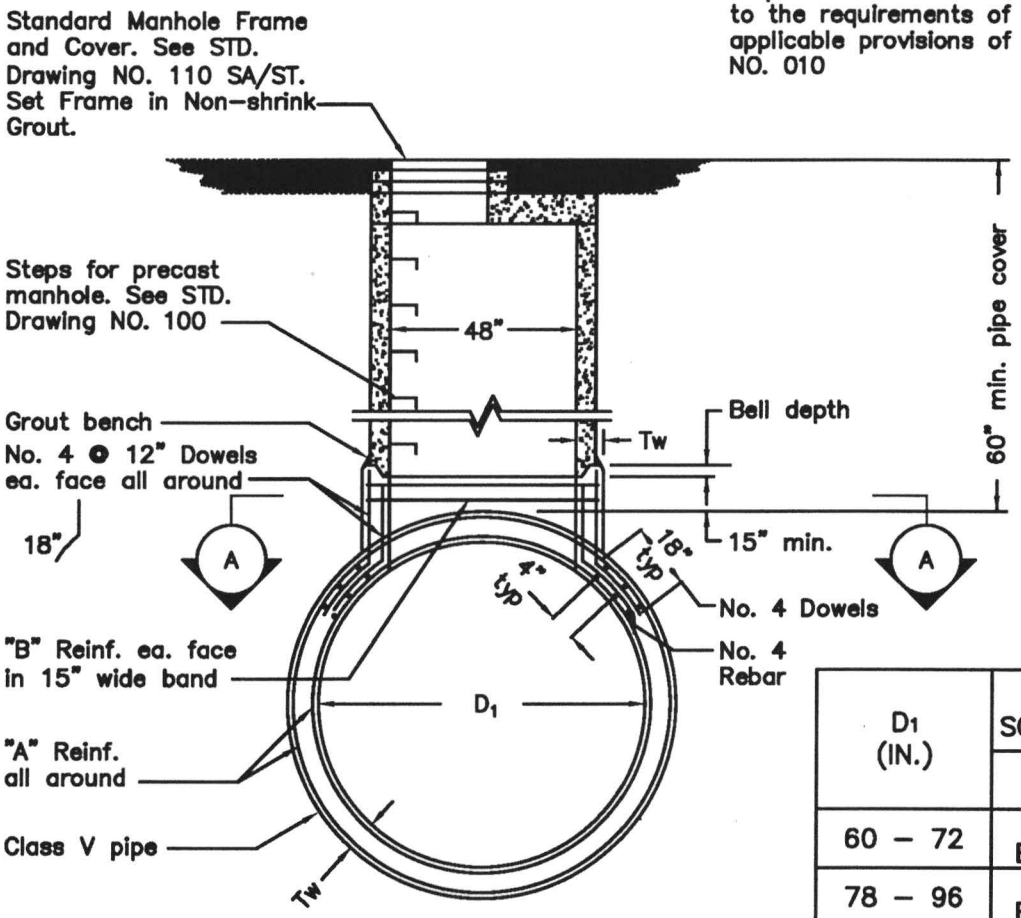

CROSS SECTION

D1 (IN.)	ADDITIONAL REINF. SQUARE INCHES (TOTAL)	
	"A"	"B"
60 – 72	.177 EA. FACE	.511 EA. FACE
78 – 96	.224 EA. FACE	.584 EA. FACE
102 – 120	.265 EA. FACE	.658 EA. FACE

T–TOP MANHOLE WITH 48" RISER

DRAWING NO. 685

REVISED 02–03

Clean Water Services
Our commitment is clear.

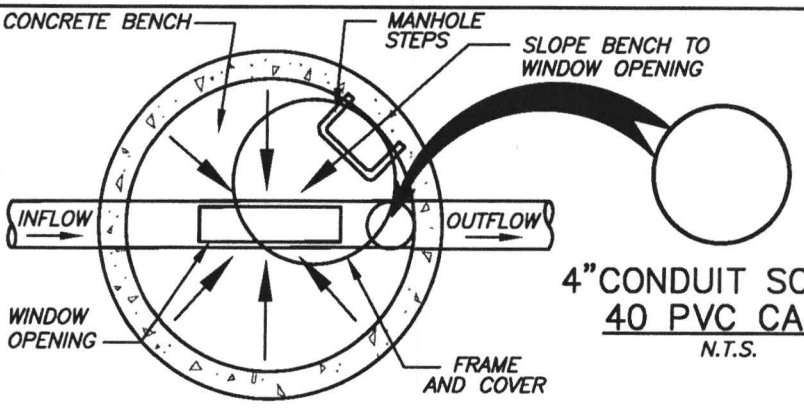

MANHOLE PLAN VIEW
N.T.S.

4"CONDUIT SCHEDULE
40 PVC CASING
N.T.S.

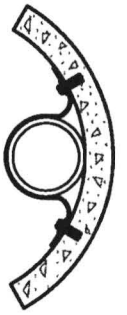

CLAMP DETAIL
(SECTION A–A)
N.T.S.

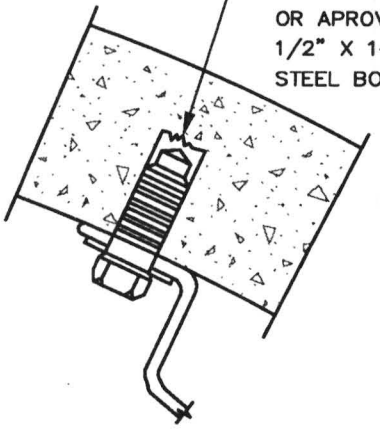

PARTITION ATTACHMENT

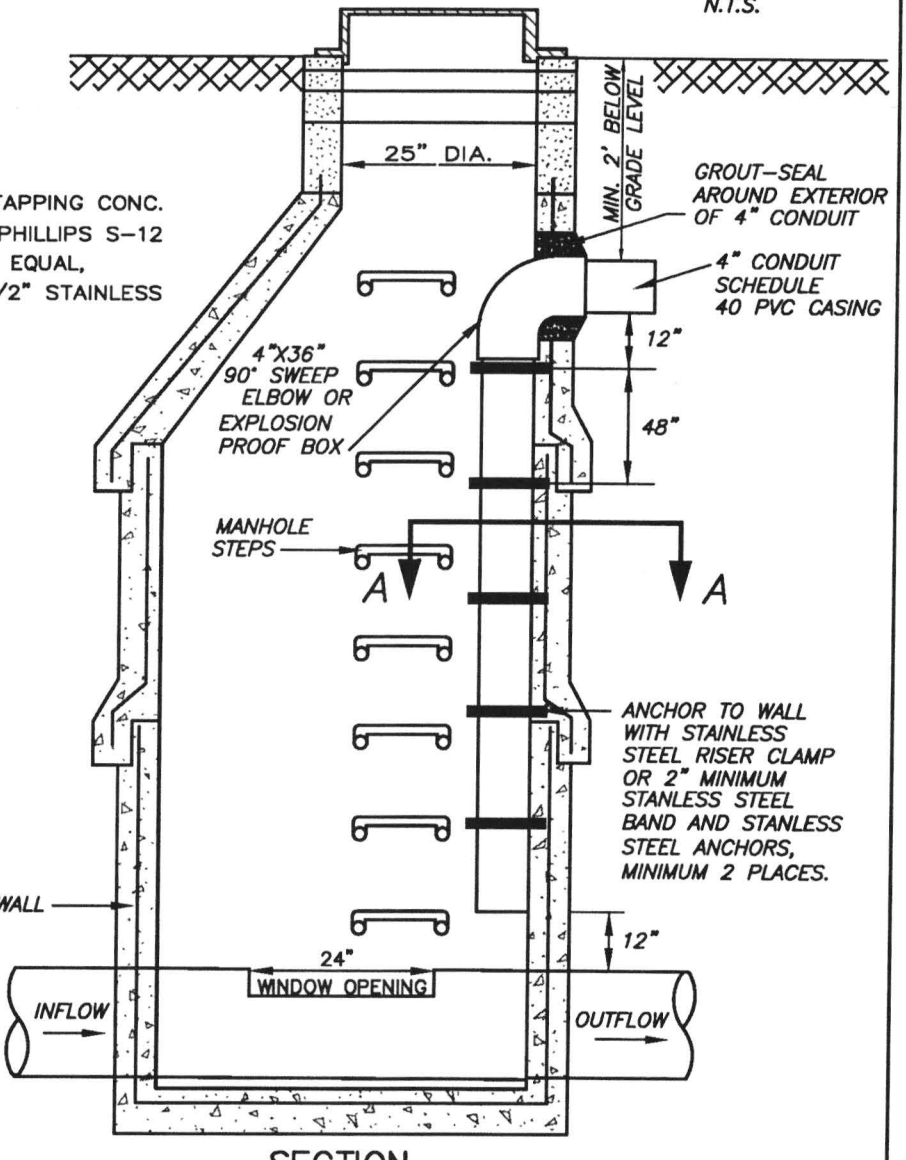

SECTION
N.T.S.

NOTES:
ALL MANHOLE SECTIONS SHALL CONFORM TO THE REQUIREMENT OF ASTM C478 AND APPLICABLE PROVISIONS OF STANDARD MANHOLE DRAWING NO. 010. AND NO. 030

SANITARY SEWER PERMANENT FLOW MONITOR DETAILS (MANHOLE CONDUIT INSTALLATION)

DRAWING NO. 695

REVISED 02–03

Clean Water Services
Our commitment is clear.

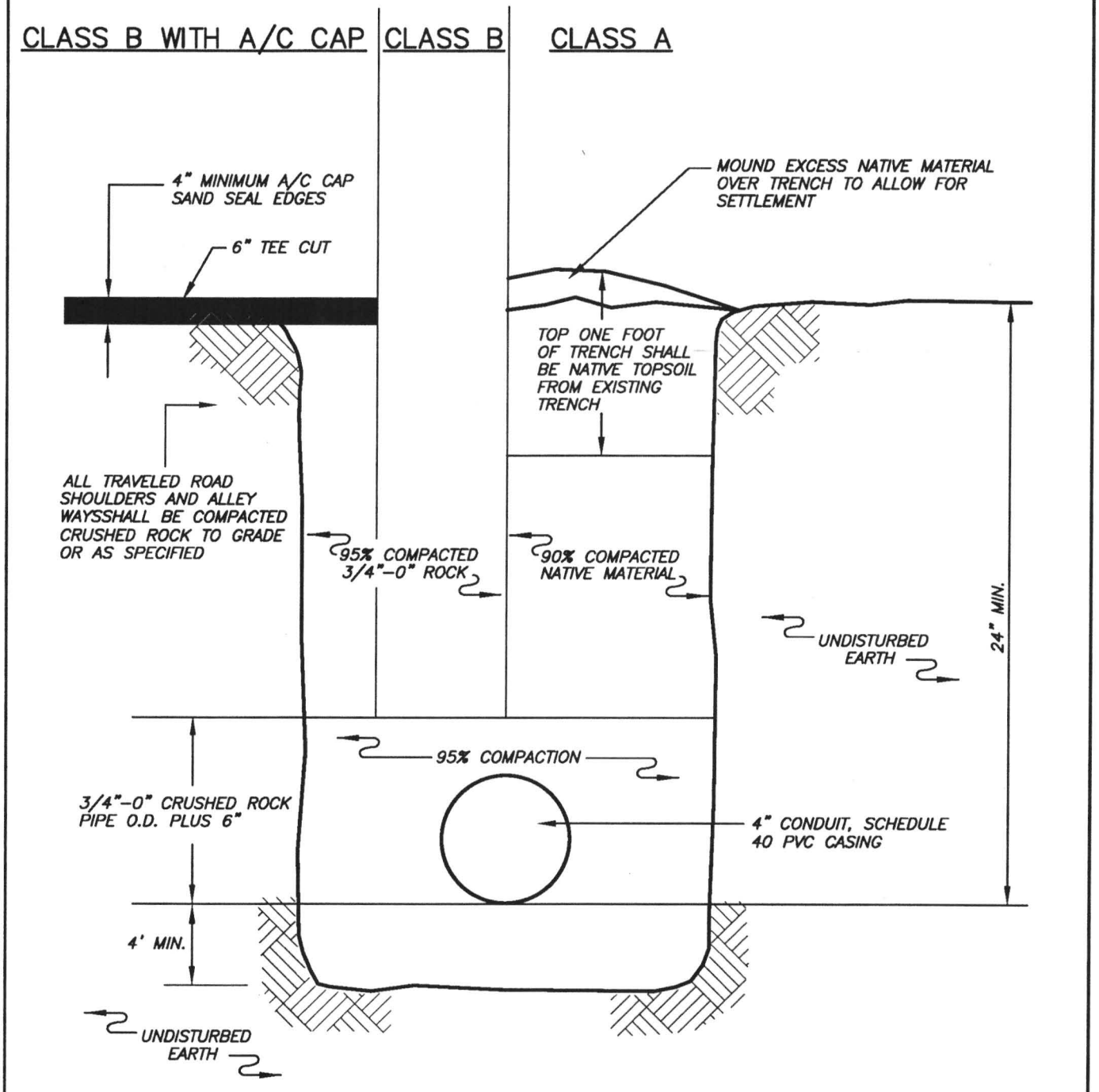

CONDUIT TRENCH BACKFILL DETAILS

DRAWING NO. 696

REVISED 02-03

Clean Water Services
Our commitment is clear.

AIR TEST FORM

PROJECT: _____ DATE: _____

CONTRACTOR: _____ PROJ #: _____

TESTING COMPANY: _____ INSPECTOR: _____

DATE	LINE	DSMH #	USMH #	DIA. (IN.)	LENGTH (FT)	TIME (MIN:SEC)	START TEST	STOP TEST	PASS/FAIL

NOTE: All air tests will be performed in accordance with ASTM C924 and current Construction Standards Resolution and Order.

Inspectors Signature: _____

AIR TEST FORM

DRAWING NO. 700 REVISED 02-03

Clean Water Services
Our commitment is clear.

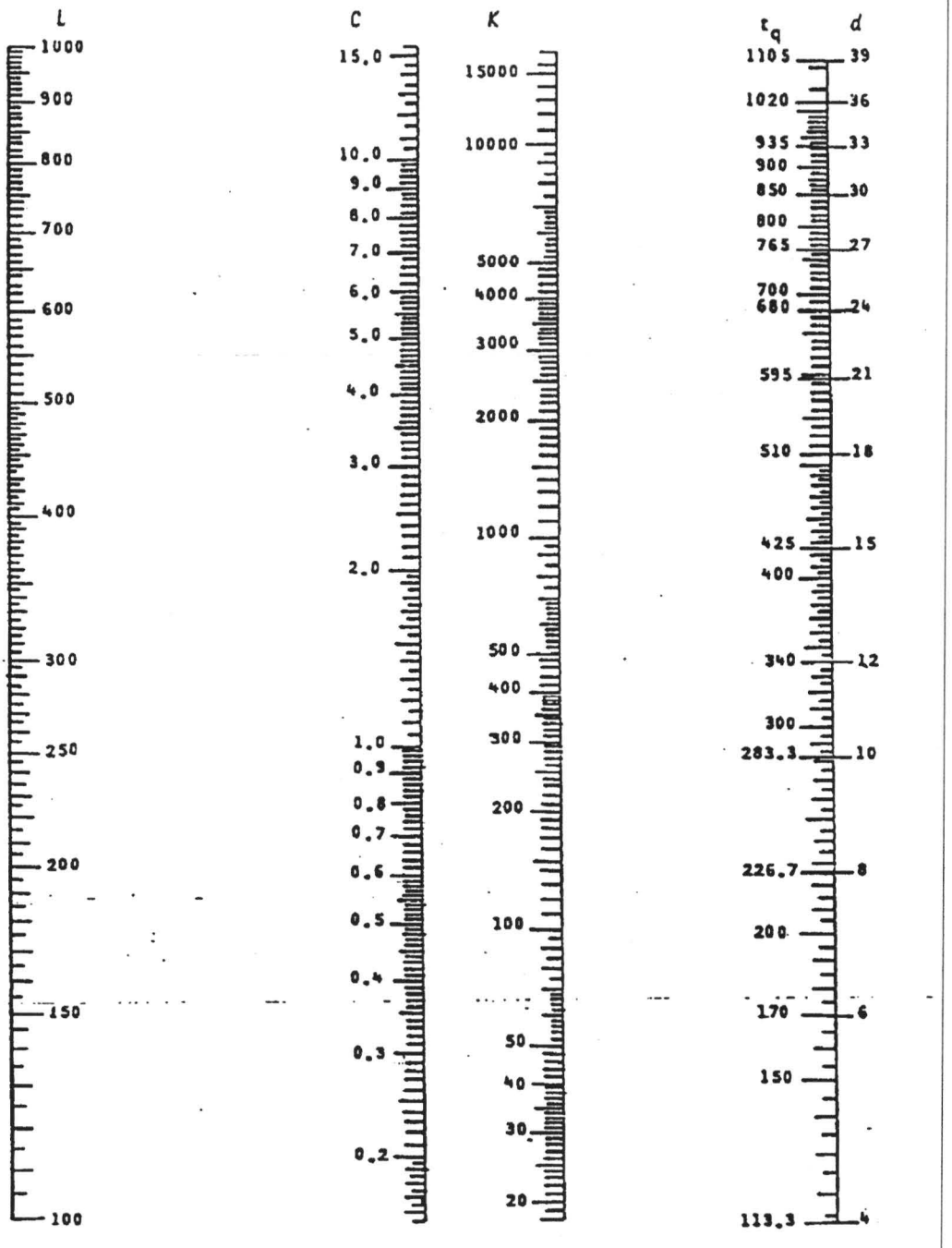

Fig. 1

NOMOGRAPH FOR THE SOLUTION OF $K = .011d^2L$, $C = .0003882dL$, $t_q = K \div C$

NOMOGRAPH

DRAWING NO. 705

REVISED 02–03

Clean Water Services
Our commitment is clear.

MANHOLE VACUUM TEST

PROJECT: _____ DATE: _____

CONTRACTOR: _____ PROJ #: _____

TESTING COMPANY: _____ INSPECTOR: _____

DATE	MH#	SIZE	DEPTH	REQD. TIME	TIME		NOTES/COMMENTS
					START	END	

NOTE: All manhole vacuum tests will be conducted in accordance with ASTM and current Construction Standards Resolution and Order.

Inspectors Signature: _____

MANHOLE VACUUM TEST

DRAWING NO. 710 REVISED 02-03

Clean Water Services
Our commitment is clear.

Clean Water Services
Our commitment is clear.

CLEAN WATER SERVICES OF WASHINGTON COUNTY

MANHOLE HYDROSTATIC TEST

PROJECT: _____ DATE: _____

CONTRACTOR: _____ PROJ #: _____

TESTING COMPANY _____ INSPECTOR _____

DATE	M.H. #	DEPTH	ALLOWABLE LOSS / HR.	ACTUAL LOSS / HR.	TIME		PASS / FAIL
					START	END	

COMMENTS:

NOTE: ALL MANHOLE HYDROSTATIC TEST WILL BE CONDUCTED IN ACCORDANCE WITH ASTM AND CURRENT CONSTRUCTION STANDARDS RESOLUTION ORDER, ALLOWABLE LEAKAGE SHALL NOT EXCEED 0.2 GALLONS PER HOUR PER FOOT OF HEAD MEASURED FROM INVERT TO TOP OF FRAME.

INSPECTORS SIGNATURE: _____

MANHOLE HYDROSTATIC TEST

DRAWING NO. 715 REVISED 02-03

Clean Water Services
Our commitment is clear.

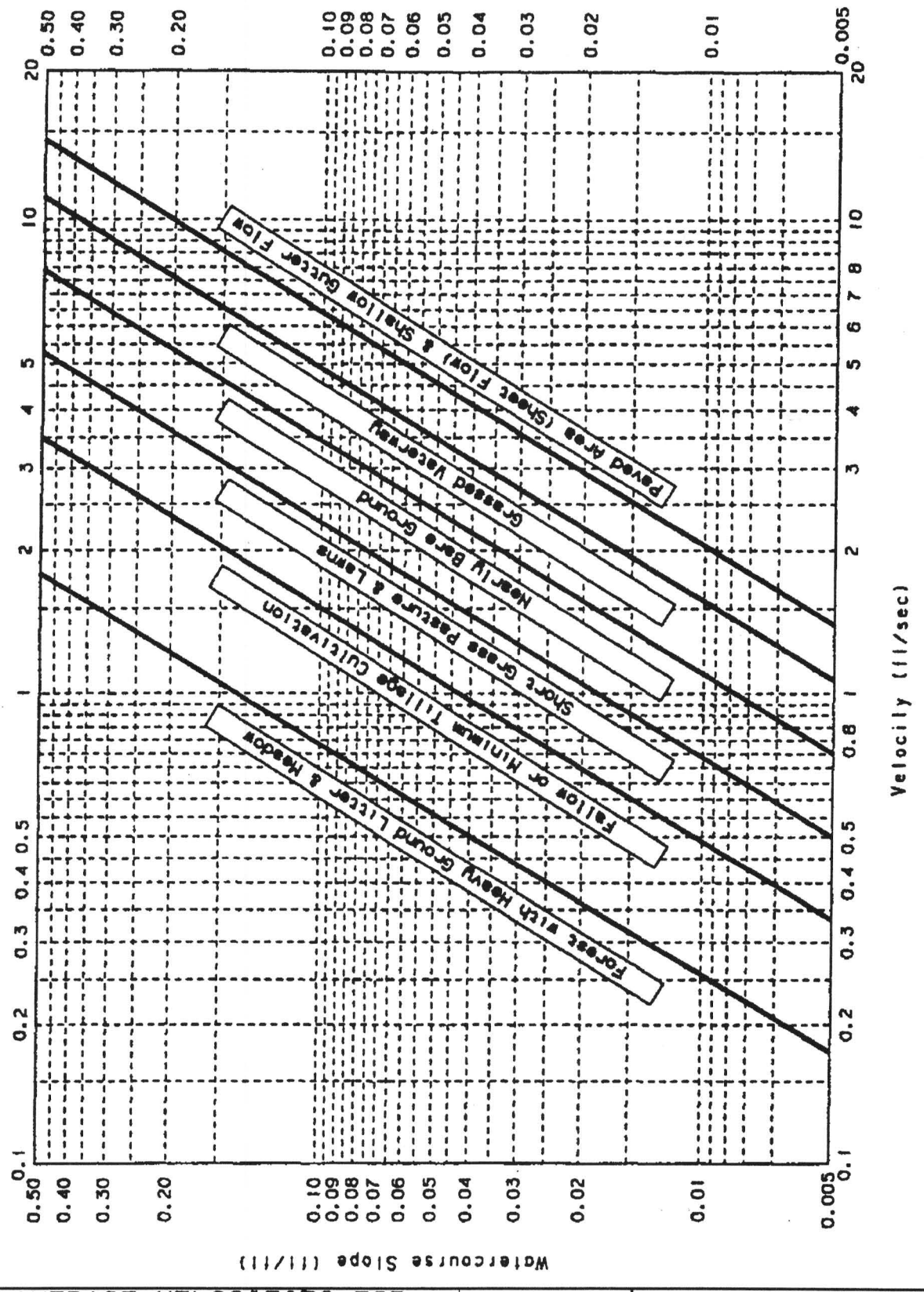

AVERAGE VELOCITIES FOR ESTIMATING TRAVEL TIME FOR OVERLAND FLOWS*

*For use with the Rational Method only; From Soil Conservation Service, Tech. Release No. 55, January 1975

DRAWING NO. 720

REVISED 02-03

Clean Water Services
Our commitment is clear.

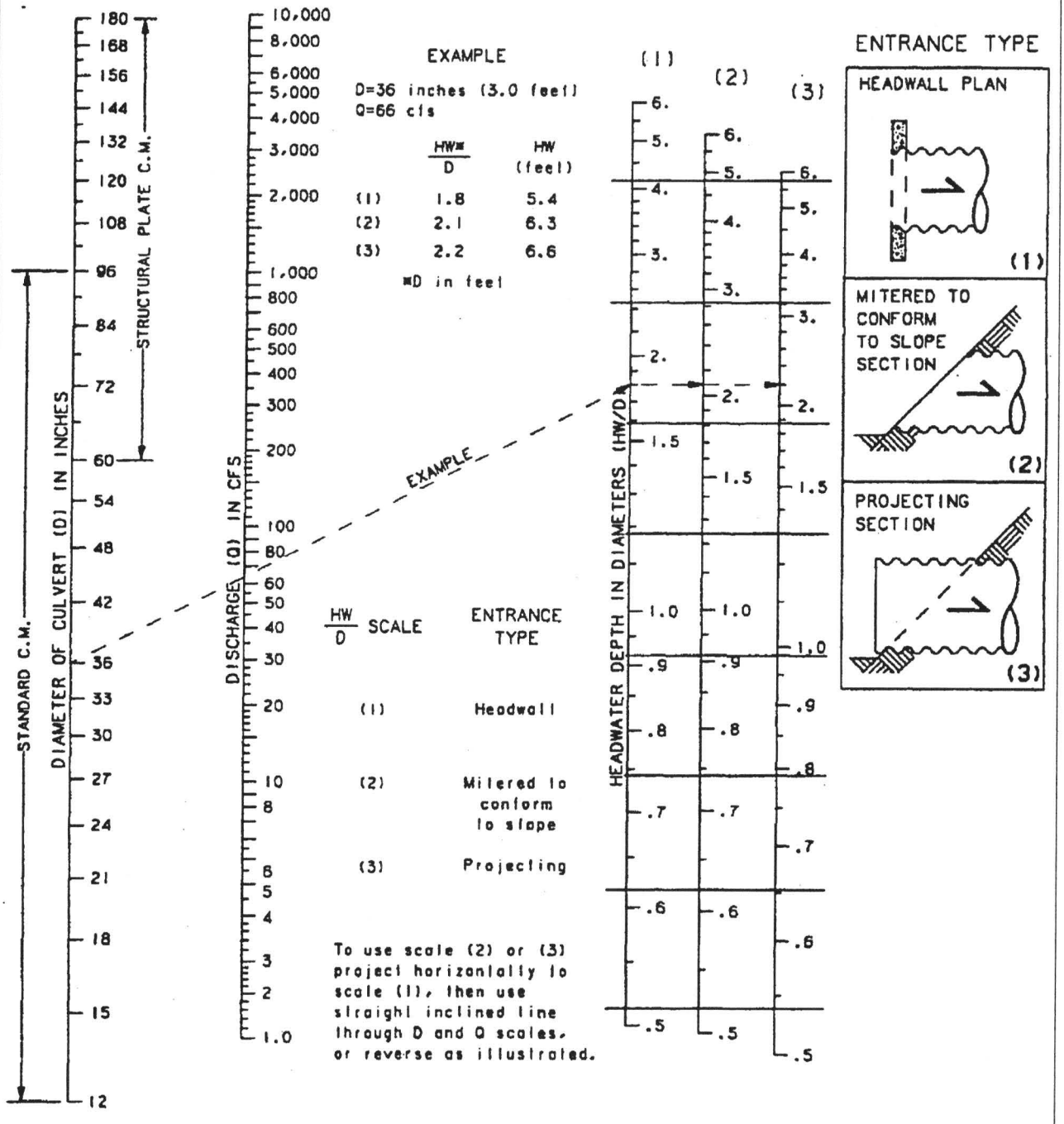

HEADWATER DEPTH FOR CORRUGATED PIPE W/INLET CONTROL

DRAWING NO. 725

REVISED 02-03

Clean Water Services
Our commitment is clear.

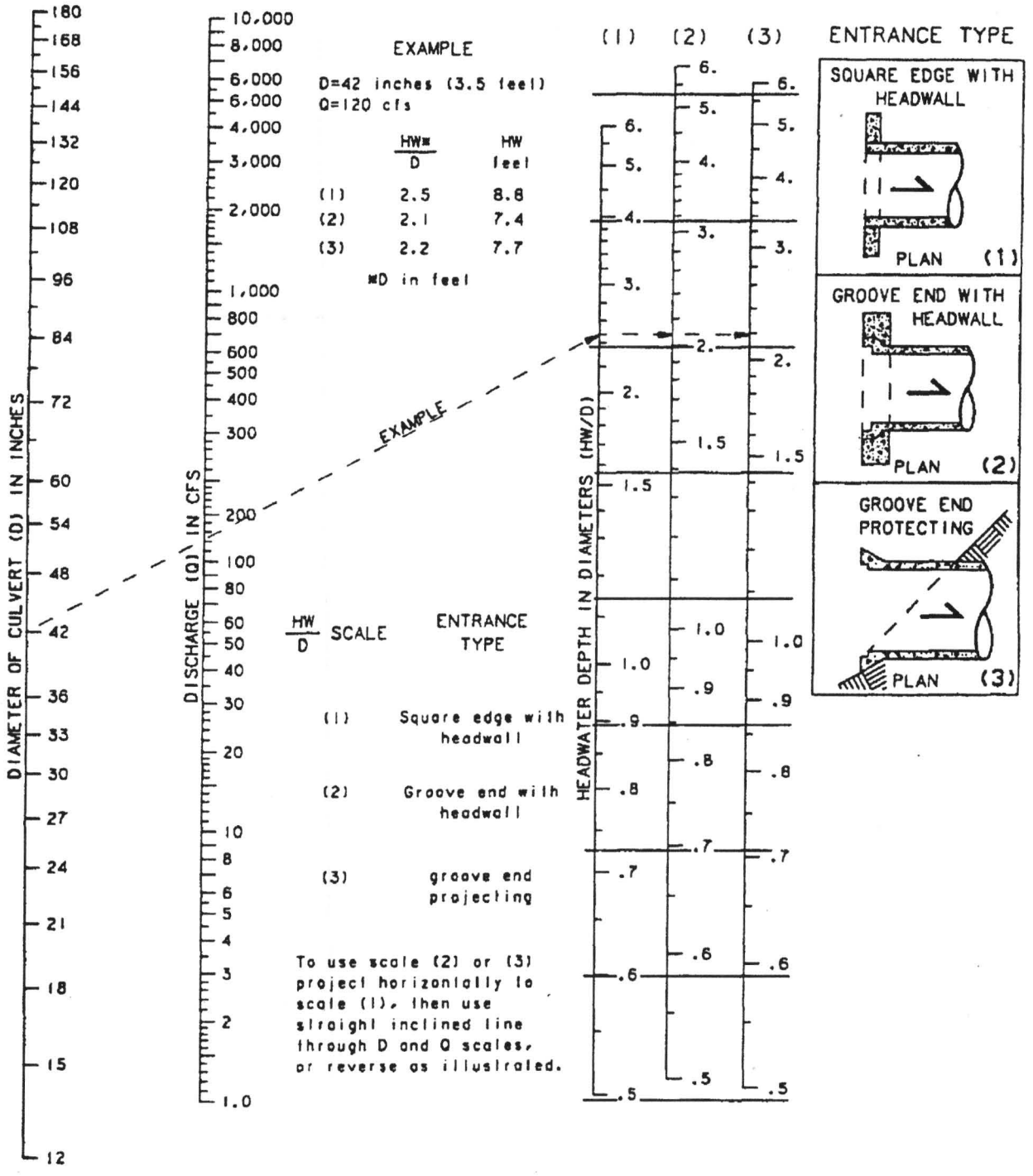

HEADWATER DEPTH FOR SMOOTH INTERIOR PIPE CULVERTS WITH INLET CONTROL

DRAWING NO. 730

REVISED 02-03

Clean Water Services
Our commitment is clear.

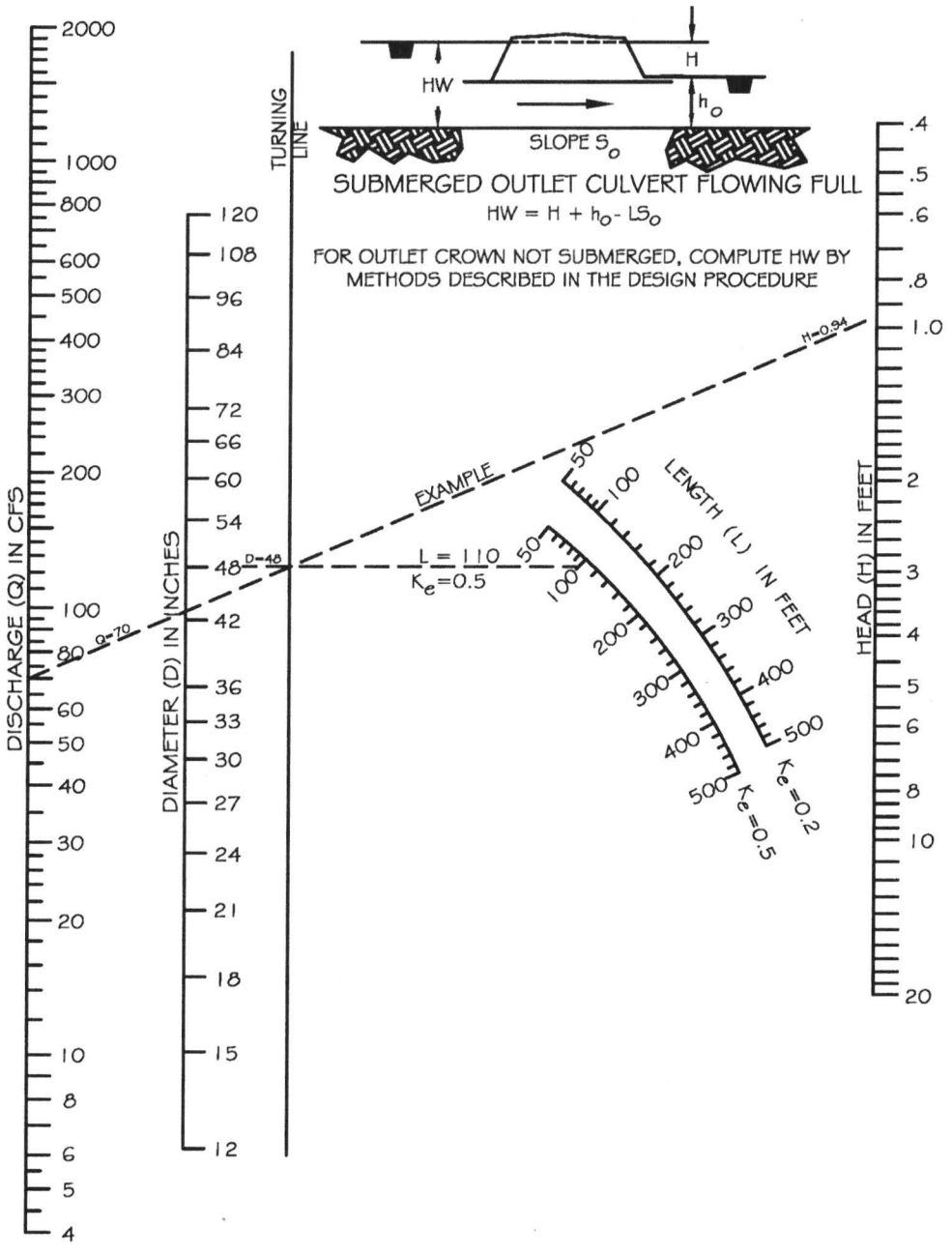

HEAD FOR CULVERTS (PIPE W / "N" = 0.012), FLOWING FULL WITH OUTLET CONTROL

DRAWING NO. 735

Clean Water Services
Our commitment is clear.

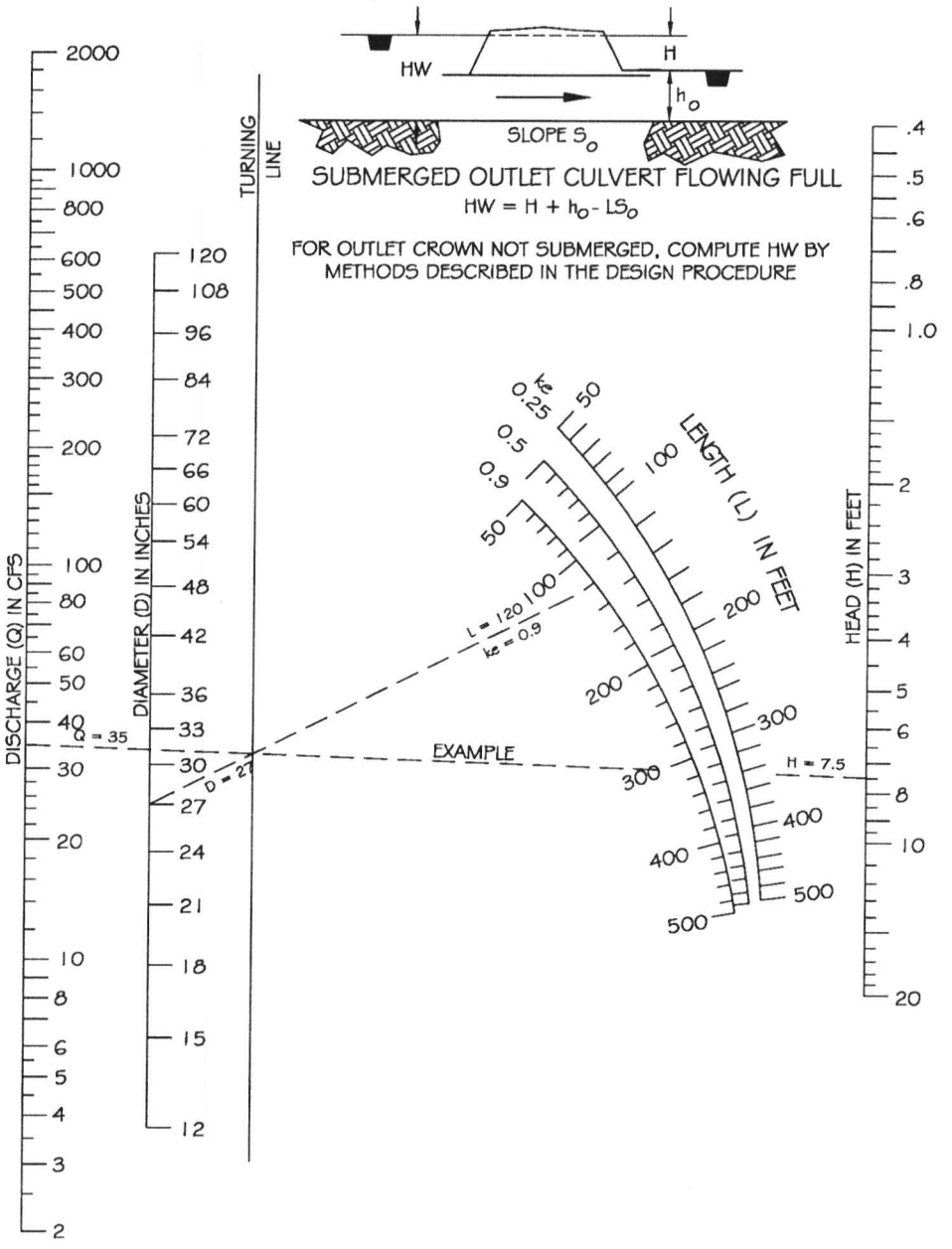

HEAD FOR CULVERTS (PIPE W / "N" = 0.024), FLOWING FULL WITH OUTLET CONTROL

Clean Water Services
Our commitment is clear.

DRAWING NO. 740

TRENCH "A"

TRENCH "B"

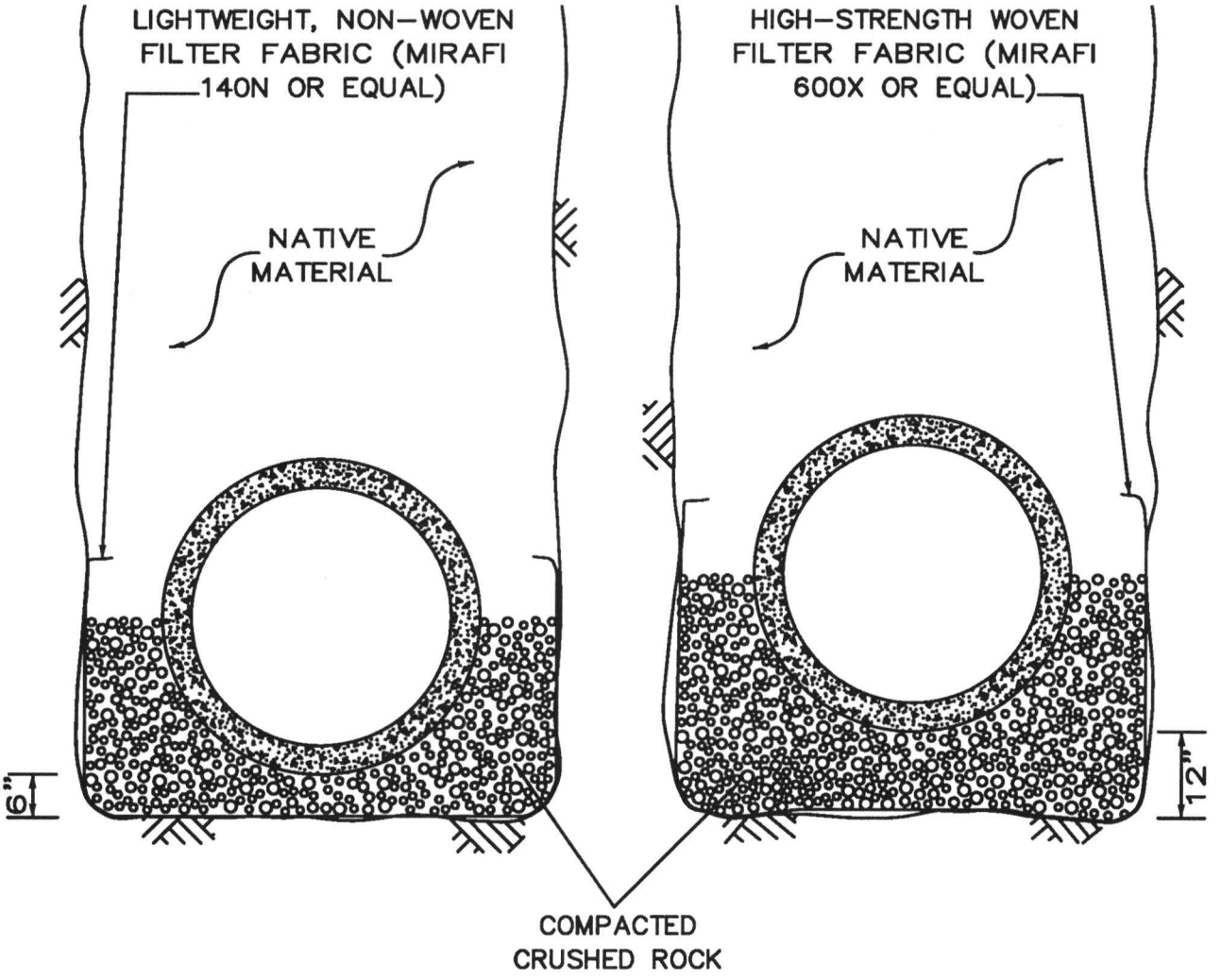

GEOTEXTILE STABILIZATION

DRAWING NO. 1170

REVISED 02-03

Clean Water Services
Our commitment is clear.

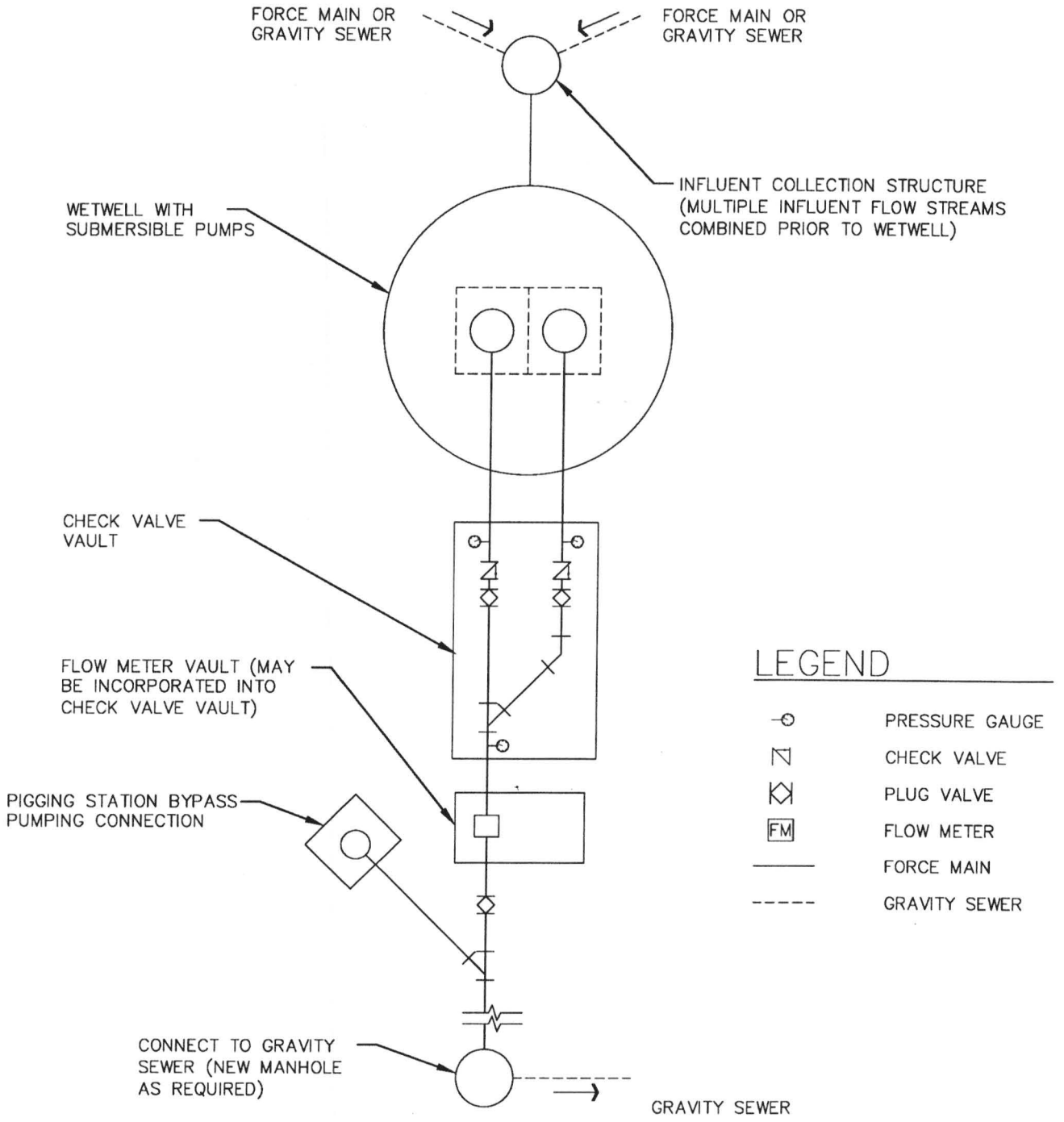

CONCEPTUAL SITE SCHEMATIC

DRAWING NO. 1003

REVISED 12-03

Clean Water Services
Our commitment is clear.

CHAIN LINK FENCE AND GATE

DRAWING NO. 1005

REVISED 12-03

MEMBER	NOMINAL DIA (IN)	MATERIAL	
BRACE RAIL	1.660	GALV TUBULAR STL	
GATE FRAME	2.00	GALV TUBULAR STL	
LINE POSTS	2.375	GALV TUBULAR STL	
END & CORNER POST	2.875	GALV TUBULAR STL	
CHAIN LINK FABRIC		9 GA. W/PVC COATING.	
	GATE OPENING (ft)	NOMINAL DIA (IN)	MATERIAL
GATE POST	12' OR 15'	4	GALV TUBULAR STL

NOTES:

1. ALL FITTINGS, FASTENERS, & AND FABRIC TIES SHALL BE HOT DIP GALV.
2. CONC SHALL BE MIN 2500 PSI @ 28 DAYS.
3. PROVIDE BRACE RAIL BETWEEN END POSTS AND LINE POSTS. LENGTHS AS REQ'D.
4. PROVIDE GATE STOPS AND DROP RECEIVERS SET IN CONCRETE, EACH GATE.
5. PROVIDE EXTENSION ARMS ON LINE, END AND CORNER POSTS & GATE POSTS AS REQ'D.
6. PROVIDE SIGHT OBSCURING SLATS WITH ALL WASTEWATER PUMP STATIONS.
7. CENTER BRACE RAIL NOT REQUIRED WITH FENCE HEIGHT OF 5' OR LESS.

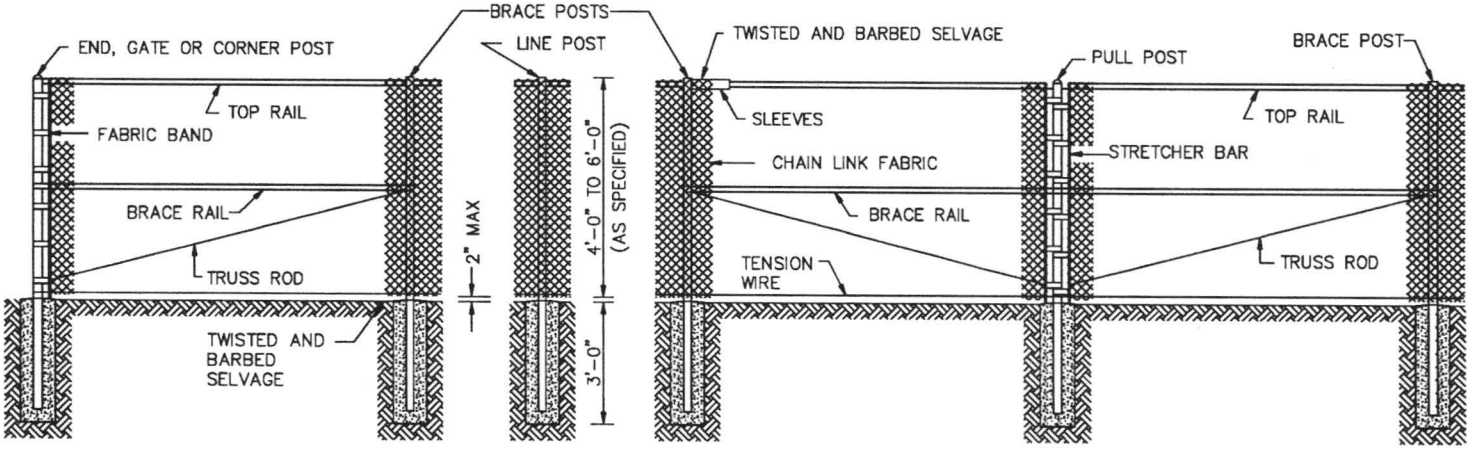

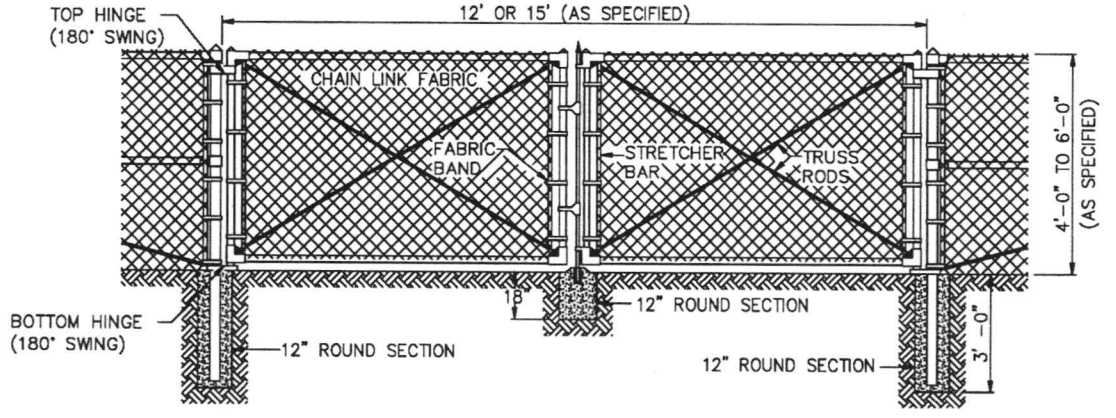

Clean Water Services

Our commitment is clear.

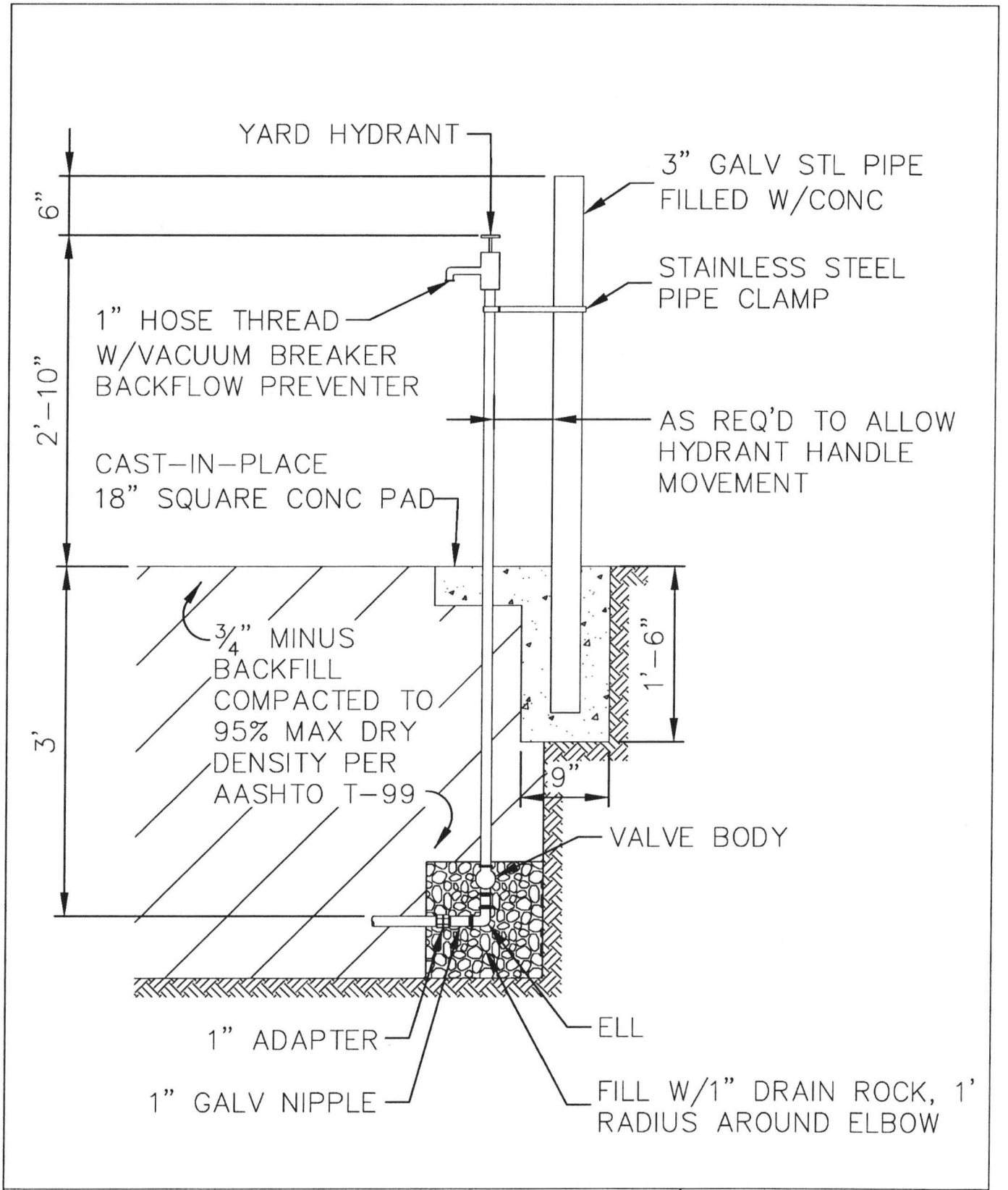

YARD HYDRANT

DRAWING NO. 1009

REVISED 12-03

Clean Water Services
Our commitment is clear.

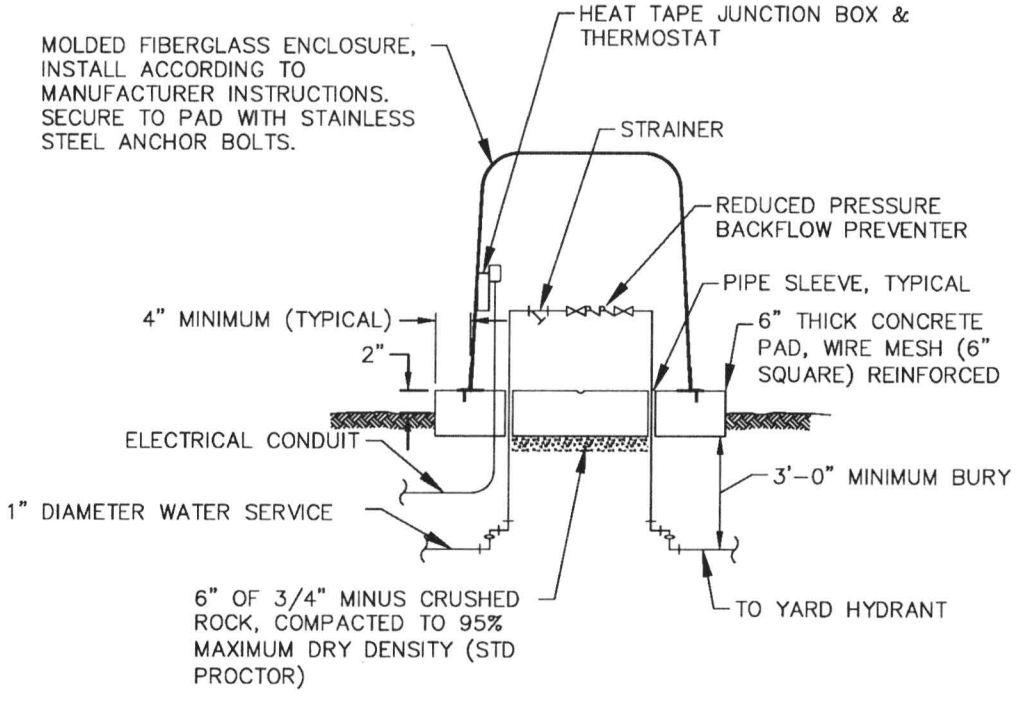

NOTE:

1. WRAP EXPOSED WATER PIPE WITH HEAT TAPE AND PVC COATED PIPE INSULATION.

REDUCED PRESSURE BACKFLOW PREVENTER

DRAWING NO. 1011

REVISED 12-03

Clean Water Services
Our commitment is clear.

ELECTRICAL
ONE-LINE DIAGRAM

DRAWING NO. 1071

REVISED 12-03

Clean Water Services
Our commitment is clear.

	PANELBOARD NO:	LOAD CENTER													
	VOLTAGE:	120/240		BUS RATING (A):				100			ENCLOSURE:	NEMA 1			
	PHASE:	1		MAIN OC DEVICE:				60/2			MOUNTING:	SURFACE			
	WIRE:	3+GND		INTERRUPTING RATING (KA):				10			LOCATION:	ENCLOSURE 1			
	200% NEUTRAL:	NO		SERVICE ENTRANCE LABEL:				NO							
CKT		CONNECTED LOAD (VA)				OCP			OCP		CONNECTED LOAD (VA)					CKT
NO.	DESCRIPTION	LTS	REC	MECH	MISC	AMPS	P		AMPS	P	LTS	REC	MECH	MISC	DESCRIPTION	NO.
1	CONTROL POWER				600	20	1	A	20	1		360			WEATHER PROOF DUPLEX	2
3	ENCLOSURE 1 LIGHTS & HEATER	300				20	1	B	20	1		300			AUTO DIALER	4
5	ENCLOSURE 1 DUPLEX OUTLET		360			20	1	A	20	1				100	FLOW TRANSMITTER	6
7	ENCLOSURE 2 LIGHTS & HEATER	300				20	1	B	20	1				100	WETWELL LEVEL	8
9	ENCLOSURE 2 DUPLEX OUTLET		360			20	1	A	20	1				1,000	GENERATOR BATTERY CHARGER	10
11	SPACE					20	1	B	20	1				1,500	GENERATOR BLOCK HEATER	12

LOAD SUMMARY

	LTS	REC	MECH	MISC	SPARE	TOTAL				PHASE BALANCE	
CONNECTED LOAD (KVA)	0.6	1.4	0.0	3.3	---	5.3		240	LINE-TO-LINE VOLTS	PHASE A (KVA)	###
DEMAND FACTOR	1.25	NEC	1.00	1.00	20%	---		22	CONNECTED AMPS	PHASE B (KVA)	###
DESIGN LOAD (KVA)	0.8	1.4	0.0	3.3	1.1	6.5		27	DESIGN AMPS		

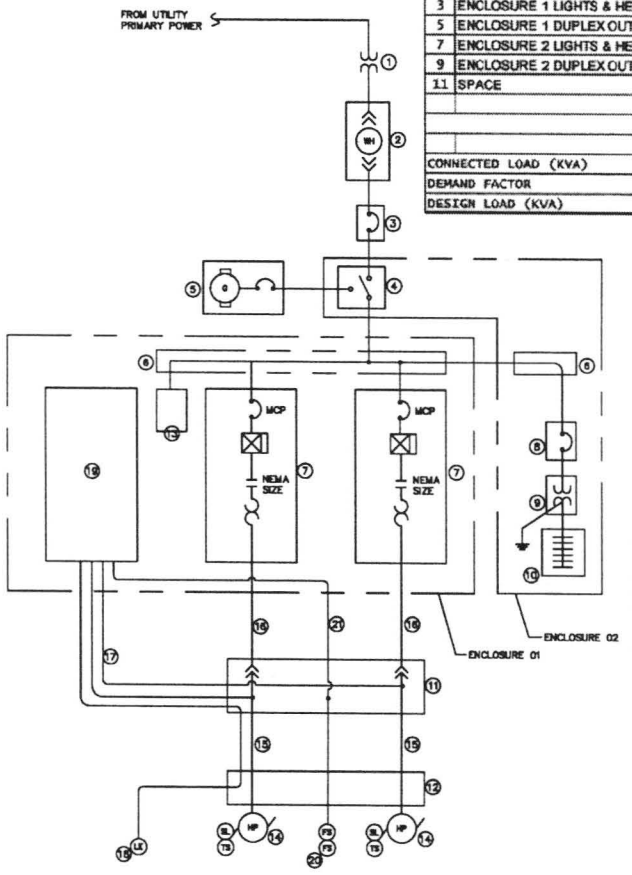

1 ONE-LINE DIAGRAM
SCALE: NTS

KEY NOTES:

ITEM	DESCRIPTIONS	COMMENTS
1	UTILITY XMFR POWER	480V, 3PHASE, 4W, 60HZ UNDERGROUND SECONDARY SERVICE
2	METER ENCLOSURE	PER UTILITY STANDARDS
3	MAIN SERVICE BREAKER	SUITABLE FOR SERVICE ENTRANCE
4	AUTOMATIC TRANSFER SWITCH	
5	STANDBY GENERATOR	PROVIDED WITH IN-LINE BREAKER
6	POWER DISTRIBUTION BLOCK	480V, 3PHASE
7	COMBINATION MOTOR STARTER PANEL	PROVIDED WITH AMMETER
8	DRY TYPE XMFR PRIMARY BREAKER	
9	DRY TYPE XMFR	MIN 3 KVA, 480V-120/240V, 1PH
10	LOAD CENTER	MIN 100AMPS, 120/240V, 1PH, 3W, 12 POLES
11	DISCONNECT AIR GAP J-BOX	AIR GAP JUNCTION BOX CONFIGURATION
12	UNDERGROUND CABLE TRENCH	
13	3-PHASE SECONDARY SURGE ARRESTOR	
14	PUMP SUBMERSIBLE MOTOR	MOTOR PROVIDED WITH MOTOR OVER TEMP AND SEAL LEAK
15	PUMP SUBMERSIBLE POWER AND CONTROL CABLES	SUPPLIED BY PUMP MFR
16	PUMP POWER WIRES	PROVIDE IN CONDUITS
17	PUMP CONTROL WIRES	PROVIDE IN CONDUITS
18	ULTRASONIC	CABLE BY MFR, NO SPLICE
19	PUMP CONTROL PANEL	
20	FLOATS	OVER FLOW AND HIGH LEVEL
21	FLOAT CONTROL WIRES	

LEGEND:

MTR	MOTOR
SL	SEAL LEAK
TS	MOTOR OVER TEMP SWITCH
MCP	MOTOR CIRCUIT PROTECTOR

ELECTRICAL
INTERIOR ENCLOSURE–01

DRAWING NO. 1072

REVISED 12–03

Clean Water Services
Our commitment is clear.

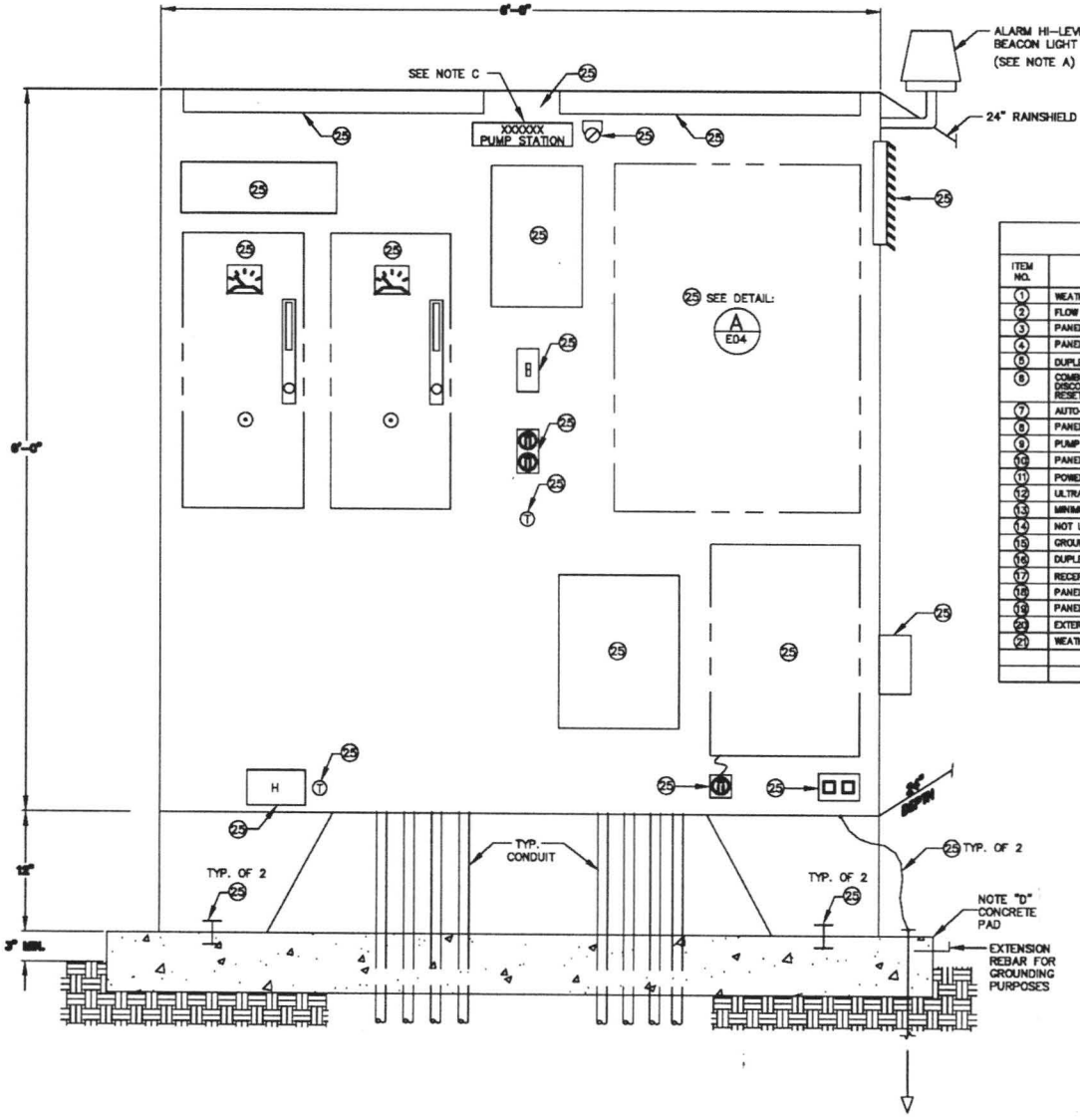

KEYED NOTES & COMMENTS:

ITEM NO.	DEVICE	COMMENTS
1	WEATHER PROOF ENCLOSURE	
2	FLOW TRANSMITTER	
3	PANEL HEATER	
4	PANEL HEATER THERMOSTAT	
5	DUPLEX TELEPHONE JACK	RADIO SHACK # 279–446
6	COMBINATION MOTOR STARTER, LOCKABLE DISCONNECT, AMMETER AND OVERLOAD RESET	
7	AUTO–DIALER	PROVIDED WITH POWER CORD
8	PANEL LIGHT ON/OFF	SWITCH ACTIVATED BY DOOR OPENING
9	PUMP CONTROL PANEL	
10	PANEL FLUORESCENT LIGHTS	
11	POWER DISTRIBUTION BLOCK	
12	ULTRASONIC CONTROLLER	
13	MINIMUM 1/2" ANCHOR BOLTS	STAINLESS STEEL
14	NOT USED	
15	GROUND RODS & GROUND WIRE, #1	
16	DUPLEX RECEPTACLE	
17	RECEPTACLE FOR AUTO–DIALER	
18	PANEL EXHAUST FAN WITH FILTER	
19	PANEL EXHAUST THERMOSTAT	
20	EXTERIOR POLE LIGHT SWITCH	
21	WEATHERPROOF DUPLEX OUTLET	

GENERAL NOTES

A HIGH LEVEL ALARM, EXTERIOR BEACON LIGHT MOUNTED ON TOP OF PANEL. MUST BE SEEN FROM STREET LEVEL. FIELD ADJUST HEIGHT AS REQUIRED.

B INTERIOR RACEWAY ROUTING BETWEEN PANELS WITHIN ENCLOSURES SHALL BE WELL COORDINATED AND SHALL BE RGS TYPE.

C PROVIDE DESIGNATED PUMPSTATION NAMEPLATE OUTSIDE ENCLOSURE i.e. XXXX PUMPSTATION.

D PAD DETAILS AND CONNECTION TO PAD SHOULD BE DESIGNED TO RESIST SEISMIC AND WIND LOADS. THE DETAILS SHOWN SHOULD BE CONSIDERED MINIMUMS.

ELECTRICAL
INTERIOR ENCLOSURE–02

DRAWING NO. 1073

REVISED 12–03

CleanWater Services
Our commitment is clear.

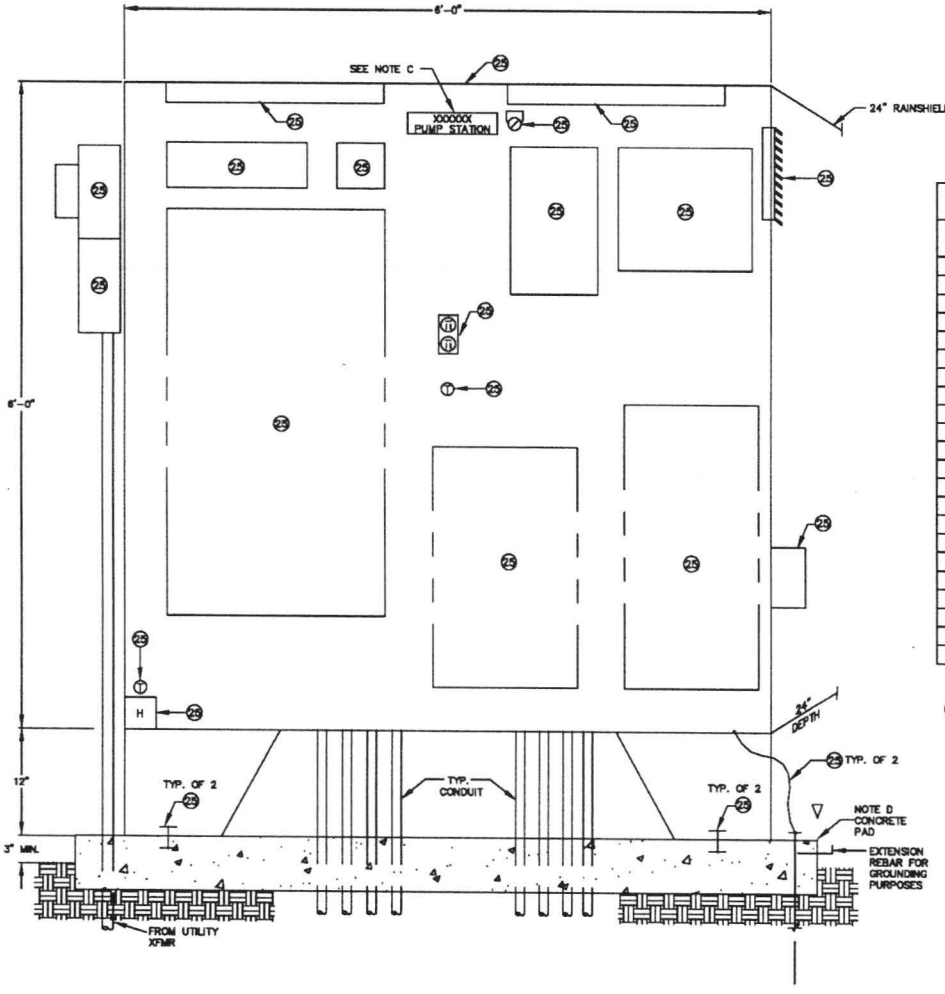

1 ELECTRICAL ENCLOSURE – 02
SCALE: 2"=1'-0" (SEE NOTE 3)

KEYED NOTES & NAMEPLATE DESIGNATIONS:

ITEM NO.	DEVICE	NAMEPLATE
1	WEATHER PROOF ENCLOSURE	PUMP STATION XXXX
2	LOAD CENTER	LOAD CENTER
3	PANEL HEATER	
4	PANEL HEATER THERMOSTAT	
5	3–PHASE SECONDARY SURGE ARRESTOR	SURGE ARRESTOR
6	DRY TYPE XMFR PRIM BREAKER	DRY TYPE XMFR PRIM BREAKER
7	DRY TYPE XMFR	
8	O & M RACK	O & M RACK
9	DUPLEX RECEPTACLE	CIRCUIT XX
10	PANEL FLOURESCENT LIGHTS	
11	POWER DISTRIBUTION BLOCK	
12	AUTOMATIC TRANSFER SWITCH	AUTOMATIC TRANSFER SWITCH
13	WEATHERPROOF DUPLEX OUTLET	CIRCUIT XX
14	PANEL LIGHT ON/OFF	ACTIVATED BY DOOR OPENING
15	GROUND RODS & GROUND WIRE, #1	
16	NOT USED	
17	NOT USED	
18	PANEL EXHAUST FAN w/FILTER	
19	PANEL EXHAUST THERMOSTAT	
20	MINIMUM 1/2" ANCHOR BOLT	
21	"METER–MAN" POWER METER BASE PER PGE STANDARDS	
22		

GENERAL NOTES:

A NOT USED

B INTERIOR RACEWAY ROUTING BETWEEN PANELS WITHIN ENCLOSURES SHALL BE WELL COORDINATED AND SHAL BE RGS TYPE.

C PROVIDE DESIGNATED PUMP STATION NAMEPLATE OUTSIDE ENCLOSURE i.e. XXXX PUMP STATION.

D PAD DETAILS AND CONNECTION TO PAD SHOULD BE DESIGNED TO RESIST SEISMIC AND WIND LOADS. THE DETAILS SHOWN SHOULD BE CONSIDERED MINIMUMS.

ELECTRICAL
CONTROL PANEL DETAIL

DRAWING NO. 1074

REVISED 12-03

36"X30"X8"
ENCLOSURE

33"X27
BACKPANEL

(A) PUMP SEQUENCE CONTROL PANEL (PSPC) – FRONT DETAIL

SCALE: NTS

SEE SHEET E02

KEYED NOTES & NAMEPLATE DESIGNATIONS (PSCP):

ITEM NO.	DEVICE	NAMEPLATE
[illegible]	PUMP SEQUENCE CONTROL PANEL	PUMP CONTROL PANEL
[illegible]	SELECTOR SWITCH	CONTROL POWER ON/OFF
[illegible]	GREEN LIGHT	CONTROL POWER ON
[illegible]	RUN TIME METER	-
[illegible]	-	PUMP 1
[illegible]	-	PUMP 2
[illegible]	RED LIGHT	RUNNING
[illegible]	SELECTOR SWITCH	H-O-A
[illegible]	ALTERNATOR SELECTOR SWITCH	LEAD SELECTOR PUMP1-ALT-PUMP2
[illegible]	AMBER LIGHT	SEAL LEAK
[illegible]	RESET PUSHBUTTON	OVER TEMP RESET
[illegible]	AMBER LIGHT	MOTOR OVER TEMP
[illegible]	RELAYS, 2 POLE	
[illegible]	RELAYS, 4 POLE	
[illegible]	TIMER, OFF DELAY	
[illegible]	TIMERS, ON DELAY	
[illegible]	ALTERNATING RELAY	
[illegible]	SEAL LEAK DETECTOR	
[illegible]	INTRINSICALLY SAFE RELAYS	
[illegible]	FLOAT SWITCHES, IND	
[illegible]	TERMINALS, PUMP SEQ OF [illegible]	
[illegible]	TERMINALS, SEAL LEAK & OVERTEMP [illegible]	
[illegible]	TERMINALS, INTRINSICALLY SAFE [illegible]	
[illegible]	PUSHBUTTON, 1 N.O., 1 N.C.	HIGH LEVEL ALARM TEST
[illegible]	SELECTOR SWITCH, 2 POS, 1 N.O., 1 N.C.	HIGH LEVEL BEACON ALARM ENABLE-DISABLE
[illegible]	AMBER LIGHT	PUMP FAIL (DISABLED)

CleanWater Services
Our commitment is clear.

ELECTRICAL SEQUENCE CONTROL DIAGRAM

DRAWING NO. 1075

REVISED 12-03

Clean Water Services

Our commitment is clear.

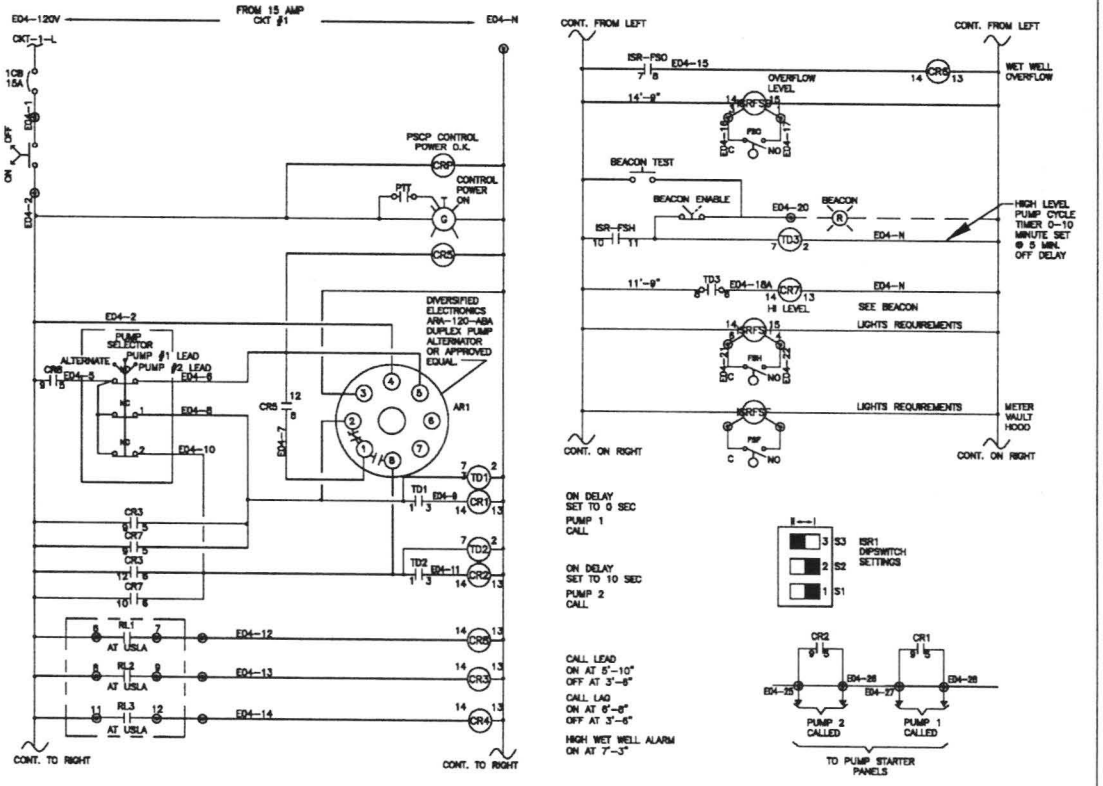

1 PUMP SEQUENCE CONTROL PANEL – CONTROL DIAGRAM (PSCP)

SCALE: NTS

KEYED NOTES:

① THIS IS REPRESENTATIVE OF PUMP TECH-WARRICK PUMP MONITOR UNIT FOR MOTOR SEAL LEAK DETECTION. CONTRACTOR IS RESPONSIBLE FOR INSTALLING THE UNIT PER THE PUMP MANUFACTURER'S RECOMMENDATIONS, AND TO PROVIDE ACCESSORIES AND CONNECTIONS TO PLACE THE ACTUAL PUMP FURNISHED INTO FULL OPERATION WITH LEAK PROTECTION. FIELD INSTALL UNIT IN STARTER PANEL.

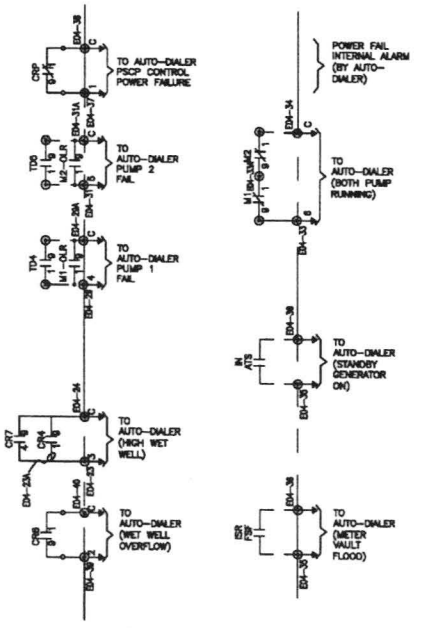

2 AUTO DIALER INPUT

SCALE: NTS

ELECTRICAL
PUMP CONTROL DIAGRAMS

DRAWING NO. 1076

REVISED 12-03

Clean Water Services
Our commitment is clear.

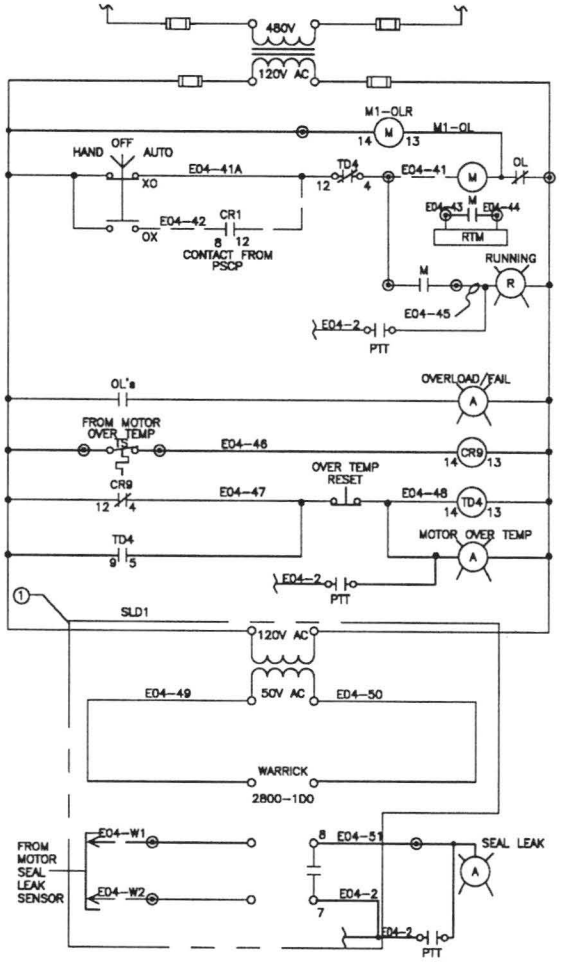

1 CONTROL DIAGRAM MOTOR STARTER SUBMERSIBLE PUMP #1

SCALE: NTS

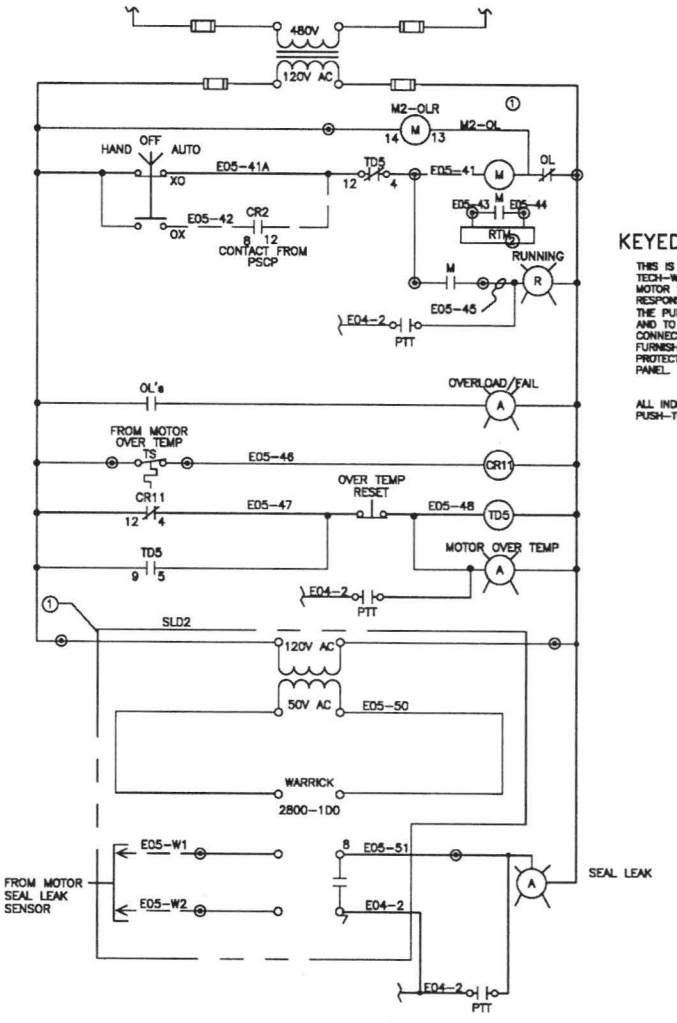

2 CONTROL DIAGRAM MOTOR STARTER SUBMERSIBLE PUMP #2

SCALE: NTS

KEYED NOTES:

THIS IS REPRESENTATIVE OF PUMP TECH-WARRICK PUMP MONITOR UNIT FOR MOTOR SEAL LEAK DETECTION. CONTRACTOR IS RESPONSIBLE FOR INSTALLING THE UNIT PER THE PUMP MANUFACTURER'S RECOMMENDATIONS, AND TO PROVIDE ACCESSORIES AND CONNECTIONS TO PLACE THE ACTUAL PUMP FURNISHED INTO FULL OPERATION WITH LEAK PROTECTION. FIELD INSTALL UNIT IN STARTER PANEL.

ALL INDICATING PILOT LIGHTS SHALL BE PUSH-TO-TEST AND LED LAMP TYPE.

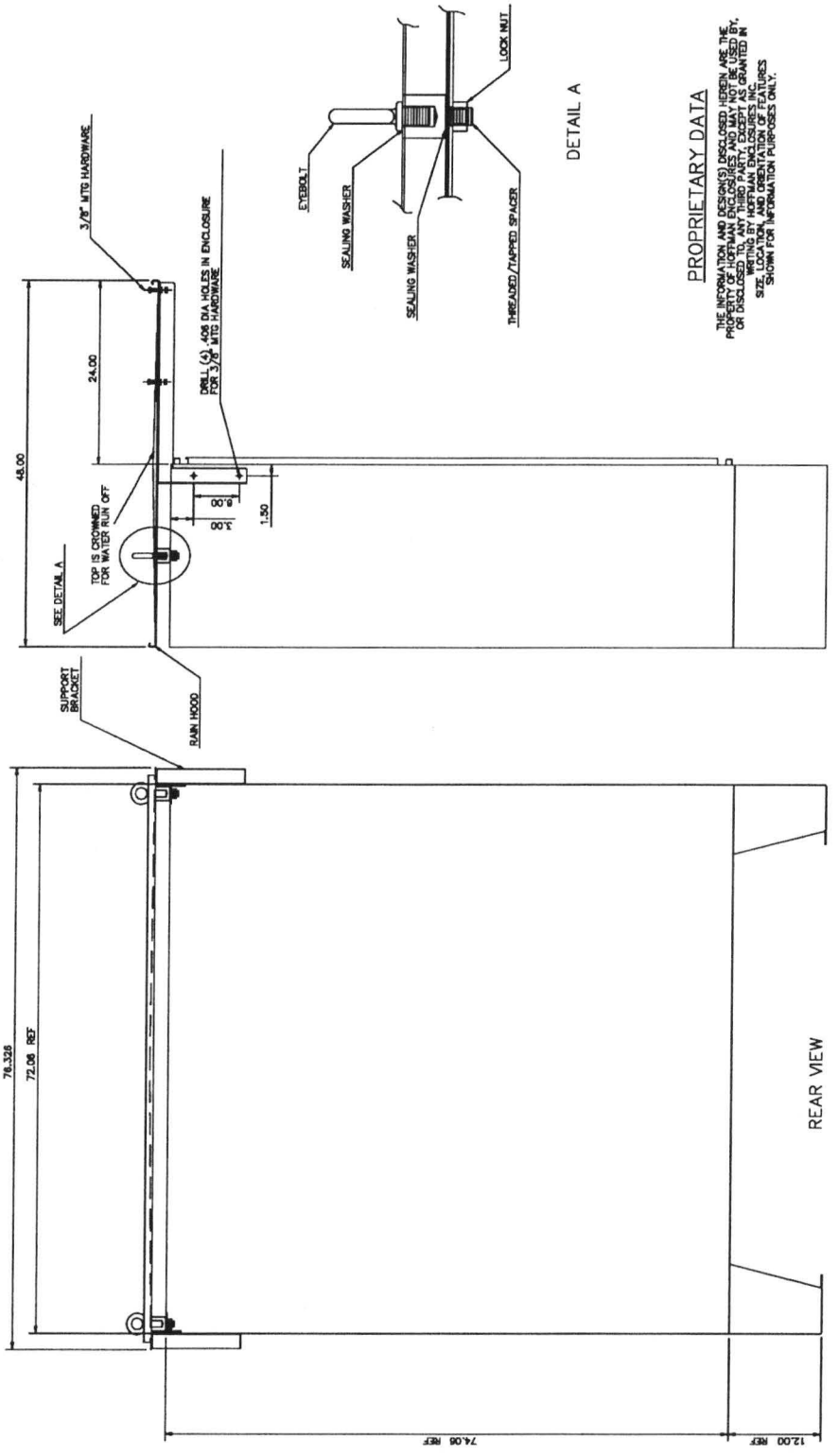

PROPRIETARY DATA

THE INFORMATION AND DESIGN(S) DISCLOSED HEREIN ARE THE PROPERTY OF HOFFMAN ENCLOSURES AND MAY NOT BE USED BY, OR DISCLOSED TO, ANY THIRD PARTY, EXCEPT AS GRANTED IN WRITING BY HOFFMAN ENCLOSURES. THEY ARE LOANED SUBJECT TO RETURN ON REQUEST. SIZE, LOCATION, AND ORIENTATION OF FEATURES SHOWN FOR INFORMATION PURPOSES ONLY.

NOTES:

1. ENCLOSURE TO BE A HOFFMAN CUSTOM NEMA 3R A7272240SSLPSPC ENCLOSURE WITH CUSTOM RAINHOOD AND CUSTOM L30 PADLOCKING HANDLE. SUPPORT BRACKETS, SPACERS & MTG HARDWARE.
2. DOORS NOT SHOWN.

ELECTRICAL ENCLOSURE RAINSHIELD DETAIL REFERENCE

DRAWING NO. 1077

REVISED 12-03

Clean Water Services
Our commitment is clear.

ELECTRICAL
INTRINSICALLY SAFE
EXAMPLE DRAWING

DRAWING NO. 1078

REVISED 12-03

Clean Water Services

Our commitment is clear.

ELECTRICAL

WETWELL LEVEL DETAIL

DRAWING NO. 1079

REVISED 12-03

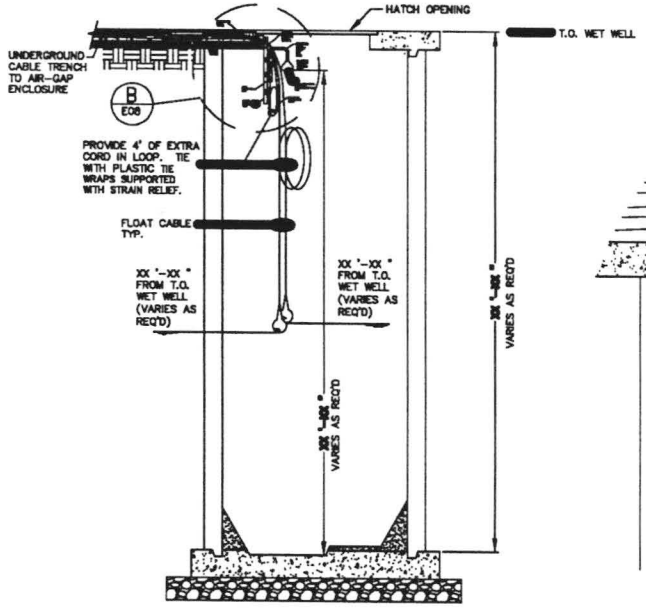

A WETWELL LEVEL DETAIL

SCALE: 1/2"=1'-0"

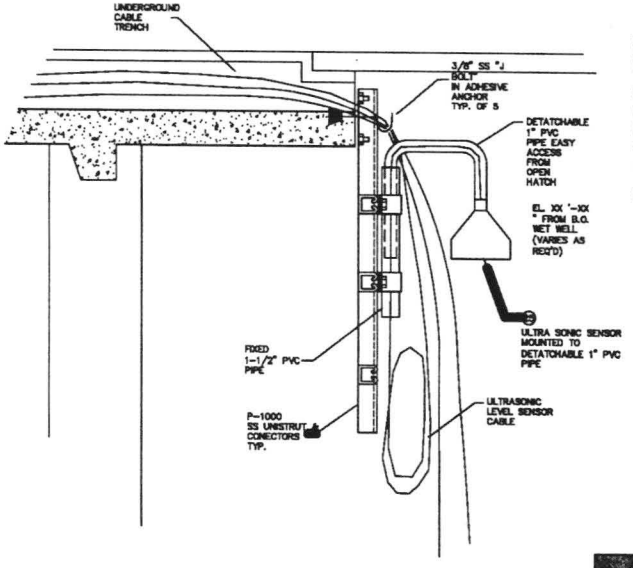

B SENSOR MOUNTING DETAIL

SCALE: 3"=1'-0"

KEYED NOTES:

① INSTALL ULTRASONIC SENSOR THAT CAN BE ACCESSIBLE AND REMOVEABLE FROM THE WETWELL ACCESS HATCH.

REFERENCE:

PUMP LEVEL OPERATING RANGE MUST BE PROGRAMMED IN ULTRASONIC TRANSMITTER (FROM BOTTOM OF WETWELL).

LEAD PUMP OFF: XX '-XX "

LAG PUMP OFF: XX '-XX "

LEAD PUMP ON: XX '-XX "

LAG PUMP ON: XX '-XX "

HI LEVEL ALARM: XX '- XX"

(FILL IN PUMP OPERATION ELEVATIONS AS REQ'D.)

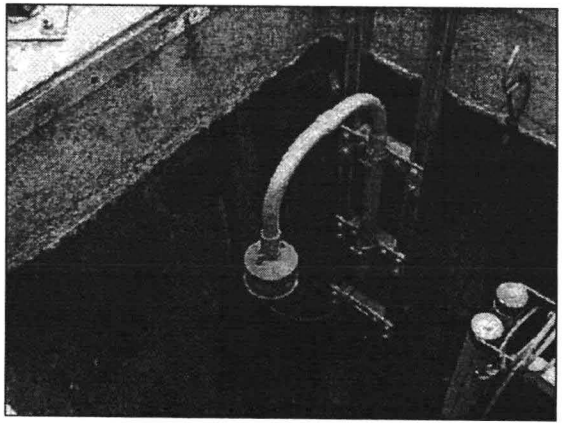

C MOUNTED SENSOR

NTS

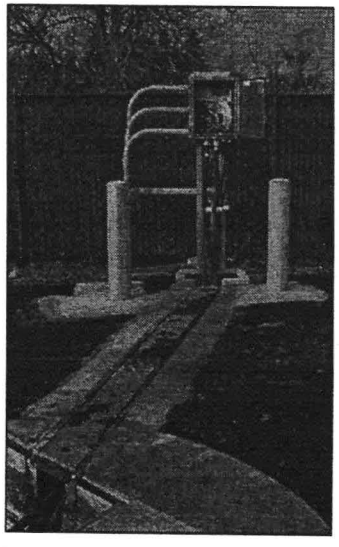

D CABLE TRENCH

NTS

Clean Water Services

Our commitment is clear.

ELECTRICAL
DISCONNECT AIR-GAP
JUNCTION BOX DETAILS

DRAWING NO. 1080

REVISED 12-03

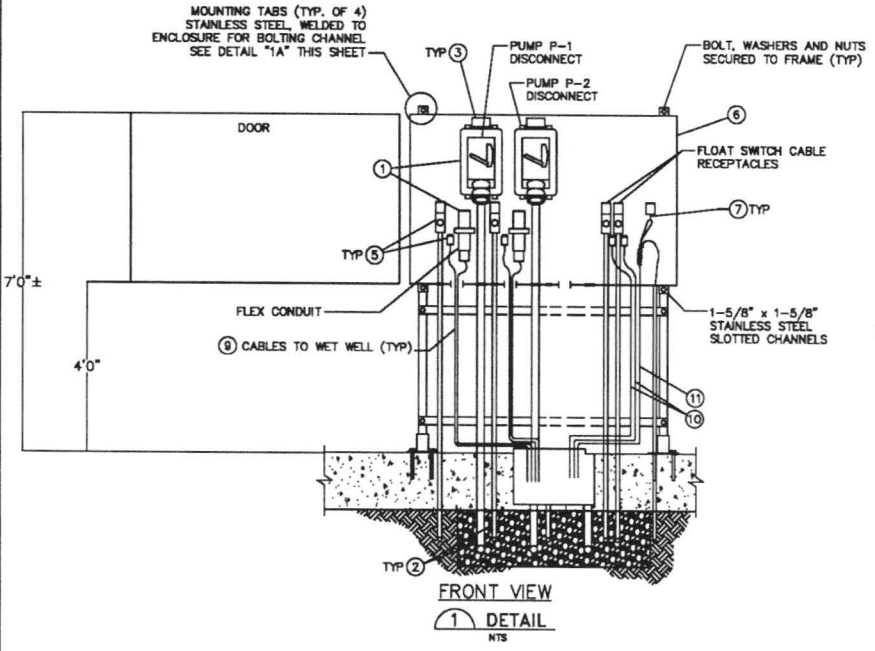

FRONT VIEW

1 DETAIL
NTS

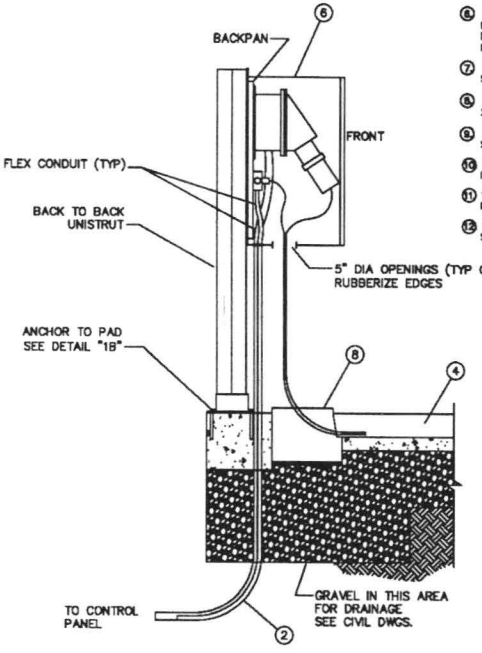

SIDE VIEW

2 DETAIL
NTS

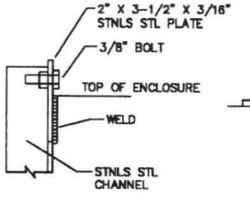

1a DETAIL
NTS

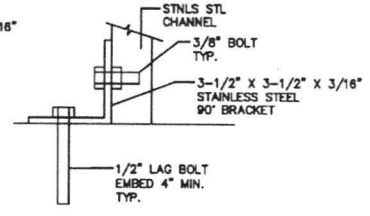

1b DETAIL
NTS

KEYED NOTES:

1. PIN & SLEEVE INTERLOCK. 480V, 3P, 4W. HUBBELL WITH MATCHING PLUG. (2 REQ'D)
2. CONDUITS TO STARTERS AND PUMP SEQUENCE CONTROL PANEL. NOTE POWER AND CONTROL CONDUCTORS IN SEPARATE CONDUITS. ROUTE CONDUITS DOWN INTO GROUND.
3. INSTALL EQUIPMENT NAME PLATES ABOVE EACH SWITCH AND RECEPTACLE.
4. CABLE CHANNEL TO WET WELL, SYNERTECH MOULDED PRODUCTS MODEL NO 68 PLASTIBETON CHANNEL SYSTEM COMPLETE WITH COVER AND SMC DIVIDER TO PARTITION POWER CABLES FROM INSTRUMENTATION CABLES. SEE CIVIL DWGS.
5. PROVIDE 3P, 4W, 20A, 125V SINGLE LOCKING RECEPTACLE IN CAST OUTLET BOX WITH WEATHERPROOF COVER. PROVIDE MATCHING PLUG ARROW-HART 8400 AND 8402 OR EQUAL.
6. 36"H X 36"W X 20"D (MIN), NEMA 3R STAINLESS ENCLOSURE WITH TWO (2) QUARTER TURN, PADLOCKABLE HANDLES ENCLOSURE BY FOUCH ELECTRIC MANUF. CO., (503) 284-1415.
7. PROVIDE J-HOOKS & KELLUMS GRIPS TO SUPPORT ALL FLEXIBLE CORDS.
8. CONCRETE HANDHOLE. 30"L X 24"W X 24"D. 2" THICK, MIN., WITH REINFORCING WIRE MESH.
9. VENDOR CABLES (POWER AND CONTROL) TO SUBMERSIBLE PUMPS LOCATED IN WET WELL.
10. VENDOR CALBES TO FLOAT SWITCHES MOUNTED IN WET WELL.
11. VENDOR CALBES TO ULTRASONIC LEVEL TRANSDUCER MOUNTED IN WET WELL.
12. ALL HARDWARE, FRAMEWORK, ETC., SHALL BE STAINLESS STEEL.

Clean Water Services

Our commitment is clear.

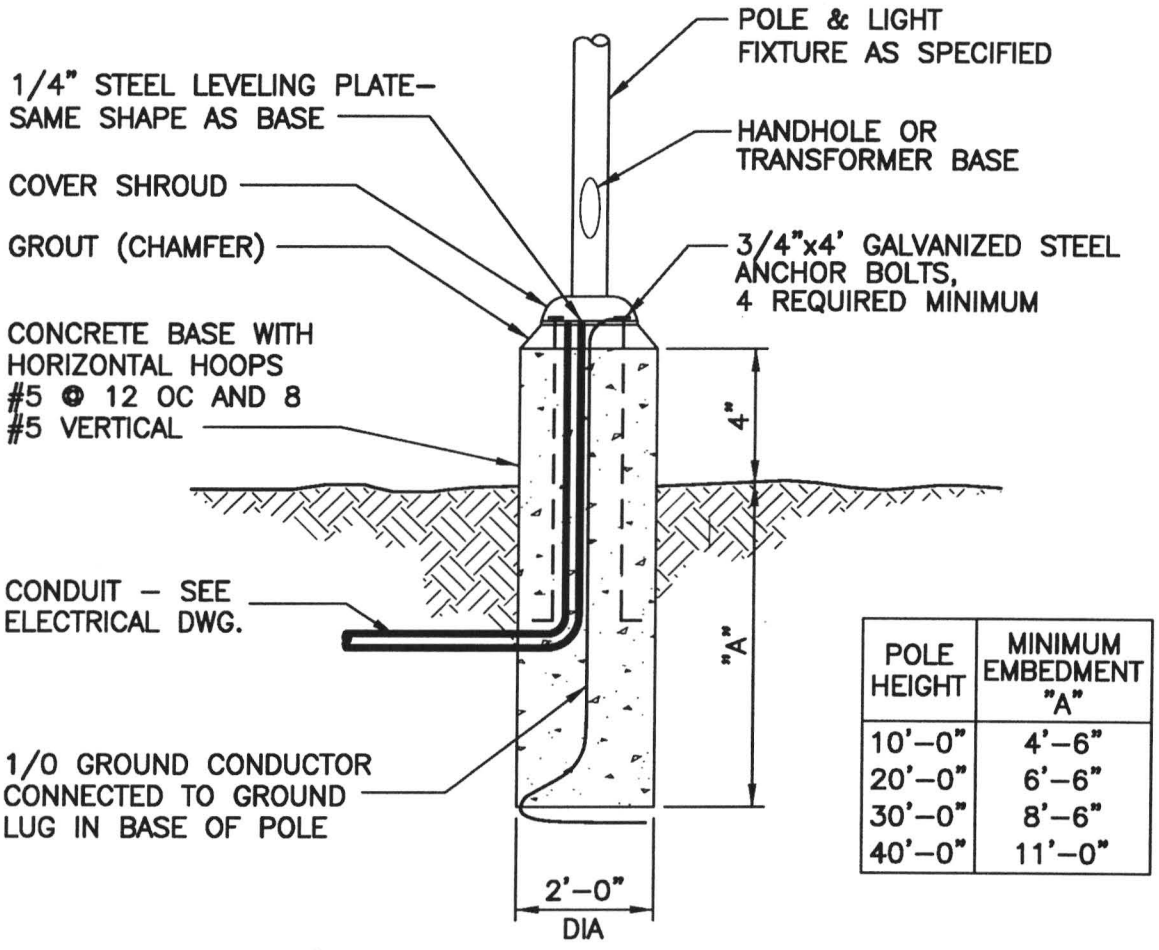

POLE HEIGHT	MINIMUM EMBEDMENT "A"
10'–0"	4'–6"
20'–0"	6'–6"
30'–0"	8'–6"
40'–0"	11'–0"

TYPICAL LIGHT POLE BASE

ELECTRICAL LIGHT POLE DETAIL

DRAWING NO. 1081

REVISED 12–03

Clean Water Services
Our commitment is clear.